Bureau of Water

South Carolina Department of Health and Environmental Control

Public Swimming Pools

Regulation 61-51

Published as final in the State Register June 27, 2014.

D H E C

PROMOTE PROTECT PROSPER

www.scdhec.net

On June 27, 2014, Regulation 61-51 was amended. This copy is a reprint of the State Register version and reflects R.61-51 in its entirety. If there are inconsistencies between this version and the version printed in the State Register, the State Register version takes priority. The State Register's internet web site is: http://www.scstatehouse.gov/state_register.php

Authority for this regulation comes from Sections 44-1-140(7) and 44-55-2310 et seq. of the 1976 South Carolina Code of Laws. For questions, contact DHEC at:

Bureau of Water
Attn: Recreational Waters Division
2600 Bull Street
Columbia, SC 29201
(803) 898-4300

A. DEFINITIONS 6
B. CONSTRUCTION AND OPERATING PERMITS 12
1. Applicability. 12
2. Construction Permit. 12
3. Application for Permit to Construct. 12
4. Plans and Specifications. 12
5. Design/Equipment Changes. 14
6. Piping Inspection. 14
7. Final Approval. 14
8. Fees. 15
9. Repeat Inspections. 15
10. Construction Contractor. 15
11. Permit Terms. 15
C. GENERAL CONSTRUCTION REQUIREMENTS FOR ALL PUBLIC SWIMMING POOLS 16
1. Applicability. 16
2. Water Supply. 16
3. Sanitary Sewage. 16
4. Location. 16
5. Material and Finish. 17
6. Pool Decks. 17
7. Depth Markers. 19
8. Fences. 20
9. Equipment Room. 20
10. Chemical Storage. 21
11. Drinking Fountain. 21
12. Emergency Notification Device. 21
13. Bathhouse Facilities. 22
14. Minimum Toilet Facilities. 23
15. Filtration System. 23
16. Filter Backwash. 24
17. Pool Drainage. 24
18. Rate of Flow Indicator. 25
19. Heater. 25
20. Pump and Motor. 25
21. Water Treatment. 25
22. Separate System. 26
23. Automatic Controller. 26
24. Piping. 26
25. Pool Inlets and Outlets. 27
26. Overflow/Skimming Devices. 28
27. Safety Equipment. 31
28. Signs. 31
29. Main Drains. 33
30. Overflow. 34
31. Electrical and Illumination Requirements. 34

32. Instructions For Operation. 35
33. Equipment Acceptance. 35
34. Swimming and Deck Limits. 35
35. Steps and Ladders. 36
36. Construction Variance. 38
37. Bridges. 38
38. Portable Kiddie Slides. 38
39. Surge tank. 38
D. PUBLIC SWIMMING POOL DESIGN REQUIREMENTS FOR TYPE “A” AND “B”, AND “G” POOLS 39
1. Applicability. 39
2. Pool Depths. 39
3. Diving Towers, Stands, and Sliding Boards. 43
4. Recirculation System. 43
5. Vacuum Lines. 43
6. Pool Deck. 43
7. Pool Width. 44
8. Type “G” Pools. 44
E. DESIGN REQUIREMENTS FOR TYPE “C” POOLS 45
1. Applicability. 45
2. Type “C” Pools. 45
3. Spray Pools. 45
4. Recirculation System. 45
5. Pool Deck. 46
6. Sliding Boards. 46
7. Steps. 46
8. Fill Line. 46
9. Automatic Controllers. 46
F. DESIGN OF TYPE “D” POOLS 47
1. Applicability. 47
2. Type “D” Pools. 47
3. Recirculation System. 47
4. Pool Deck. 48
5. Pool Temperatures. 48
6. Automatic Controllers. 48
G. DESIGN OF TYPE “E” POOLS 49
1. Applicability. 49
2. Type “E” Pools. 49
3. Waterslides and Flumes. 49
4. Lazy Rivers. 51
5. Wave Pool, Activity Pools and Kiddie Play Parks. 51
6. Recirculation System. 51
7. Automatic Controllers. 51
8. Pool Deck. 51
H. DESIGN OF TYPE “F” POOLS 52
1. Applicability. 52

2. Section C Applicable. 52
3. Recirculation System. 52
4. Automatic Controllers. 52
5. Pool Deck. 52
I. EQUIPMENT CHANGES AND ALTERATIONS 53
1. Applicability. 53
2. Structural Changes. 53
3. Equipment Changes. 53
4. Pump and Filter Changes. 53
5. Deck Changes. 53
6. Pool Resurfacing and Painting. 53
7. Piping Changes. 53
8. New Construction. 54
9. Slides. 54
10. Other Changes. 54
J. OPERATION AND MAINTENANCE FOR ALL TYPE POOLS 55
1. Applicability. 55
2. Operating Permits. 55
3. Address and Ownership Changes. 55
4. Housekeeping. 55
5. Water Supply. 55
6. Drinking Water Fountain. 55
7. Sanitary Sewage. 56
8. Equipment Enclosure. 56
9. Recirculation System. 56
10. Accidents. 56
11. Safety Precautions. 56
12. Swimming Limit. 60
13. Water Clarity. 60
14. Water Quality 60
15. Automatic Controllers. 61
16. Pool Temperatures 61
17. Operation Reports. 61
18. Pool Operator 62
19. Depth Markers. 62
20. Bacteriological Quality. 62
21. Inspection of Facilities and Sampling of Pool Water. 62
22. Facility Closure. 62
23. Operating Permit Fees. 63
24. Operation and Maintenance Variance. 63
K. POOL CLOSURES AND ENFORCEMENT. 64
1. Closure of Public Swimming Pools. 64
2. Automatic Controllers. 65
3. Penalties and Enforcement. 65

A. DEFINITIONS

1. "Alteration" means any change in equipment or materials used in the construction of a public swimming pool, after completion which does not conform to the original, permitted plans, specifications, and change orders. Alterations include, but are not limited to, such items as pool or deck resurfacing, painting, equipment changes, and structural additions or deletions.

2. "ASSE" means the American Society of Sanitary Engineering.

3. "Attendant" means a person, 16 years of age or older, who supervises or controls the entrance, exit or other activities of pool patrons. An attendant may not act as a lifeguard.

4. "Automatic Controller" means integrated electrical/electronic equipment, connected to chemical feed equipment, to continuously monitor and control the pH level and chlorine/bromine (O.R.P method or other method acceptable to the Department) residual of swimming pool water.

5. "Bulk Storage" means any chemical storage container greater than fifteen (15) gallons of liquid, or solid chemical greater than the maximum capacity of the feeder.

6. "Certified Public Pool Operator" means someone who holds a valid South Carolina Pool Operator Certificate from a party approved by the Department.

7. "Change Order" means written notification submitted to the Department on a Swimming Pool Change Order Request Form detailing any proposed pool interior coatings, equipment changes or material alterations which do not conform to the original approved plans, specifications, or previously approved change order.

8. "Competition Pool" means a pool designed to be routinely used to host organized swim competitions such as those sponsored by colleges, universities, swim leagues, and swim clubs.

9. "Coping" means the covering which joins the top of the pool wall with the pool decking and is considered part of the minimum pool deck width requirement. If cantilevered deck is employed, the last twelve (12) inches of this deck next to the pool wall shall be considered coping.

10. "Contiguous" means within a one (1) foot horizontal distance.

11. "Department" means the South Carolina Department of Health and Environmental Control.

12. "Diatomaceous Earth" is a type of filter media that is obtained from the fossil remains of microscopic marine plants and is used in a thin coating over filter septa or bags.

13. "Disinfection Equipment" means any device used to supply approved disinfectants to the pool water.

14. “Elevated Structure” means any structure located within a ten (10) foot horizontal distance from the pool edge, which is intended for patron access, and may unintentionally serve as a raised platform for diving or jumping into a pool. This includes, but is not limited to elevated walkways, stairs and landings, balconies, or any construction which is interpreted by the Department as a structure intended for use by patrons that could be used for diving or jumping into a pool. This does not include pool equipment designed for, and approved by the department to be used for diving or jumping into a pool.

15. “Emergency Equipment” means a backboard with straps, two (2) blankets, cervical collars in adult and infant sizes or a commercial head immobilizer.

16. “Filter” means any apparatus containing filter media which is intended to physically remove suspended particles from pool water.

17. “Filter Backwash Piping” means the piping which extends from the backwash outlet of the filter to its terminus at the point of disposal.

18. “Filter Media” means the fine material which entraps the suspended particles as the water passes through the filter.

19. “First Aid Kit” means a water resistant, clearly labeled, latched container providing sufficient first-aid equipment to treat up to fifteen (15) people. The kit will contain as a minimum: alcohol wipes, antibiotic ointment, assorted adhesive bandages, a breathing barrier, a cold pack, gauze, and disposable gloves.

20. “Flow Meter” means a device installed on the pool return pipe (discharge line from filter) to indicate recirculation flow of the pool in gallons per minute (gpm).

21. “gpm” means gallons per minute.

22. “Hand feeding” means the dispensing of any pool chemical manually into the pool.

23. “Heater” means a device through which pool water is circulated to increase the temperature of the water which is specifically designed for pool or spa use.

24. “Hose Bibb” means water faucet with male screw threads to which a hose is attached.

25. “Hybrid Pool” means any pool that has multiple intended use zones such as kiddie play zones, slide landing zones, lazy river zones, and swim zones.

26. “Hydrostatic Relief Valve” means a device, usually installed in the main drains, used to relieve ground water pressure imposed on the outer shell of the pool.

27. “Kiddie Play Park” means wading (kiddie) or spray pools intended to be used exclusively by children where climb-on toys and attractions are provided.

28. “Lifeguard” means a person having the qualifications of and possessing a current American Red Cross, YMCA, or equivalent Lifeguard Certificate, current First Aid Certificate and current CPR (which includes adult, child, and infant) Certificate.

29. “Lifeline Anchors” means the devices recessed in the wall of the pool at the transition point between shallow and deep areas.

30. “Life Saving Equipment Unit” means a coast guard approved ring buoy at least twenty (20) inches in diameter attached to a throwing line having a length of one and one-half (1 ½) times the width of the pool up to a fifty (50) feet maximum length of rope and a life hook of the shepherd’s crook style with minimum twelve (12) foot handle attached with stainless steel nut and bolt. For Type “A” and “E” pools a rescue tube may be used in place of a shepherd’s crook and life ring.

31. “Main Body of the Pool” means the major portion of the pool body excluding any recesses, niches, coves, etc.

32. “Main Drain” means the outlet(s) at the bottom of the pool. These outlets are suction/gravity outlets connected to the recirculation piping.

33. “Main Drain Piping” means the piping connecting the main drain to either the pump suction, surge tank, or the vacuum filter.

34. “Major Fraction” means twenty-five percent (25%) or more.

35. “Minimum Flow Rate” means the least flow of water through the water treatment system that must be maintained to provide adequate treatment and is calculated by dividing the volume of the pool, in gallons, by the required turnover time, in minutes (gallons/minutes).

36. “Normal Operating Level” means the water level at one-half (1/2) the skimmer throat depth or at the gutter lip.

37. “Non-Slip” means having a coefficient of friction of 0.6 or greater when wetted for manufactured tile; or broom finish or other textured finish for concrete as recognized by the American Concrete Institute; or for other surfaces, incorporated features designed to prevent slippage.

38. “Obstruction” means any structure or object which blocks or limits access to the perimeter area of the pool. This includes but is not limited to planters, walls, water features, pillars, etc.

39. “Overflow Gutter” means a device at the normal water level which is used as an overflow and to skim the pool surface, in lieu of a surface skimmer.

40. “Owner” means the owner of the facility or his/her designated agent such as a property manager or on-site representative.

41. “Pool Area” means any area located within the fenced perimeter of the pool to include but not limited to the pool deck. The pool deck will define this area for facilities which do not have a perimeter fence. Where a fence is not required the pool area will include but not be limited to the pool deck.

42. “Pool Deck” means the paved area around the pool which is specifically constructed for use by swimmers.

43. “Pool Depth” means the distance between the floor of the pool and the normal operating level when the pool is in use.

44. “Portable Kiddie Slide” means a single flume slide with a starting height no greater than five (5) feet above the deck, made as a complete unit by a single manufacturer, and intended for use by children, which may be moved when not in use.

45. “Public Swimming Pool or pool” means an artificial structure either above or below the ground surface to provide for such recreational uses as bathing, swimming, diving, wading, spraying, sliding, floating, rafting, or other similar usage which is not built in connection with a single family residence, or duplex (two living units within a single structure) and the use of which is not confined to the family of the residence and their private guests, or which is not owned, constructed, operated, or maintained by a church, synagogue, or religious organization, or facility exempted under Title 45, Chapter 4, of the South Carolina Bed and Breakfast Act. Public swimming pools are listed in the following categories based upon specific characteristics of size, usage, and other factors:

(a) Type “A” means any pool open to the general public, except for Type “E” pools, which does not require a membership or that a person be a guest of a member to gain entrance to the pool, or is not operated solely for and in conjunction with a residential development or a place of lodging.

(b) Type “B” means swimming pools at hotels, motels, apartments, mobile home parks, condominium developments, country clubs, schools, swim clubs, health clubs, campgrounds, subdivisions and other pools of similar usage. Lazy rivers constructed at the above facilities shall be considered Type “B” pools.

(c) Type “C” means wading pools, kiddie pools, spray pools, spray decks, or wet decks. Spray decks, splash pads, or wet decks that use water from a public water system, as defined by R.61-58 State Primary Drinking Water Regulations, and do not recirculate the water are exempt from these regulations.

(d) Type “D” means spa pools and hot tubs. Rehabilitation or therapy pools located at hospitals, sports therapy clinics, doctors offices, or other medical facilities which will be used solely for therapy and rehabilitation purposes and under the supervision of a physical therapist or other qualified medical personnel are excluded from this regulation.

(e) Type "E" means those pools at water parks such as water flumes, water slides, lazy rivers, wave parks, inner tube rides, kiddie play parks, etc. Type "E" also means pools at subdivisions that have a slide that is in use, or not able to be secured to prevent access when not in use. If the slide can be secured to prevent access when not in use, the pool may be open as a type "B" pool when the slide is not in operation and secured.

(f) Type "F" means special purpose pools used exclusively for limited activities such as scuba diving lessons, helmet diving lessons, underwater work training, or similar, limited uses.

(g) Type "G" means hybrid pool.

46. "Recirculation Piping" means the piping from the pool to the filter and return to the pool, through which the water circulates.

47. "Recirculation Pump" means the pump(s) that provide for complete recirculation of pool water through the recirculation piping and filter(s) at a prescribed rate of turnover.

48. "Recirculation System" means a system consisting of pumps, motors, piping, filters, inlets, outlets, disinfecting and other water conditioning equipment and necessary accessories.

49. "Residential Swimming Pool" means any privately owned swimming pool which is built in connection with a single family residence, the use of which shall be confined to the family of the owner and his guests, shall not include any type of cooperative housing or joint tenancy of two or more families, and shall be located within the same property boundary as the family dwelling building to which it serves. Pools constructed in conjunction with a single family rental unit will be considered a residential pool.

50. "Return Inlets" means the fittings or openings through which water is returned to the pool.

51. "Return Piping" means the piping which carries the filtered water under pressure from the filter to the pool.

52. "Shallow End of Pool" means the portion of the pool with water depths of four (4) feet or less.

53. "Spray Pool" or spray deck or wet deck means an artificial structure used to impound water either above or below the ground surface into which treated water is sprayed and recirculated.

54. "Surface Skimmer" means a device used to skim the pool over a self-adjusting weir.

55. "Surface Skimmer Piping" means the piping that carries water from the skimmer to the pump suction, to include the equalizer piping.

56. “Surge Tank” means an approved fixture or device of such material, shape, and capacity as to adequately receive the surge water from indirect or direct overflows, so constructed and located as to be easily cleaned.

57. “Technical Assistance Visit (TAV)” means a comprehensive on-site evaluation by the Department of a public pool to include pool area and associated equipment, operation and maintenance, and a review of current season inspections.

58. “Transition Point” means the point in a pool where the slope changes from one (1) ft. vertical to ten (10) ft. horizontal (1:10) maximum to one (1) ft. vertical to three (3) ft. horizontal (1:3) maximum. This point may separate the deep end from the shallow end.

59. “Turnover Time” means the period of time (usually hours) required to circulate the complete volume of water in a pool through the recirculation system.

60. “Vacuum Outlets” means the fitting in the pool which is used as an outlet for connecting the underwater suction cleaning equipment.

61. “Vacuum Piping” means the piping which connects the vacuum fitting to the pump suction.

62. “Vertical” is interpreted to permit poolside wall slopes not greater than one foot horizontal for each five feet of height of the poolside wall (79 degrees).

63. “Wading (Kiddie) Pool” means a pool intended to be used exclusively by children for wading.

64. “Water Course, Water Slides or Water Flumes” means any pool using a water flume, channel, or slide for purposes of sliding and landing in an area filled with water (this does not include commercially manufactured swimming pool sliding boards).

65. “Well-Point System” means perforated pipe(s) placed in a gravel pit under the deepest point of the pool, where a pump may be connected to remove excess ground water from beneath the pool.

66. “Zero Depth Entry Pool” means a pool with a starting water depth of zero (0) feet which uniformly slopes to a deeper water depth.

67. “Zone” means any pool use type as it relates to the intended use of a specific portion of a hybrid pool (kiddie play zones, slide landing zones, lazy river zones, and swim zones). Zone areas and volumes must be clearly delineated on the plans and specifications.

B. CONSTRUCTION AND OPERATING PERMITS

1. Applicability.

Requirements of this section are applicable to all new construction and alterations of existing public swimming pools.

2. Construction Permit.

No public swimming pool may be constructed or altered until a permit to construct has been issued by the Department.

3. Application for Permit to Construct.

The application must be made on a form supplied by the Department and be accompanied by the appropriate application/review fee. The application must include:

(a) The names, complete address and telephone number of the owner, pool contractor, and facility; contractor's license number and project cost as defined by South Carolina Department of Labor, Licensing, and Regulation, General and Mechanical Contracting Act, Chapter 11, Title 40. The owner must sign the application.

(b) Responsibilities of the owner and pool contractor to include: the swimming pool, deck and coping, equipment room, fence, area lights, bathhouse, minimum toilet facilities, chemical storage room, water lines, hose bibbs and water discharge lines, where applicable.

(c) Details of the pool to include type of pool, perimeter, area, volume, minimum flow rate, design flow rate, total deck area, pool limit and deck limit.

4. Plans and Specifications.

At least four (4) copies of complete plans and specifications meeting the following requirements must accompany all applications of permits to construct:

(a) Plans and specifications shall be prepared, stamped, dated and signed by an architect or engineer registered in the State of South Carolina. Once construction starts, the pool contractor must maintain a copy of the DHEC-approved plans and specifications on the job site until the final inspection.

(b) Plans shall be submitted on sheets no larger than thirty-six (36) inches by forty-two (42) inches and no smaller than eighteen (18) inches by twenty-four (24) inches.

(c) Typed or legible specifications shall be submitted on sheets eight and one half (8 ½) inches by eleven (11) inches or printed on the plans.

(d) Plans and specifications must include data that pertains to that project only (except site plans; which by their nature must include other structures and details).

Standard plans and/or specifications with crossed-out sections or inapplicable provisions will not be acceptable for review.

(e) Plans and specifications must include:

(i) A location map with the name of the facility, the location showing distance in miles and local landmarks and the names and addresses of the owners.

(ii) An outlined block for the perimeter, the surface area, the volume, the total deck area, the minimum flow rate, the design flow rate, the swimming limit and the deck limit specifically listed on the plans.

(f) A site plan must be provided consisting of a detailed layout of the facility and the surrounding structures. The site plan must show the distance to toilet facilities, telephone, the location of utilities that affect construction of the pool, elevation differences in the deck and surrounding structures, the location and elevations of planters within 10 feet of the pool edge, etc.

(g) Plan and profile views of the public swimming pool must be shown. These views must be drawn to a minimum of 1/8" scale with all major pool dimensions shown on the drawing. All equipment (fittings, ladders, diving boards, main drains, surface skimmers, overflow gutters, inlets, lights, piping location, fill spout, etc.) shall be clearly located on these views.

(h) A complete equipment list must be included. This list must include manufacturer's name and manufacturer's complete model number (not distributor's name and model number).

(i) Actual layout of deck area including dimensions, showing the location of hose bibbs, footshowers, overflows, depth markers, deck drains, and deck lighting must be provided. Deck material and color must be specified. The quantity of lighting in watts, lumens, or foot candles that will be provided for the deck and pool areas must be provided where night swimming is requested.

(j) Schematic plumbing diagrams showing pipe sizes on each section of pipe, valves, flow meter, heater, filters, pumps, etc. must be shown.

(k) Equipment room plan drawing showing actual layout of equipment (heater, pump, filter, chlorinator, and other equipment), spacing, elevation, all pipe sizes, location and size of sumps, floor drains and other appurtenances with dimensions given and drawn to a minimum ¼" scale shall be provided. The volume of the equipment and chemical storage rooms must be provided along with the minimum size of the exhaust fans to be installed.

(l) Source of pool water used must be specified.

(m) Disposition of sanitary sewage from the facility must be specified.

(n) Disposition of filter backwash must be specified. Approval from the Department will be required for all discharges.

(o) Complete details of any required bathhouse or minimum toilet facility shall be submitted.

5. Design/Equipment Changes.

(a) New Construction. Once a construction permit has been issued for a public swimming pool, construction must be in accordance with the approved plans and specifications. Should design changes or equipment changes become necessary during construction, a Swimming Pool Change Order Request Form, detailing the proposed changes must be submitted to and approved by the Department prior to initiation of such changes. Revised plans documenting all construction modifications will be required to be submitted prior to the final Department inspection. The submittal must include four (4) complete sets of revised plans that are signed, sealed, and dated by the project architect or engineer.

(b) Existing Facilities. After a pool has received approval to be placed into operation, a Change Order Request Form must be submitted in accordance with Section I for any alteration which does not conform to the original permitted plans, specifications, or previously approved change order.

(c) Fees. The appropriate fee if any must be submitted with the Change Order Request.

6. Piping Inspection.

During actual construction of the public swimming pool, after all piping has been installed and before it is covered, the contractor, design engineer, or architect, must notify the Department in writing so that an inspection of all piping, fittings, and other applicable equipment can be conducted to verify their sizes and locations. Pressure testing of the piping must be conducted in accordance with R.61-51.C.24(d). If there are any variations from the approved plans and specifications, such variations must be corrected by the contractor, or plans and specifications detailing the changes must be re-submitted for a construction permit revision prior to continuance of construction.

7. Final Approval.

No newly constructed or altered public swimming pool shall be placed into operation until a final inspection of the facility has been conducted and a written approval to be placed into operation is issued by the Department. Before the final inspection can be conducted three (3) letters must be submitted, one by the pool contractor; one by the general contractor, owner or his designated agent; and one by the project architect or engineer; certifying that the public swimming pool, bathhouse, minimum toilet facilities, if required, fence, equipment room, area lighting, if provided, and other applicable items have been constructed according to approved

plans and specifications and is ready for the final inspection. All three letters must be received by the Department before a final inspection will be conducted. In addition to the three certification letters, the engineer and or the architect or their representative must complete a copy of the Department's final inspection checklist, and it must be submitted to the Department prior to the final inspection. A contractor's and owner's representative must be present at the time of the final inspection.

8. Fees.

The Department shall collect non-refundable application/review fee(s) with each application according to the schedule outlined in R.61-30, *Environmental Protection Fees.*

9. Repeat Inspections.

The Department may collect an additional fee from the contractor for each repeat piping inspection for each pool and from the owner for each repeat final inspection for each pool that is required due to incomplete construction or construction that is not in accordance with permitted plans and specifications as outlined in R.61-30. There will be a mandatory two (2) day (business days) waiting period between all repeat piping, final, and change order inspections to provide for review and rescheduling.

10. Construction Contractor.

All new construction and alterations to existing public swimming pools must be performed by a contractor holding a South Carolina license with the appropriate sub-classification in accordance with the South Carolina Department of Labor, Licensing and Regulation's General and Mechanical Contracting Act, Chapter 11, Title 40 as amended.

11. Permit Terms.

A permit is valid for one (1) year from the date of issue unless an alternate date is established by the Department. This one (1) year period includes the time it takes to obtain a Final Approval. A permit extension may be granted for up to one year from the date of the request. Extension requests must be submitted on a Change Order Request form and will not be granted if the request is received more than one year from the expiration date of the permit. Up to three permit extensions can be granted. Unless an extension can be granted as provided above, a new application, with the appropriate fee and permit package must be submitted for expired permits.

C. GENERAL CONSTRUCTION REQUIREMENTS FOR ALL PUBLIC SWIMMING POOLS

1. Applicability.

Requirements of this section are applicable to all new construction and alterations of existing public swimming pools. All work must be performed in accordance with good engineering practice and recognized industry standards.

2. Water Supply.

All water used in public swimming pools, drinking fountains, bathhouse, or minimum toilet facilities, must be supplied from a Public Drinking Water System.

(a) Water for filling pools shall be supplied by a fillspout that is located at least 2 diameters of the fillspout above the rim of the swimming pool or an above the rim supply to the surge tank, whereby no arrangements exist which, under any condition, permits contaminated water to re-enter the potable water system. The fillspout must be located adjacent (no greater than six (6) inches away) to a ladder or under a handrail or diving board and extend to the edge of the coping and not more than one (1) inch past the edge of the coping. All fillspouts must be of chrome plated brass, stainless steel, or other equivalent material approved by the Department.

(b) Where a fillspout is not employed, an approved double check valve assembly in the line supplying water to the pool shall be used. The device must be installed in a location which is accessible for visual inspection and for testing and/or repair. The double check valve assembly must be tested by a certified tester after installation and before use by the customer as required by the South Carolina State Primary Drinking Water Regulations 61-58. Each device used must be from the approved list of backflow prevention devices issued by the Department. The municipality or water utility which supplies the facility and the Department shall be provided a copy of the test results. Kiddie pools may be filled via a hose bibb if it is protected by an ASSE 1024 listed residential dual check or other Department approved backflow prevention device.

3. Sanitary Sewage.

The disposition of sanitary sewage from the bathhouse or minimum toilet facilities must be into a sanitary sewer, a septic tank or other waste treatment facility which has been approved by the Department.

4. Location.

The location of the pool will in no way hinder the operation for which it is designed nor adversely affect bather's safety or water quality. Outdoor pools must not be located where they will be exposed to excessive pollution by dust, smoke, soot, or other undesirable substances. If any portion of the pool is located within ten (10) feet horizontally of any second story balcony or any other elevated structure of which the floor elevation is between two (2) and thirty (30) feet above the pool deck, a protective barrier must be provided on said balcony or elevated structure. This barrier must be a minimum of five (5) feet in height and have no openings within this barrier greater than 4 inches in width. Buildings or structures at the pool deck level only within

ten (10) feet of the pool waterline that have glazing must utilize tempered safety glass or other shatter resistant safety glazing for any doors and windows. All indoor pools must be located in adequately ventilated areas.

5. Material and Finish.

(a) Public swimming pool shells must be constructed of reinforced concrete or other structurally sound material equivalent in strength and durability, designed and built to withstand anticipated stresses, and designed and built of watertight construction with smooth and impervious surfaces. If a pool structure is to be lined with a dissimilar material, the two materials must be continually and permanently bonded so as not to separate at any time or place. American Concrete Institute standards must be used in design and construction of reinforced concrete including gunite, shotcrete and other types of acceptable concrete. No vinyl lined pools or spas are allowed.

(b) A moderately smooth, non-slip white or light colored water proof finish, which will withstand repeated brushing, scrubbing and cleaning procedures, must line the pool. Paint, fiberglass, or epoxy coated finishes shall be non-toxic, water-resistant, of one single very light color, and must continually and permanently bond so as not to separate at any time. Colors must have reflectance of fifty-five percent or greater except for logos. All corners and edges shall be rounded and smooth to prevent cuts or abrasions to swimmers. All corners and all junctions of walls and floor must be rounded with a minimum six (6) inch radius. Any variation of this required six (6) inch radius must be approved on an individual basis.

(c) A minimum six (6) inch glazed frost proof tile or other easily cleanable surface must be placed at the normal water line.

(d) Logos or extraneous writing or materials shall be approved on an individual basis. Color, size and pattern of logos shall not be such as to obscure the existence or presence of objects or persons within the pool.

6. Pool Decks.

(a) The deck must be continuous around the public swimming pool and unobstructed, with minimum widths as follows:

(i) Type “A” six (6) feet

(ii) Type “B” four (4) feet; Type “B” pools over 1600 square feet, six (6) feet.

(iii) Type “C” four (4) feet

(iv) Type “D” (less than 700 square feet) at least two (2) feet around one hundred percent or four (4) feet around at least fifty percent of the facility. Type

"D" (700 square feet to 1600 square feet) at least four (4) feet. Type "D" (greater than 1600 square feet) at least six (6) feet.

(v) Type "E" flumes, slides and lazy rivers ten (10) feet around the exit of the landing pool, four (4) feet around the starting pool. All other Type "E" pools are required to have a minimum of six (6) feet.

(vi) Type "F". Deck widths for Type "F" pools will be determined depending on the use of each pool.

(b) Pool decks required in (a) above must be constructed of broom finish concrete or other material which is as equal in strength and durability. The deck must be non-slip, impervious and no hazard to bare feet. The deck must slope The deck must slope one-quarter (1/4) inch to five-eighths (5/8) inches per foot per foot away from the pool. No wood decking or carpet is allowed within the required minimum deck widths. If concrete pavers are used for pool decking, they must be installed per the Interlocking Concrete Paver Institute (ICPI) code.

(c) A minimum of three (3) feet of deck width must be provided on the sides and rear of any piece of diving or sliding equipment, lifeguard chairs, ladders and handrails. Poolside tables and chairs or other equipment must not obstruct the deck areas within the minimum widths listed for each type pool.

(d) All corners and edges of deck or coping must be smooth and round so as to not cause cuts or abrasions to swimmers. The top of the pool wall must be uniformly level and designed with bull-nosed coping or some other acceptable means by which an adequate handhold is provided around the entire pool perimeter.

(e) All deck drainage must be "to waste" and not be filtered and returned to the pool. Deck drains must be installed where necessary to prevent standing water on the deck. The deck drain grates shall be removable or provide for other means so as to facilitate the cleaning of the drains.

(f) Hose bibbs must be provided around the perimeter of the deck area at intervals such that all parts of the deck can be reached with a one hundred (100) foot hose. A hose bibb may be located in the equipment room. All hose bibbs in the pool area must be isolated from the public water supply by an ASSE 1024 listed residential dual check or other Department approved backflow prevention device. If a common ASSE 1024 listed residential dual check valve is installed, it must be located in either the equipment room, or in a valve box such that it can be maintained and or replaced as necessary. Also, a shutoff valve must be installed downstream of the backflow device so the Department can verify that all hose bibs are protected by the common backflow device. All backflow devices must be installed so that they are visible at the time of the final inspection.

(g) All outdoor pools shall be provided with a foot rinse shower at major entrance points, up to a maximum of three (3). The foot rinse shower must be located within twenty (20) feet of the corresponding entrance point.

(h) Up to ten percent (10%) of the pool perimeter may be obstructed. Obstructions shall have the required minimum deck width behind or through them within fifteen (15) feet of the water. These obstructions must be protected by a barrier or must be designed to discourage patron access. When an obstruction exists in multiple areas around the pool the minimum distance between obstructions shall be four (4) feet.

7. Depth Markers.

Permanent depth markers must be plainly marked at or above the water surface on the vertical pool wall and on the edge of the coping or deck next to the pool, at a maximum and minimum point and at not more than two (2) foot intermediate increments of depth. Depth markers must also meet the following requirements:

(a) Depth markers must be spaced at not more than twenty five (25) foot intervals on center, as measured around the perimeter of the pool.

(b) A minimum of three (3) sets of evenly spaced depth markers are required for Type “C” and “D” pools.

(c) One set of markers must be located adjacent to the steps or handrail.

(d) Depth markers must be in numerals and letters of four (4) inch minimum height and of a light-colored background (that is, having a reflectance of fifty-five (55) percent or greater) with dark, contrasting lettering. Alternative designs, having sufficient contrast, will be considered on case-by-case basis.

(e) Depth markers must be accurate to within three (3) inches at normal operating level

(f) The abbreviation “ft.” or word “feet” must be included.

(g) A total of twelve (12) inches of white background tile must be included as part of each depth marker(s).

(h) Depth markers are required for all pools, kiddie pools, spas, hot tubs, special water park pools, etc. Kiddie spray decks do not require depth markers.

(i) Depth markers on the deck must be non-slip and must start within fifteen (15) inches of the pool edge.

(j) In pools requiring “No Diving” signs, a single six inch by six inch universal no diving tile must be co-located with each set of deck depth marker tiles.

(k) Metric depth markers may be installed at any facility in addition to the standard markers required above.

(l) Depth markers for pools with multiple slopes (bowl shaped and diving wells) must accurately reflect the minimum depth at the edge of the pool and the maximum depth at the center of the pool and separated by a hyphen. For example, a pool sloping from all sides to the center would require the installation of the following depth markers, "3 FT - 5 FT".

(m) Alternative types of depth markers will be considered on a case by case basis for pools using stainless steel gutters or fiberglass shells.

(n) Depth markers shall be verified by measuring the depth at a distance of two (2) feet from the edge of the pool.

8. Fences.

(a) All outdoor Type "A" and "E" public swimming pools (including the deck area) must be enclosed by a chain link fence or equal barrier of minimum six (6) foot height to prevent trespassing and to provide safety and cleanliness of the water. Type B and Type E pools that have a slide that is only in use when lifeguards are present must have the entry and exit points of the slide secured by either a six (6) foot high fence, or another method approved by the Department. All openings in the barrier must be equipped with gates or doors, with latches, that close automatically and can be locked. No openings in the fence shall be large enough for a four (4) inch sphere to pass. Local building codes for the pool location may require a smaller fence opening.

(b) All outdoor Type "B", "C", "D" and "F" public swimming pools (including the deck area) shall be enclosed by a minimum four foot fence as measured from the exterior of the pool area. All openings in the barrier must be equipped with gates or doors, with latches, that close and latch automatically and can be locked. Courtyard fencing may not be adequate to constitute fencing of the pool area. No openings in the fence shall be large enough for a four (4) inch sphere to pass. Local building codes for the pool location may require a smaller fence opening.

9. Equipment Room.

(a) A suitable equipment room shall be provided to house all pool equipment to prevent unauthorized access. The room shall be of substantial and enduring construction to protect the equipment from damp, corrosive environment. This room shall have a roof, be at least eight (8) feet high and have a standard size lockable entrance door. Where equipment rooms are constructed at a different elevation than the surroundings, permanent steps should be provided for entry. The equipment room must be sized so that all equipment is accessible for ease of operation and inspection. The equipment room door must be sized to allow for the largest filter in the room to pass through. At least three feet of clear walkway must be provided to allow access to the equipment. The

room must have at least one (1) watt of artificial light for each square foot of floor area with a minimum of 100 watts incandescent, or equivalent. Continuously operated forced ventilation must be provided during pool operation so that the equipment room has a minimum of ten (10) complete air changes per hour and is vented to the outside and away from the pool. The light switch must be separate from the fan switch if a fan switch is provided. The floor shall be concrete and shall include necessary sumps. The floors must be sloped to drain to either floor drains or to the sump. All sump pits must be provided with a protective grate or covering capable of supporting a person. Sump pits that are protected by walls extending three (3) feet or more above the floor elevation do not have to have a protective grate. The purpose of this room is for recirculation system equipment only and storage of any other material or equipment is prohibited. Equipment rooms constructed below grade must be provided with reasonable access so as not to be considered a confined space. An emergency disconnect (e.g. shunt trip breaker) switch that disconnects all pumps in the equipment room must be located on the pool deck and clearly labeled with a minimum of four (4) inch red letters on a white background that states "Pool Emergency Cut-Off Switch".

(b) A suitable alternative to the above room will be considered on a case by case basis as long as the pool equipment is protected from a damp and corrosive environment, vandalism, and has adequate access for maintenance.

(c) All equipment must be installed per the manufacturer's recommendations, including equipment clearances.

10. Chemical Storage.

All pool chemicals must be housed in a separate room from the equipment room. The chemical storage room must have at least one (1) watt of artificial light for each square foot of floor area with a minimum of 100 watts incandescent or equivalent light. Continuously operated forced ventilation must be provided so that the chemical storage room has a minimum of ten (10) complete air changes per hour and is vented to the outside. The light switch must be separate from the fan switch if a fan switch is provided. The pool chemical room must be kept dry and locked at all times. Only chemicals used in the operation of the pool shall be stored in this room. Chemical storage rooms constructed below grade must be provided with reasonable access so as not to be considered a confined space.

11. Drinking Fountain.

At least one (1) drinking fountain shall be provided within fifty (50) feet of the pool at all public pools. All electrical drinking water fountain wiring must be in accordance with the National Electrical Code (NEC).

12. Emergency Notification Device.

A toll free emergency notification device to notify emergency personnel must be provided within a two hundred (200) foot walking distance of the pool and in a location that it is easily accessible during the hours that the pool is in operation. Only permanently-mounted notification devices are acceptable to the Department. Mobile, voice over internet, or cordless telephones are not an acceptable alternative to permanently-mounted emergency notification

devices. The physical address of the pool must be displayed at the emergency notification phone or device in a manner that is permanent and weather resistant.

13. Bathhouse Facilities.

Dressing and sanitary plumbing facilities must be provided for all Type "A" and "E" public swimming pools that charge for admission. Bathhouse facilities shall be located within two hundred (200) feet of the swimming pool. Applicable Americans with Disabilities Act guidelines shall be observed. Every bathhouse must be provided with separate facilities for each sex with no inter-connection between the male and female facilities. The rooms must be so developed and planned that good sanitation can be maintained throughout the building at all times.

(a) Minimum Fixtures. Minimum sanitary plumbing fixtures for Type "A" and "E" pools must be provided as follows:

(i) Males. One (1) water closet, one (1) lavatory, and one (1) urinal for the first one-hundred (100) male swimmers, or major fraction thereof. One (1) additional water closet, lavatory and urinal must be provided for each additional two hundred (200) male swimmers or major fraction thereof. A minimum of two (2) showers for the first one hundred (100) male swimmers and one (1) shower for each additional fifty (50) male swimmers or major fraction thereof.

(ii) Females. A minimum of two (2) water closets and one (1) lavatory for the first one hundred (100) female swimmers, or major fraction thereof. Two (2) additional water closets and one (1) lavatory must be provided for each additional two hundred (200) female swimmers or major fraction thereof. A minimum of two (2) showers for the first one-hundred (100) female swimmers and one (1) shower for each additional fifty (50) female swimmers or major fraction thereof.

(b) Hose Bibbs. Hose bibbs located at least ten (10) inches above the floor must be provided for washing down the dressing rooms and bathhouse interior. Each hose bibb must be provided with an ASSE 1024 listed residential dual check or other Department approved backflow prevention device.

(c) Floors. The floors of the bathhouse must be of impervious material, relatively smooth but not a slick finish, to ensure complete cleaning. Floor drains must be installed and must be a minimum of four (4) inches in diameter to ensure positive drainage of all parts of the building, with a slope in the floor of not less than one-fourth (1/4) inch per foot, toward the drains. Carpet shall not be used on bathhouse floors.

(d) Materials and Finish. Materials and finishes used in bathhouses and/or restrooms are subject to approval by the Department. All screen, shower, toilet and dressing room booth partitions must be made of durable materials not subject to damage by water and must be so designed that each area can be adequately drained.

(e) Steps. No steps will be allowed in the interior of any dressing rooms.

(f) Light and Ventilation. Showers and dressing room areas must be furnished with one (1) watt of incandescent light for each square foot of floor area and have adequate ventilation.

(g) Soap Dispensers. Soap dispensers for providing either liquid or powdered soap must be provided at each lavatory or between each pair of lavatories. Soap dispensers providing either liquid or powdered soap must be provided at each shower head or between each pair of shower heads.

(h) Mirrors. Mirrors, if provided, must be shatter-resistant.

(i) Toilet Paper Holders. Toilet paper holders must be provided at each water closet.

(j) Tempered Water. Tempered water only must be provided at all shower heads. Water heater and thermostatic mixing valves must be inaccessible to bathers and must be capable of providing two (2) gallons per minute of water to each shower head. The temperature of the water must not exceed 90 degrees Fahrenheit and must have an automatic cut-off thermostat set at 90 degrees Fahrenheit.

(k) Towels. Single service paper towel dispensers or blower type hand dryers must be provided.

14. Minimum Toilet Facilities.

(a) Minimum toilet facilities shall be provided within a three hundred (300) foot walking distance of Type “B”, “C”, “D”, “F” pools and Type “A” and “E” facilities that do not charge for admission. Minimum toilet facilities must consist of at least one (1) lavatory and one (1) water closet for each sex. Floors must be of impervious materials and relatively smooth, but not have a slick finish. Each room must be furnished with a minimum of 60 watts of incandescent light and have adequate ventilation. Soap dispensers for providing either liquid or powdered soap must be provided at each lavatory or between each pair of lavatories. Mirrors, if provided, must be made of shatter-resistant material. Single service paper towel dispensers or blower type hand dryers must be provided. Toilet paper holders must be provided at each water closet. Floors must be well drained to prevent standing water. Carpet shall not be used on the floors.

(b) Minimum toilet facilities are not required if all living units are within a three hundred (300) foot walking distance of the nearest water’s edge and are each equipped with private facilities.

15. Filtration System.

(a) Diatomite Filters. Filters must be approved by and bear the seal of the National Sanitation Foundation. Filters may be of either pressure or vacuum type. The filter rate must not exceed two (2) gallons per minute per square foot of filter surface

area. Provisions must be made for backwashing the filter at not less than two (2) gallons per minute per square foot of filter surface area. The filter(s) must be provided with pressure or vacuum gauges for determining the need for backwashing and sight glass to determine when backwash is clear.

(b) High Rate Sand Filters. Filters must be approved by and bear the seal of the National Sanitation Foundation (NSF). The filter rate may not exceed fifteen (15) gallons per minute per square foot of filter surface area. A higher rate may be allowed if approved by the NSF. Provisions must be made for backwashing the filter(s) at the manufacturer's recommended backwash rate. The filter(s) must be provided with pressure gauges for determining the need for backwashing, backwash sight glass, and air-relief device.

(c) Cartridge Filters. Filters must be approved by and bear the seal of the National Sanitation Foundation. The filters must be of a disposable or washable element. Surface types must have a maximum flow rate of 0.375 gallons per minute for each square foot of effective filter area. A spare cartridge filter must be provided at each site where these types of filters are used. A sump pit and or hard piped drain line must be installed to handle the design flow rate of the recirculation system. If connected to a sanitary sewer system or municipal separate storm sewer system, specific approval must be obtained from the municipality or sewer authority for such discharge.

(d) Other Filters. The National Sanitation Foundation and/or the Department must approve any filters other than those described above before they can be considered for use in the recirculation system for public swimming pools.

16. Filter Backwash.

Backwash from the filter(s) must be piped to a disposal pit, tile field, or other disposal method approved by the Department. If the backwash water is to be discharged to a sanitary sewer system or municipal separate storm sewer system, specific approval must be obtained from the municipality or sewer authority for such discharge. If the method of backwash will be to an on-site storm sewer system, the location of the discharge and the name and distance of any receiving body of water must be identified on the project plans. Any discharge of backwash water to a water body must receive prior approval from the Department. All pools that directly discharge backwash water to waters of the State or stocked ponds must be equipped with an appropriately sized dechlorination device. If the method of backwash disposal will be to a pit or tile field, the location of discharge must be identified on the project plans and the receptacle must be adequately sized to accept the pool drainage. Also, a three (3) minute backwash cycle must be conducted at the time of the final inspection to ensure that there is adequate capacity of the disposal system. A minimum six (6) inch air gap must be maintained at the discharge point or two (2) single in-line check valves must be installed in the backwash line. The receptacle must be sufficiently sized to accommodate the backwash flow.

17. Pool Drainage.

The method and location of discharge employed to drain the pool must be included on the project plans and the receptacle must be adequately sized to accept the pool drainage. If the pool

drains to a sanitary sewer system or municipal separate storm sewer system, specific approval must be obtained from the municipality or sewer authority for such discharge.

18. Rate of Flow Indicator.

Every public swimming pool must be provided with a rate of flow indicator located on the discharge line from the filters. Rate of flow indicators must be accurate to + or - 5% and installed according to manufacturer's instructions. Dimensions must be shown on the schematic diagram, indicating the actual location of the rate of flow indicator. The rate of flow indicator must be calibrated for and provided with a scale reading in gallons per minute and shall have an upper range at least ten (10) percent above the maximum design flow rate. The scale resolution of the meter must fall within the design flow of the system. The activating element of the flow indicators must be installed in the filter effluent line. The flow meter must be mounted in a location such that it can be easily read.

19. Heater.

Heaters, where used, shall be installed and operated in accordance with manufacturer's recommendations and local building codes to include proper ventilation. The heater design must be such that it will not affect the minimum required design flowrate. A thermostat control must be provided with an automatic cut-off for an upper limit of 104 degrees Fahrenheit and above. Solar panels may be used as a pool heater provided that the materials used in the solar panels must be non-toxic and acceptable for use with potable water. Data verifying the material is non-toxic must be submitted to the department for review and approval at the time the application is made. Pools equipped with solar panel heaters shall have a fixed thermometer mounted in the pool recirculation line downstream from the heater outlet. All equipment and appurtenance used to operate a solar panel heater must meet the applicable portions of R.61-51.

20. Pump and Motor.

Pumps and motors under five (5) horsepower must be National Sanitation Foundation (NSF) approved or must be equally listed by a Testing Lab approved by the Department. The pump and motor must be of adequate size and capacity to provide the required pool turnover rate and should be located so as to eliminate the need for priming. If pump or suction piping is located above the overflow level of the pool, the pump must be self-priming. The pump and motor must be designed to supply, without overloading, the required design rate at a total dynamic head sufficient to overcome the friction losses in the piping, appurtenances, and the maximum headloss through the filter(s). Unless headloss calculations are provided by the designing engineer, pump design must be based on an assumed total dynamic head of fifty five (55) feet of water. All pumps must be provided with a corrosion-resistant strainer to remove solids, debris, hair, lint, etc. Pool pump motors must have a directly accessible on/off switch within three (3) feet horizontal distance of the pump(s). Pump(s) shall not be activated by a panel circuit breaker. All pumps shall be installed in accordance with the National Electrical Code (NEC). A device for regulating the rate of flow may be provided in the recirculation pump discharge piping.

21. Water Treatment.

Equipment for halogen disinfection (chlorine, bromine) must be provided on all pools. This equipment must be approved by and bear the seal of the National Sanitation Foundation.

The equipment must be of such capacity to feed one (1) pound of free available chlorine per ten-thousand (10,000) gallons of pool volume per twenty-four (24) hour period in all pools. The equipment must be operable at all times that the recirculation system is in operation. This equipment must be installed in accordance with the approved manufacturer's instructions. The equipment manufacturer's name and model number of chemical feeder, as well as the size and number of feeding tanks must be furnished. All chemical feed pumps must be wired directly to the recirculation pump such that when recirculation flow stops chemical feed is halted. GAS CHLORINATION IS NOT PERMITTED. No chemical may be manually fed while the pool is open for operation. Supplemental water treatment systems may be approved on a case by case basis. Chemical feed containers for use with liquid feed systems, in excess of fifteen (15) gallons, must be provided with spill containment and must be clearly labeled. A detailed drawing must be included on the project plans. Ultraviolet (UV) or ozone disinfection may be added to any pool in addition to the minimum required disinfection.

22. Separate System.

Each individual pool constructed must have its own pump, motor, filter, disinfection equipment, piping, etc., such that it is a complete unit and not dependent upon any other recirculation system, except as provided otherwise in these regulations. Separate recirculation systems are required for indoor-outdoor pools with a separate and independent system for both the indoor and outdoor bodies of water.

23. Automatic Controller.

If an automatic controller is to be used, the device must be installed in accordance with the approved manufacturer's instructions. The chemical feed pump(s) must also be directly wired to the recirculation pump and a flow switch such that when the recirculation flow stops, the chemical feed pumps are switched off. Other alternatives that provide redundancy will be considered by the Department on a case-by-case basis.

24. Piping.

(a) The determination of sizes of pipe, fittings, and valves on the complete main pump suction line from the swimming pool must be based upon a rate of friction loss for piping of not more than six (6) feet per one-hundred (100) feet based upon the Hazen-Williams formula using the following "C" values:

Iron Pipe: c = 100
Copper Pipe: c = 120
PVC Pipe: c = 150

(b) All piping on the discharge side of the pump for filtration and to the point for discharge of backwash water from the filter plant must have pipe sizes determined on a basis for friction losses which must not be more than twelve (12) feet per one-hundred (100) feet using "C" values given above.

(c) If PVC pipe is used it must be schedule 40 or greater, the chart below lists the maximum flow allowable in gallons per minute (gpm) for the indicated pipe sizes at 6'/100' suction loss and 12'/100' pressure loss for schedule 40 PVC plumbing.

Pipe size (inches)	**Suction at 6-ft/100-ft (flow in gpm)**	**Pressure at 12-ft/100-ft (flow in gpm)**
1 ½	27	39
2	57	83
2 ½	105	150
3	165	245
4	355	510
5	640	925
6	1000	1500

(d) All piping must be hydrostatically tested under pressure prior to being covered by earth, deck or pool structure. Minimum pressure for testing shall be thirty (30) psi or one and one half (1 ½) times the normal operating pressure on the return line, whichever is greater. Pressure must be maintained constant for two (2) hours. PVC pipe must be approved by the American National Standards Institute/National Sanitation Foundation or other laboratory acceptable to the Department with the ANSI/NSF or equal designated seal on each section of pipe. Only SD 26 Class 160 and SD 21 Class 200 PVC pipe meeting ASTM Standard D1785 or D2241 are acceptable in sizes twelve (12) inches and smaller. No heat bending of PVC pipe is allowed. All pool piping, angles, and elbows must be braced and supported to preclude possible settlement or rupture of the line. Gravity waste lines around the pool six (6) inches or smaller must have a minimum slope of one-fourth (1/4) inch per foot toward the effluent point. Lines larger than six (6) inches and all out-fall waste lines must be designed with a size of pipe and slope to maintain a minimum velocity of two (2) feet per second with no overload or back pressure in the lines. All piping and equipment must be provided as much as possible with positive means of completely draining all water to prevent damage from freezing. All piping in the equipment room must be permanently marked with directional arrows and identified as to origin and use, e.g., surface skimmer, main drains, etc. No flexible piping may be installed as part of the pool recirculation or booster systems. NSF PVC flexible piping may only be used for spa air lines and must be glued at all joints.

25. Pool Inlets and Outlets.

(a) All inlets and outlets must be provided and arranged to produce complete recirculation of water and the maintenance of uniform disinfectant throughout the pool. Relative placement of inlets and skimmers shall not produce short circuiting of the recirculation water. There must be at least four (4) return inlets, except for facilities covered under Section E and F. Wall return inlets must have variable orifice, directional flow fittings so that the flow pattern can be adjusted. Floor return inlets may be installed if they are uniformly spaced, if the number of floor return inlets provided meets the requirements of R.61-51.C.25(b). The maximum flow per inlet for all recirculation and

booster system return inlets is twenty-five (25) gpm or a velocity of no greater than forty (40) feet per second per inlet. A minimum of ten (10) gpm must be provided per inlet. If necessary, the recirculation system shall be upgraded to meet the ten (10) gallon per minute requirement to ensure proper distribution of disinfectant.

(b) In pools with surface area greater than fifteen hundred (1,500) square feet, or length in excess of sixty (60) feet, inlets must be placed around the entire perimeter at maximum fifteen (15) foot intervals. In any case, an adequate number of inlets must be provided, properly spaced and located so as to accomplish complete recirculation and maintenance of a uniform and adequate level of disinfecting medium at all times. Approved inlets may be installed uniformly in the pool floor if the requirement of one (1) inlet per fifteen (15) feet of pool perimeter is met. All pool inlets must be corrosion resistant types and wall inlets must have means to adjust the flow pattern.

26. Overflow/Skimming Devices.

All public swimming pools must have one (1) of the following types of surface skimming devices. Skimming action must be provided at all times when the recirculation system is in operation. Total capacity of all overflow/skimming devices in any pool must be at least one hundred percent (100%) of the required filter flow of the recirculation system.

(a) Perimeter Overflow Gutters. These gutters may be of the recessed or roll-out type. If recessed gutters are used, they must be located near the top of the pool wall and must have a minimum depth of three (3) inches. They must be uniformly level and be designed to serve as a handhold. The gutter drain outlets shall be constructed of non-corrosive material and must be placed on a maximum of fifteen (15) foot centers; gutter branch lines must be a minimum of two (2) inches in diameter. The gutter bottom must slope toward these outlets with a minimum slope of one-eight (1/8) inch per foot. The gutter must be easily accessible for cleaning. The opening into the gutter must not be less than four (4) inches wide.

(i) When perimeter overflow gutters are used, a surge capacity must be provided to accommodate excess water that cannot be satisfactorily accommodated by the recirculation system. Surge capacity must be not less than one gallon for each square foot of pool surface. Recovery time required to return the overflow system to skimming action after maximum pool displacement has ceased must be minimized. Credit may be given for in pool surge capacity provided that the gutter is designed to serve in this manner and skimming action is provided over the complete range of water levels.

(ii) Roll-out gutters must have a width of eight (8) to twelve (12) inches and must have an edge that is uniformly level. The lip of the gutter must have a minimum pitch of one (1) inch to twelve (12) inches of width. Gutter drains of non-corrosive material must be located on maximum eight (8) foot centers; gutter branch lines must be a minimum of one and one-half (1 ½) inches in diameter. The gutter must slope toward these outlets with a minimum slope of one-eighth (1/8) inch per foot.

(iii) Requests for gutters differing from those described above will be reviewed for approval on an individual basis after supporting engineering data, including complete hydraulics of the proposed gutter system and connecting piping has been submitted. Gutter systems must be designed so that skimming action will occur over the complete range of water levels from quiescence to full bather load.

(b) Recirculating Surface Skimmers. At least one (1) NSF listed skimmer must be provided for each four hundred (400) square feet of pool surface area, or major fraction thereof.

(i) Skimmers must be located so that the middle of the skimmer is positioned three (3) to seven (7) inches below the pool coping such that the normal operating water level of the pool is the middle of the skimmer. In lazy rivers, this depth may be increased to nine and one half (9.5) inches. The skimmer throat shall be made of tile and recessed a minimum of six (6) inches from the inside pool wall with a minimum of eighteen (18) inches opening in the pool wall angling into the skimmer throat opening (see diagram).

(ii) Skimmer weirs must be automatically adjustable to variations in water level over a range of at least three (3) inches.

(iii) An easily removable and cleanable basket, or screen, through which all overflow water must pass must be provided in each skimmer to trap large solids. One extra skimmer basket shall be provided for each pool.

(iv) The skimmer must be provided with an equalizer pipe to prevent airlock in the suction lines. This pipe must provide an adequate amount of make-up water for pump suction should the water of the pool drop below weir level. It must be at least one and one half (1 ½) inches in diameter and be located at least one (1) foot below the lowest overflow level of the skimmer. It must be provided with a valve or equivalent device that will remain tightly closed during normal operating conditions, but will automatically open when the water level drops as much as two (2) inches below the lowest weir level.

(v) The overflow weir must operate at all flow variations expected, and must be of such buoyancy and design so as to develop an effective velocity over the weir lip.

(vi) The skimmer must be of substantial, enduring and corrosion-resistant material. Each skimmer must have a device to control flow.

(vii) Where concrete pavers are used for decking, the skimmers must be anchored in place with concrete to prevent them from settling.

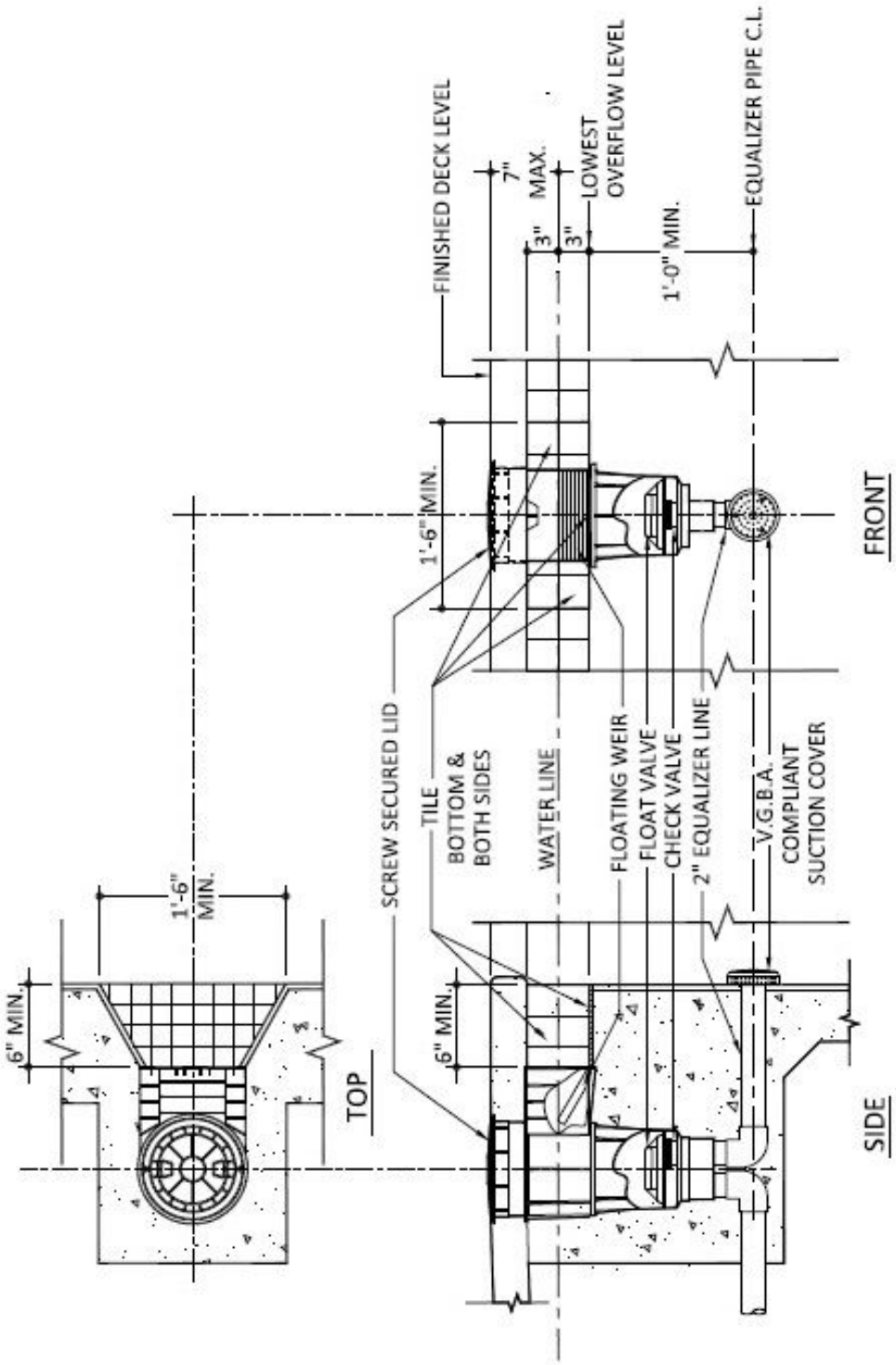
FINISHED DECK LEVEL
7" MAX.
3"
3"
LOWEST OVERFLOW LEVEL
1'-0" MIN.
EQUALIZER PIPE C.L.
1'-6" MIN.
FRONT
SCREW SECURED LID
TILE BOTTOM & BOTH SIDES
WATER LINE
FLOATING WEIR
FLOAT VALVE
CHECK VALVE
2" EQUALIZER LINE
V.G.B.A. COMPLIANT SUCTION COVER
1'-6" MIN.
6" MIN.
6" MIN.
TOP
SIDE

27. Safety Equipment.

(a) Lifeguard Chairs. There must be a minimum of one (1) lifeguard chair provided for each two-thousand (2,000) square feet of pool surface or major fraction thereof for Type "A" and "E" pools. Where two (2) or more lifeguard chairs are required they shall be strategically located to provide adequate coverage for all bathers. Lifeguard chairs must be elevated to such a height that will allow complete survey of the pool swimming area.

(b) Life Saving Equipment. All pools must be equipped with at least one (1) unit of life saving equipment must be inside the fence and be within two hundred (200) feet walking distance from any point on the pool perimeter. This equipment must be located within the pool area and inside the fence. One (1) unit of life saving equipment must be provided for each lifeguard chair. Life saving equipment is not required at Type "C" and "D" pools. All life saving equipment must be visible from the deck and unimpeded access must be provided.

(c) Emergency Equipment. All Type "A" and "E" pools must be equipped with at least one (1) unit of emergency equipment.

(d) First Aid Kit. All Type "A" and "E" pools must have a first aid kit. This kit must be readily accessible when the pool is open to the public.

28. Signs.

(a) All signs must be clearly displayed around the pool and must be free of obstructions including vegetation.

(b) Pool Rules Sign. At least one (1) "Pool Rules" sign for informational purposes must be posted such that the sign is visible from all entrance points of the pool and must contain, as a minimum, the items listed below, with the blanks reflected in (xii) through (xvi) below filled in before authorized operation:

(i) There should be no solo swimming.

(ii) There should be no running, boisterous or rough play.

(iii) No person under the influence of alcohol or drugs should use the pool.

(iv) There should be no spitting or blowing nose in pool.

(v) Persons with diarrheal illness or nausea should not enter the pool.

(vi) Persons with skin, eye, ear or respiratory infections should not enter the pool.

(vii) Persons with open lesions or wounds should not enter the pool.

(viii) No animals or pets allowed in the pool.

(ix) No glass allowed in the pool or on the deck.

(x) No children should be in the pool without supervision.

(xi) You should take a shower before entering the pool.

(xii) This pool is open from a.m. to p.m.

(xiii) The maximum number of swimmers allowed in the pool is .

(xiv) A first aid kit is located .

(xv) An emergency phone (or other notification device) is located .

(xvi) Life saving equipment is located at .

(c) No Diving Sign. In addition to the above sign, permanent and separate "NO DIVING ALLOWED" signs must be displayed in conspicuous locations at all pools of surface area greater than two hundred (200) square feet and not having dimensions adequate for diving. The sign must read in all capitalized letters "SHALLOW WATER - NO DIVING ALLOWED" and must have minimum four (4) inch lettering for "SHALLOW WATER" and six (6) inch lettering for "NO DIVING ALLOWED". Two (2) or more signs must be provided so as to be clearly visible to anyone entering the pool. This sign may be required on Type "C", "D", "E", "F", and "G" pools if the Department decides the signs are applicable.

(d) No Lifeguard on Duty Sign. In addition to the above signs, permanent and separate "NO LIFEGUARD ON DUTY" signs must be displayed in conspicuous locations. The sign must read in all capitalized letters "NO LIFEGUARD ON DUTY - SWIM AT YOUR OWN RISK" and must have minimum six (6) inch lettering for "NO LIFEGUARD ON DUTY" and must have minimum four (4) inch lettering for "SWIM AT YOUR OWN RISK". Two (2) or more signs must be provided and be clearly visible to anyone entering the pool. These signs are required on all Type "B", "C", "D", "F", and "G" pools that do not have lifeguards.

(e) Spa Caution Sign. In addition to a pool rules sign, heated spas must also have a waterproof sign with bold lettering which is clearly visible and contains the following warning statement:

CAUTION

(i) Elderly persons and those suffering from heart disease, diabetes, high or low blood pressure should consult their physician before using the spa.

(ii) The use of this spa while under the influence of alcohol, anticoagulants, antihistamines, vasoconstrictors, vasodilators, stimulants, hypnotics, narcotics or tranquilizers should be avoided.

(iii) Pregnant women should not use the spa without consulting their physician.

(iv) Persons should spend no more than fifteen (15) minutes in the spa at any one (1) session. Long exposures may result in nausea, dizziness or fainting.

(v) The maximum temperature recommended by the South Carolina Department of Health and Environmental Control, for any spa is 104ºF. The actual temperature of this spa at ___ o'clock today is ___ºF.

(f) Pool Operator Sign. A sign must be posted or language must be added to the "Pool Rules" sign which reads, "The Pool Operator at this facility is _____ State license number _____."

29. Main Drains.

(a) A minimum of two (2) main drains must be provided on the bottom floor of the pool with at least one (1) at the lowest point of the floor to completely drain the entire pool. All such outlets must be interconnected and each drain must be directly connected to the main drain line. The interconnecting line must be adequately sized to accommodate one hundred (100) percent of the recirculation or booster pump flow. The main drain spacing must not be greater than twenty (20) feet nor less than three (3) feet on centers, nor shall they be more than fifteen (15) feet from any side wall. Interconnecting and outlet pipes must be flush with side wall and/or floor of main drain sump. If the pool is intended for fire protection the main drains and piping associated must be sized appropriately and shown on the plans.

(b) Each outlet grate area must be sized to accommodate 100% of the recirculation flow and the velocity through the open area of the grate must not be greater than one and one-half (1 ½) feet per second. Each drain sump or pot must be of adequate depth and design to provide for uniform suction across the entire grate area. Outlet grates must be anchored with corrosion resistant screws that cannot be removed without the use of tools and slots must not be more than one-half (1/2) inch wide. When the outlet fittings are of the anti-vortex type, maximum entrance velocities may be increased to six (6) feet per second. All outlet grates must be of corrosion resistant materials.

(c) Hydrostatic relief valves must be incorporated into at least one of the lowest main drain sumps or a well point system must be provided. These may not be required when the bottom of the pool is above the high water table.

30. Overflow.

Overflows are required for all indoor pools having a volume of fifteen hundred (1,500) gallons or greater. If overflow connections are not provided in skimmers or surge tanks, some type of overflow must be built into the pool wall which will be of sufficient size to carry off water that could be supplied by the fill spout, rainfall, or automatic fill device. All such overflow devices must drain to an approved location and must have a minimum six (6) inch air gap or check valve. Overflows must discharge to a location that drains away from the pool area such that the discharge remains visible when overflowing.

31. Electrical and Illumination Requirements.

Artificial lighting must be provided at all public swimming pools which are to be used at night or which do not have adequate natural lighting so that all portions of the pool, including the bottom, may be readily seen without glare.

(a) Underwater Lighting. Where underwater lighting is used, not less than 0.5 watts of incandescent lighting or 8.35 lumens must be provided per square foot of pool area. An adequate number of lights must be used and properly positioned so that all portions of the pool are clearly visible to an observer on the pool deck. Fiberoptic lighting may only be installed as a supplement to the minimum lighting requirements outlined above. Colored lights that do not provide for an equivalent light output to the wattage or lumens noted above for clear lights cannot be used.

(b) Area Lighting. Where underwater lighting is used, uniform area lighting must be provided for the deck area and directed toward the deck area and away from the pool surface insofar as practical. Illumination of the pool deck surface must be at least ten (10) foot candles of intensity, or not less than 0.6 watts of incandescent light or 10 lumens per square foot. Where underwater lighting is not used and night swimming is permitted, uniform area lighting must be provided in an amount of not less than thirty-two (32) foot candles of intensity, or not less than two 2 watts of incandescent light or 33.5 lumens per square foot of pool area in addition to 0.6 watts of incandescent light or ten (10) foot candles of intensity per square foot of deck area. These lights must be placed around the pool area such that all sections and depths of the pool are clearly visible at all times. Light fixtures located within the pool area must be protected by a non-breakable lens.

(c) Overhead Conductors, Wiring and Lights.

(i) Overhead conductors and wiring not in conduit must not pass within an area extending a distance of twenty (20) feet horizontally away from the inside edge of the pool walls, diving structures, observation stands, towers, or platforms. No pool can be constructed under an existing utility owned supply conductor in accordance with the current edition of the National Electrical Safety Code.

(ii) There shall be no light fixtures or conductor splices directly above the water surface at any outdoor pool. Indoor pools must comply with the same restriction except that light fixtures protected by a non-breakable lens are allowed.

(d) Wiring and grounding for lights and all electrical power for swimming pool equipment must conform to the codes of the current edition of the National Fire Protection Association (NFPA) National Electric Code. All electrical circuits within the pool area including all accessory equipment, electric drinking water fountains, and bathhouse/minimum toilet facility receptacles are required to meet the current edition of the NFPA National Electric Code; provided, however, all such circuits shall have ground fault protection regardless of their proximity to the pool. Exceptions may be granted for lighting and fixtures that are twenty-five (25) feet or more above the pool deck and would not pose a risk of electrocution. Junction boxes must be above the pool water level and must not be a trip hazard.

32. Instructions For Operation.

(a) The specifications and/or plans for all public swimming pools must include the provision that upon completion of any swimming pool, the builder must give the owner and his operators complete written and oral instructions in the operation of the pool and all equipment, in the chemistry of swimming pool water and specific details covering the maintenance of the equipment. Also, these instructions and provisions must consist of the operation of the entire facility under the builder's observation for a minimum of three (3) days. All valves must be permanently tagged and identified as to use and a valve operating schedule must be provided for every operation.

(b) Instructions, including the valve schedule, must be supplied in not less than two (2) copies. These must be encased in a water proof covering with one (1) copy permanently posted on the equipment room wall.

33. Equipment Acceptance.

Any equipment to be used in public swimming pools must be approved by the National Sanitation Foundation Testing Laboratory, Inc., Ann Arbor, Michigan, or other laboratories acceptable to the Department, where applicable.

34. Swimming and Deck Limits.

(a) The total number of persons which can safely utilize a swimming pool facility shall be based upon the sum of the following areas:

(i) Swimming Area. (The area between the transition point and the diving area) One (1) person for each twenty-five (25) square feet of surface area.

(ii) Shallow Area. One (1) person for each ten (10) square feet of surface area.

(iii) Deck Area. One (1) person for each thirty-three (33) square feet of the required minimum deck area.

(iv) Type "D" Pools. One (1) person for each ten (10) square feet of surface area.

(b) The pool capacity determination is not applicable for Type "C" and "E" pools.

(c) Diving Area. An area extending a ten (10) foot radius from the extremity of a diving board or tower will be considered as reserved for divers, and not more than one (1) person shall be permitted in the water in this area at any time diving is in progress. Only one (1) person is allowed on any diving board at one time.

35. Steps and Ladders.

At least one (1) ladder/steps must be provided for each seventy-five (75) feet of pool perimeter. Two (2) or more ladders/steps must be provided for all Type "A" and "B" pools.

(a) Ladders - All ladders must have a minimum of three (3) tread design and must include treads of non-slip construction. All ladders must be commercially-rated and designed so as to be secured tightly in place when the pool is in operation unless they are removed for certain aquatic events. Grab rail recess step type ladders can be used in lieu of the standard three (3) tread ladder.

(b) Steps - Steps shall have a minimum tread width of twelve (12) inches, a maximum rise of eleven (11) inches and a minimum length of thirty (30) inches. All step risers must be of uniform height (within one half (1/2) inch of each other) with the exception of the bottom riser. All step treads must be level with a tolerance for step slope of one half (1/2) inch. When radial steps are to be constructed, the minimum standards are shown in Figures 1, 2 and 3 as follows. All steps shall be non-slip and constructed in the shallow end of the pool only. Permanent black or dark colored edge stripes such as tile must mark steps. The edge stripe must be a minimum of two (2) inches wide, must be provided the entire length of each step, must be non-slip in texture, and must be installed on the run of each step so as to be clearly visible by patrons upon entering the pool. The step edge stripe must start within one (1) inch from the edge of the step.

(c) Handrails - Where steps are used, a minimum of one (1) handrail must be installed. All handrails must be securely anchored, extend over and anchor into the bottom step, and be easily accessible for exiting the pool. No portion of the handrail shall be closer than three (3) feet from any other handrail, unless Americans with Disabilities Act (ADA) requirements apply. No figure four type handrails may be installed except on fiberglass pools and Type "C" pools. Where the average step length, as measured from the front edge of the middle step, is over ten (10) feet in width there shall be one (1) additional handrail for every average ten (10) feet of step width or major fraction thereof and they shall be evenly spaced. Handrails must be of the removable type. Handrails shall be designed so as to be secured tightly in place when the pool is in operation unless they are removed for certain aquatic events.

(d) Tanning Ledges - When tanning ledges are provided, the maximum water depth shall be twelve (12) inches. If the distance from the tanning ledge to the coping exceeds eleven (11) inches, then a single step and handrail must be provided.

RADIAL POOL STEPS

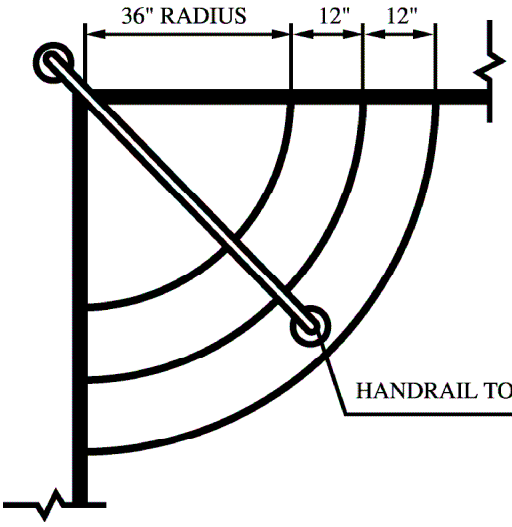

Figure - 1

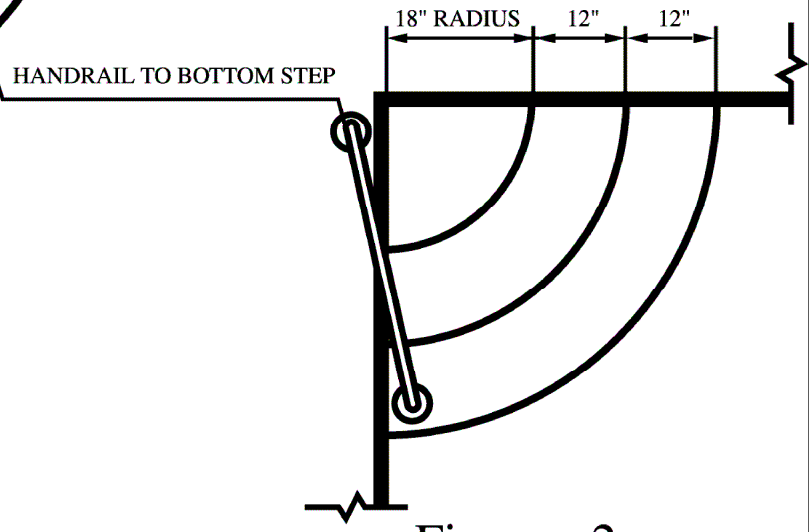

Figure - 2

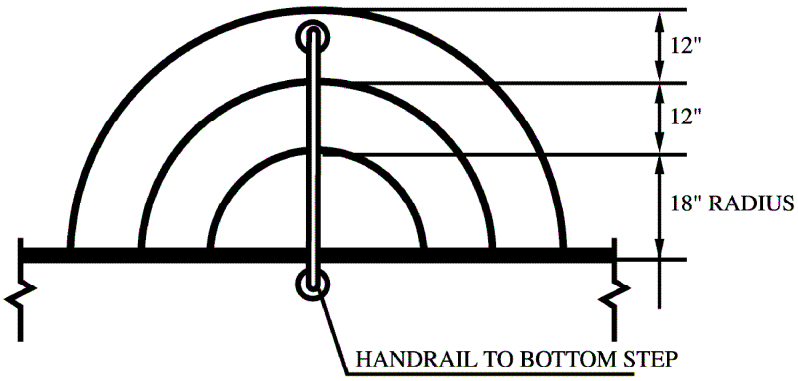

Figure - 3

36. Construction Variance.

When a pool contractor desires to use a construction procedure inconsistent with the regulations or use materials and/or equipment other than specified in these regulations a variance may be requested from the Department. Such a request must be submitted in writing and shall include a description of the material(s), equipment, and/or construction procedure(s) proposed, identify the material, equipment and/or procedure required by the regulation, and include proof of equivalency. This request for a variance will be considered by the Department for approval. The Department's decision on such a variance will be final.

37. Bridges.

Bridges over the pool shall be built so that they will not introduce any contamination to the pool water. The minimum height of the bridge shall be at least seven (7) feet from the bottom of the pool and at least four (4) feet above the surface of the pool. Minimum forty-two (42) inch high handrails shall be provided along each side of the bridge. The walking surfaces shall be constructed of concrete or nonabsorbent material having a non-slip finish. A sign must be posted at both ends of any bridge crossing over a pool stating in all capitalized letters "NO DIVING OR JUMPING FROM BRIDGE ALLOWED". This sign must be clearly visible to anyone walking over the bridge.

38. Portable Kiddie Slides.

Portable slides must comply with the requirements of Section G Paragraph 1, Section G Paragraph 2, Section G Paragraph 3(a), 3(b), 3(d)(vi), 3(d)(vii), 3(e)(ii), and 3(e)(iii). Portable slides are only allowed in Type "A" and "E" pools.

(a) The distance between the slide exit and the opposite side of the landing pool or other obstructions shall be a minimum of fifteen (15) feet.

(b) The slide must terminate no more than two (2) inches above the water surface and cannot terminate on an angle.

(c) Potable water supplies for wet slides shall be protected by proper backflow prevention and any piping or hose shall not be a trip hazard.

(d) Portable slides must be secured when not in use or when an attendant is not available.

(e) Where applicable or recommended by the manufacturer, it may be necessary to secure the slide to the deck with anchor bolts or other suitable mounting hardware.

39. Surge tank.

Where surge tanks are provided, a means to clean and maintain the tank shall be shown on the plans. Main drains must be located in the bottom of the tank.

D. PUBLIC SWIMMING POOL DESIGN REQUIREMENTS FOR TYPE "A" AND "B", AND "G" POOLS

1. Applicability.

Requirements of this section are applicable to all new construction and alterations of existing public swimming pools.

2. Pool Depths.

(a) The depth in the shallow portion must begin at three (3) feet and slope continually toward the deepest point of the pool.

(i) Where a pool is constructed with a maximum depth of five (5) feet, six (6) inches or less, the bottom must slope continually at a maximum of one (1) foot vertical to ten (10) feet horizontal and no lifeline is required.

(ii) Where the maximum pool depth exceeds five (5) feet, six (6) inches there shall be a lifeline between the shallow and the deep end which must be located at a point across the pool one (1) to two (2) feet on the shallow side of the transition point. Where there is no transition point, the lifeline must be at the four (4) foot, six (6) inch depth. The pool must slope continually from shallow end to the slope transition point; and the slope must not exceed one (1) foot vertical to ten (10) feet horizontal.

(b) Lifelines. The lifeline must be made of polyethylene or nylon rope with floats made of soft plastic or cork placed at not more than five (5) foot intervals. The lifeline must be minimum three-fourth (3/4) inches diameter and have floats at least five (5) inches by six (6) inches in size.

(c) Transition Point. Where the maximum pool depth exceeds five (5) feet, six (6) inches a permanent non-slip black or dark color tile stripe must be incorporated in the floor and the walls of the pool to mark the slope transition point. This tile stripe must be a minimum four (4) inches and a maximum six (6) inches wide and located at a point across the pool one (1) to two (2) feet on the shallow side of the transition point. Where there is no change in slope this line must be placed at the four (4) foot, six (6) inch depth.

(d) Zero-Depth Entry Pools. Zero-Depth entry pools are allowed in Type "A" and "B" pools only when a lifeline is placed at the two (2) to three (3) foot depth and a breakline tile stripe meeting the requirements of Section D Paragraph 2(c) is collocated with the lifeline.

(i) In addition to the required number of surface skimmers or perimeter gutter system, Zero-Depth entry pools must have either a gutter/trench with a grate cover installed along the zero depth area at an elevation which allows effective skimming at the trench at all times or two additional skimmers. Each of these additional skimmers must be located on each side of the zero depth entry at a water depth of between six (6) and twelve (12) inches. If the zero depth entry is

greater than forty (40) feet in length, a gutter with a grate is required. All gutter designs will require either a collection/surge tank or a trough with a depth of at least twelve (12) inches. All installations that require a gutter must install an auto-fill device.

(e) Diving Boards. At least thirteen (13) feet of unobstructed vertical distance must be maintained above any diving board. This thirteen (13) foot height must extend eight (8) feet to each side and twenty (20) feet ahead of the front end of the board. In case of multiple diving boards, the above vertical distance must be provided for each board. Where diving is permitted, minimum depths of pools and clearances for various pool elements must be as shown in the following diagrams and tables (following Section D(2)(j)). Pool widths must be a minimum of eighteen (18) feet throughout the diving section.

(f) Depths and Clearances. The depths and clearances shown in the chart must be used as the basis for determining the safety features of pools which are not rectangular in shape. Cross-sectional diagrams must be given so that minimum depths and clearances may be determined for pools of non-rectangular shape; a minimum of one (1) longitudinal and one (1) latitudinal cross-sectional diagram must be given for all pools. Where a pool is built to permit diving, but has no diving board installed, diving is permitted only at the point on the deep end where a board would be installed. This point must be marked on the pool coping with the lettering "Diving permitted from this point only." The lettering shall be a minimum of 4" high and shall be marked on the deck or coping at a maximum of 12" from the pool edge.

(g) Walls, Ledges, and Islands. All walls must be vertical. No ledges are permitted inside the main pool body. Islands and walkways are allowed inside the main pool body provided that they are above the normal water level and extend to the bottom of the pool floor.

(h) Seats. Seats may be allowed in the shallow portion of the pool in water depths of four (4) feet or less if completely recessed from the main body of the pool. Recessed shall mean thirty six (36) inches back from the main pool body and not contiguous to any steps. The seat shall be eighteen (18) inches wide and eighteen (18) inches shall be for leg room. The maximum water depth over the seat shall not exceed twenty (20) inches. The front edge of the seat must be marked with a black or dark colored, non-slip tile a minimum of two (2) inches wide. A non-slip tile reading "NO STEP" shall be placed on the seat (1 ½ inch lettering) and correspondingly on the deck (1 ½ inch lettering) with no more than five (5) feet between signs if the seat is wider than ten (10) feet, otherwise the "NO STEP" sign shall be placed in the middle of the bench.

(i) The depths of the shallow portion of a pool with racing lanes which are intended to be used for lap swimming may be increased to three and one-half (3 ½) feet or four (4) feet. The racing lanes must be marked in black tile or dark colored tile. This tile shall be non-slip. The tile lanes must be a minimum of six (6) inches wide and a maximum of twelve (12) inches wide.

(j) Construction tolerances shall be within plus or minus (+ or -) three (3) inches of design for overall pool length, width, or depth.

DEPTH – minimum

Stands and Boards Max to water	D-1 (ft)	D-2 (ft)	D-3 (ft)	D-4 (ft)	D-5 (ft)
Three (3) meter board	6	4.5	12.5	12	12
One (1) meter board	6	4.5	10.5	10	10
Deck level board (Less than 26-inches)	6	4.5	9	8.5	8.5
No board	6	4.5	8.5	8	8
No diving pool	3	3	3	3	3

LENGTH OF SECTION – minimum

Stands and Boards Max to water	A (ft)	B (ft)	C (ft)	D (ft)	E (ft)
Three (3) meter board	5	6	9	23	13
One (1) meter board	5	6	9	17	11
Deck level board (Less than 26-inches)	2.5	6	7.5	12	9
No board		6	6	12	
No diving pool					

D-1 shall be no farther out than a maximum of 15” from pool wall. Slope of D shall not exceed 1’-0” vertical to 3’-0” horizontal. The maximum values of A are 6’-0” for 1-Meter and 3-Meter boards and 4’-0” for deck level boards. Clearance above the board must extend the entire length of sections B, C and D. Depth D-5 is measured at midpoint of Section B where a diving board is not provided. Where a diving board is provided D-5 shall be measured from the tip of the board. The minimum distance between the diving well wall on the deep end and any opposite wall shall not be less than six (6) feet greater than the diving bowl dimensions (B, C and D). All diving boards that are placed at a height above water between those listed shall be made to comply with the listing that is greatest, e.g. 34” board shall comply with the one meter board height above water. Shallower water depths of 3 ½ feet or 4 feet will be considered for pools with racing lanes that will be used for competitive swimming and diving from stands.

Pool Specifications

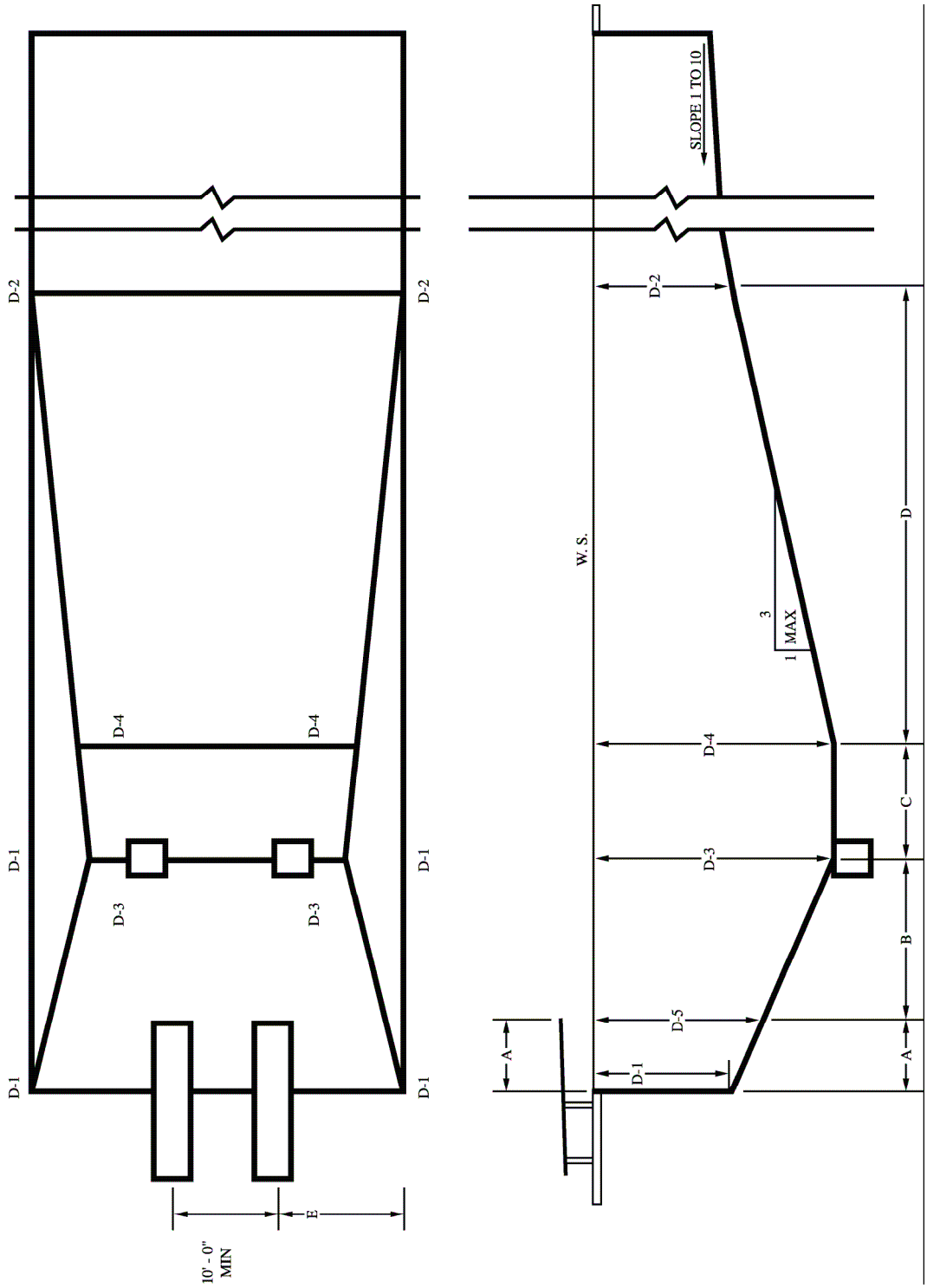

(k) Vanishing edge pools. Any vanishing edge pool that has a drop of eighteen (18) inches or less as measured from the top of the edge to the normal operating level in the receiving trough is not required to have safety netting. If the drop exceeds eighteen (18) inches, the Department may require the installation of safety measures (safety netting, grates, etc.) to prevent injury. Troughs must be designed to deter access and must have appropriate signs (i.e. "Keep Out", "Do Not Enter", etc.) troughs must be provided with appropriately sized main drains and designed to provide skimming action.

3. Diving Towers, Stands, and Sliding Boards.

Diving towers in excess of three (3) meters in height are not to be considered as acceptable in a public swimming pool without special provisions, controls and limitations on their use. No sliding boards are allowed in any Type "B" pool. All diving stands (starting blocks) installed at pools with racing lanes must be of the removable type.

4. Recirculation System.

(a) A recirculation system consisting of pumps, motors, piping, filters, inlets, outlets, disinfecting and other water conditioning equipment and necessary accessories must be provided for water purification in accordance with water quality criteria contained herein and must be designed to completely turnover the entire pool volume per the following schedule:

(i) Type "A" six (6) hours

(ii) Type "B" six (6) hours; except Type "B" lazy rivers under sixty-thousand (60,000) gallons which shall have a turnover time of four (4) hours

(b) The recirculation system shall be designed to operate on a twenty-four (24) hour basis. The normal pattern of recirculation developed must be fifty (50) percent flow through the overflow or skimming facilities and fifty (50) percent through the main drains. The recirculation system must be designed with adequate capacity such that one hundred (100) percent of the recirculation flow can pass through the overflow or skimming facilities and one hundred (100) percent through the main drains.

5. Vacuum Lines.

No vacuum outlets less than six (6) inches or more than eighteen (18) inches below the normal operating water level will be allowed. The measurement will be from the center of the vacuum outlet fitting to the water surface. If skimmer vacuum attachment is used, this requirement does not apply.

6. Pool Deck.

The pool deck must be constructed in accordance with Section C, Paragraph 6.

7. Pool Width.

Type “A”, “B”, and “G” pools must be a minimum of ten (10) feet wide, with the exceptions of alcoves and lazy rivers. Lazy rivers must be a minimum of six (6) feet wide. Alcoves are recessed areas of the pool where seats may be located.

8. Type “G” Pools.

Each zone of a type “G” pool must maintain the required turnover rate for it’s intended usage type (e.g. a type “C” pool has a 1 hour turnover rate, therefore a kiddie pool zone would require a 1 hour turnover rate). To ensure that this requirement is met, a separate return line must be provided for each zone. Each return line must be provided with a flow meter that meets the requirements or R.61-51.C(18), or other Department-approved method to ensure the required flow rate per zone is maintained.

E. DESIGN REQUIREMENTS FOR TYPE "C" POOLS

1. Applicability.

Requirements of this section are applicable to all new construction and alterations of existing public swimming pools.

2. Type "C" Pools.

In addition to meeting all other applicable requirements of these regulations as found in Section C, Type "C" pools must also meet the following:

(a) There must be a minimum of two (2) inlets and two (2) main drains and at least one (1) surface skimmer positioned and operated in accordance with R.61-51.C.26(b).

(b) When only one (1) skimmer is provided and the equalizer outlet is installed on the pool floor, it must be equipped with a minimum of two (2) interconnected suction fittings spaced at least twelve (12) inches apart. The interconnecting line must be sized to accommodate one hundred (100) percent of the recirculation flow.

(c) Main drains shall be located on the pool bottom floor.

(d) Inlets and outlets must be provided and arranged to produce complete recirculation of pool water and the maintenance of a uniform and adequate level of disinfecting medium at all times.

(e) A means of completely draining the contents of the pool to waste must be provided without passing through the filter. This may be done by a gravity waste line directly from the pool or by pumping and by-passing the filter.

(f) The maximum depth for a wading pool shall be eighteen (18) inches at the center. The bottom must have a maximum slope of no greater than five-eighths (5/8) inches per foot toward waste outlets or main drains. The depth at the perimeter may be zero (0) feet.

3. Spray Pools.

In a spray pool, water must be designed to drain away freely as it sprays over the area. Water quality, wall and floor construction must meet the same requirements as set forth for public swimming pools. The bottom must have a minimum slope of not less than one-fourth (1/4) inch per foot (nor maximum of more than five-eights (5/8) inch per foot) toward waste outlets. All equipment drains, steps, gadgets, and toys must be installed per the manufacturer's recommendations.

4. Recirculation System.

A recirculation system consisting of pumps, motors, piping, filters, inlets, outlets, disinfecting and other water conditioning equipment and necessary accessories must be provided for water purification in accordance with water quality criteria contained herein and must be

designed to completely turnover the entire pool volume in one (1) hour. The recirculation system shall be designed to operate on a twenty-four (24) hour basis. The normal pattern of recirculation developed must be fifty (50) percent flow through the overflow or skimming facilities and fifty (50) percent through the main drains. The recirculation system must be designed with adequate capacity such that one hundred (100) percent of the recirculation flow can pass through the overflow or skimming facilities and one hundred (100) percent through the main drain.

5. Pool Deck.
The pool deck must be constructed in accordance with Section C, Paragraph 6.

6. Sliding Boards.
No sliding boards are allowed in any Type "C" pool.

7. Steps.
If installed, one set of steps designed in accordance with Section C, Paragraph 35 shall be provided.

8. Fill Line.
Kiddie pools may be filled by a hose bibb protected by an ASSE 1024 listed residential dual check or other Department approved backflow prevention device.

9. Automatic Controllers.
All new Type "C" pools must be equipped with automatic controls to provide adequate feed rate of halogen and pH adjustment chemicals in order to keep the disinfectant and pH at the required levels on a continuous demand basis. A warning light or indicator shall be provided in a visible location for supervisory control. The device shall indicate absence of chemicals in feeders, improper adjustment of chemical dosage, or any other mechanical or operational malfunctions, e.g. recirculation flow stops.

F. DESIGN OF TYPE "D" POOLS

1. Applicability.

Requirements of this section are applicable to all new construction and alterations of existing public swimming pools.

2. Type "D" Pools.

In addition to meeting all other applicable requirements of these regulations as found in Section C, including steps and handrails, except where fiberglass spas are used, figure four handrails may be acceptable provided they extend over the last step. Type "D" pools must also meet the following:

(a) There must be a minimum of two (2) inlets, two (2) main drains to be located on the pool bottom floor and at least one (1) surface skimmer or gutter system positioned and operated in accordance with R.6-51.C.26.

(b) All drains providing water to the booster system must be located on the pool bottom floor.

(c) Inlets and outlets must be provided and arranged to produce complete recirculation of pool water and the maintenance of a uniform and adequate level of disinfecting medium at all times.

(d) The maximum depths for Type "D" pools shall be four (4) feet. Type "D" pools must be provided with a means of completely draining the contents of the pool to waste without passing through the filter. This may be done by a gravity waste line directly from the pool or by pumping and by-passing the filter.

(e) All Type "D" pools must have a single timer set for a maximum of 15 minutes which must turn on and off the hydro pump and blower if provided. This timer switch must be inaccessible to persons while in the spa.

(f) An emergency cut-off switch must be provided in the pool area which, when triggered, will simultaneously shut off the spa booster and recirculation pumps. This switch must be clearly visible, labeled, easily accessible at all times, and no greater than a twenty five (25) foot distance from the entrance steps of the spa.

(g) The top front edge of seats must be marked with a black or dark colored stripe in accordance with R.61-51.D.2(h).

(h) No sliding boards are allowed in Type "D" pools.

3. Recirculation System.

(a) A recirculation system consisting of pumps, motors, piping, filters, inlets, outlets, disinfecting and other water conditioning equipment and necessary accessories

must be provided for water purification in accordance with water quality criteria contained herein and must be designed to completely turnover the entire pool volume per the following schedule based upon pool volume:

(i) Up to one thousand and five hundred (1,500) gallons: one-half (1/2) hour.

(ii) One thousand and five hundred (1,500) gallons up to four thousand (4,000) gallons: one (1) hour.

(iii) Four thousand (4,000) gallons up to eight thousand (8,000) gallons: two (2) hours.

(iv) Eight thousand (8,000) gallons up to sixteen thousand (16,000) gallons: four (4) hours.

(v) Over sixteen thousand (16,000) gallons: six (6) hours.

(b) The recirculation system shall be designed to operate on a twenty-four (24) hour basis. The normal pattern of recirculation developed must be fifty (50) percent flow through the overflow or skimming facilities and fifty (50) percent through the main drains. The recirculation system must be designed with adequate capacity such that one hundred (100) percent of the recirculation flow can pass through the overflow or skimming facilities and one hundred (100) percent through the main drain.

4. Pool Deck.
The pool deck must be constructed in accordance with Section C, Paragraph 6.

5. Pool Temperatures.
For heated pools a thermostat control must be provided with an automatic cut-off for an upper limit of 104 degrees Fahrenheit and above.

6. Automatic Controllers.
All new Type "D" pools shall be equipped with automatic controls to provide adequate feed rate of halogen and pH adjustment chemicals in order to keep the disinfectant and pH at the required levels on a continuous demand basis. A warning light or indicator shall be provided in a visible location for supervisory control. The device shall indicate absence of chemicals in feeders, improper adjustment of chemical dosage, or any other mechanical or operational malfunctions, e.g. recirculation flow stops.

G. DESIGN OF TYPE "E" POOLS

1. Applicability.

Requirements of this section are applicable to all new construction and alterations of existing public swimming pools.

2. Type "E" Pools.

In addition to all other applicable requirements of these regulations found in Section C, Type "E" pools must also have a recirculation system for filtering and disinfecting the water used, except as may be justified to and found acceptable by the Department.

3. Waterslides and Flumes.

(a) The slopes and radii of each flume and flume section must be acceptable to the Department. Each flume must be properly banked when used in any curved section; regardless of degree of curvature. Each flume must be designed to enter the landing pool in a safe manner. The landing pool must be of dimensions suitable to prevent accidental collision between users and/or walls. It may be necessary to obtain a certified inspection permit from the South Carolina Department of Labor if the law so provides for same.

(b) All sections of a flume must be properly formed and sealed together so as to prevent possible abrasions or injuries, i.e., no protrusions or gaps between sections. All protruding edges need to be deburred and polished so that there will be no cutting, pinching, puncture, or abrasion hazards. The permit for this type of facility will be invalidated, unless a good safety record is maintained.

(c) Details on submission of plans for waterslides must include:

(i) Detailed layout of the flumes indicating elevations, slopes, lengths of sections, and radius of each curve in the flumes.

(ii) Detailed cross sectional views of the flume on a straight away and going into all curves. The average water depth must be indicated.

(iii) Structural details of starting pools, flumes, landing pools, and if applicable, surge pools.

(iv) Total water volume for the whole waterslide facility.

(v) Top and profile views of the starting pool.

(vi) Top and profile views of the surge pool if applicable.

(vii) Top and profile views of the landing pool to include all equipment and applicable equipment spacing with all dimensions given or drawn to scale.

(d) Flume Design Criteria:

(i) The overall average slope of a flume shall conform to the design criteria of the recommendations of the ASTM F 2376, "Standard Practice for Classification, Design, Manufacture, Construction, and Operation of Water Slide Systems."

(ii) The slope of each flume section shall conform to the design criteria of the recommendations of the ASTM F 2376, "Standard Practice for Classification, Design, Manufacture, Construction, and Operation of Water Slide Systems."

(iii) Each flume shall be properly banked when used in any curved section; regardless of the degree of curvature. This is to properly ensure that the slider's body will remain within the flume.

(iv) Test runs down each channel shall be conducted to ensure its safety prior to formally opening the facility.

(v) A detailed engineering analysis of the flume structure must be submitted by the engineer assuming responsibility for the facility to ensure the strength and integrity of the material and structure under all circumstances.

(vi) Distance between the side of a flume exit and a landing pool wall shall be a minimum of five (5) feet.

(vii) Distances between sides of adjacent flume terminuses shall be a minimum of six (6) feet.

(viii) The distance between a flume exit and the opposite side of the landing pool or other obstruction(s) shall be a minimum of twenty (20) feet.

(ix) Flumes shall terminate a maximum of two (2) inches above the water surface and the flume must be level for a minimum distance of ten (10) feet from the flume's end. Flumes cannot terminate at an angle.

(x) Safe entry into the landing pool shall be provided through a deceleration distance of at least twenty (20) feet.

(e) In addition to requirements for public swimming pools the following must also be met:

(i) A one hour filter turnover time is required.

(ii) Where night use is allowed, area lighting of at least two (2) watts per square foot of deck area shall be provided at the landing pool, along the slide, and at the starting pool.

(iii) Adequate supervision of all slide flumes entry and exit points must be provided.

(f) All items not covered above with regard to Type "E" Pools shall use the current edition of the ASTM F 2376, "Standard Practice for Classification, Design, Manufacture, Construction, and Operation of Water Slide Systems" as guidelines.

4. Lazy Rivers.
Lazy rivers with volumes of 60,000 gallons or greater shall have a minimum turnover time of six (6) hours. Those with volumes less than 60,000 gallons shall have a minimum turnover time of four (4) hours.

5. Wave Pool, Activity Pools and Kiddie Play Parks.
Wave and activity pools with volumes of 60,000 gallons or greater shall have a minimum turnover time of six (6) hours. Those with volumes less than 60,000 gallons shall have a minimum turnover time of four (4) hours. Kiddie Play Parks shall have a minimum turnover time of one (1) hour.

6. Recirculation System.
A recirculation system consisting of pumps, motors, piping, filters, inlets, outlets, disinfecting and other water conditioning equipment and necessary accessories must be provided for water purification in accordance with water quality criteria contained herein and must be designed to completely turnover at the rate required in Paragraphs 4 and 5 above. The recirculation system shall be designed to operate on a twenty-four (24) hour basis. The normal pattern of recirculation developed must be fifty (50) percent flow through the overflow or skimming facilities and fifty (50) percent through the main drains. The recirculation system must be designed with adequate capacity such that one hundred (100) percent of the recirculation flow can pass through the overflow or skimming facilities and 100 percent through the main drain. Waterparks may have several pools on one (1) main recirculation system provided it is proven to the Department that each pool meets the required turnover rate and the Department finds the overall design acceptable.

7. Automatic Controllers.
All new Type "E" pools with water volumes of 1,500 gallons or less, shall be equipped with automatic controls to provide adequate feed rate of halogen and pH adjustment chemicals in order to keep the disinfectant and pH at the required levels on a continuous demand basis. A warning light or indicator shall be provided in a visible location for supervisory control. The device shall indicate absence of chemicals in feeders, improper adjustment of chemical dosage, or any other mechanical or operational malfunctions, e.g. recirculation flow stops.

8. Pool Deck.
The pool deck must be constructed in accordance with R.61-51.C.6.

H. DESIGN OF TYPE "F" POOLS

1. Applicability.

Requirements of this section are applicable to all new construction and alterations of existing public swimming pools.

2. Section C Applicable.

In addition to meeting all other applicable requirements of these regulations as found in Section C, Type "F" pools must also meet the following requirements of this section.

3. Recirculation System.

(a) A recirculation system consisting of pumps, motors, piping, filters, inlets, outlets, disinfecting and other water conditioning equipment and necessary accessories must be provided for water purification in accordance with water quality criteria contained herein and must be designed to completely turnover the entire pool volume in six (6) hours.

(b) The recirculation system shall be designed to operate on a twenty-four (24) hour basis. The normal pattern of recirculation developed must be fifty (50) percent flow through the overflow or skimming facilities and fifty (50) percent through the main drains. The recirculation system must be designed with adequate capacity such that one hundred (100) percent of the recirculation flow can pass through the overflow or skimming facilities and one hundred (100) percent through the main drain.

4. Automatic Controllers.

All new Type "F" pools with water volumes of 1,500 gallons or less, must be equipped with automatic controls to provide adequate feed rate of halogen and pH adjustment chemicals in order to keep the disinfectant and pH at the required levels on a continuous demand basis. A warning light or indicator shall be provided in a visible location for supervisory control. The device shall indicate absence of chemicals in feeders, improper adjustment of chemical dosage, or any other mechanical or operational malfunctions, e.g. recirculation flow stops.

5. Pool Deck.

The pool deck must be constructed in accordance with R.61-51.C.6.

I. EQUIPMENT CHANGES AND ALTERATIONS

1. Applicability.

All public swimming pools, no matter when constructed, must comply with the requirements of this section. A change order is required for any interior pool coating, equipment or structural modification which is not an identical replacement for the originally approved design. All change order requests must be approved by the Department in writing prior to commencement of work. The request must be made using the Swimming Pool Change Order Request Form.

2. Structural Changes.

In addition to a change order request, plans and specifications detailing any proposed alteration or modification requiring structural changes that affect the shape or structural components of a public swimming pool must be submitted following the requirements of Section B of these requirements, including submission of the appropriate fee.

3. Equipment Changes.

Written notification detailing any proposed equipment changes which do not conform to original approved specifications must be submitted to the Department in writing on an approved change order request form. The request must be approved by the Department before any equipment can be installed on any public swimming pool. Equipment must comply with the requirements of Section C of these regulations.

4. Pump and Filter Changes.

If proposed equipment changes involve the pump and filter, reasonable effort must be made to comply with the turnover rates specified in these regulations. Equipment room piping must be upgraded where necessary to meet these regulations when replacing both the pump and filter.

5. Deck Changes.

A change order request must be submitted detailing the proposed work. If replacing existing decking, painting or resurfacing, the new decking must comply with applicable portions of R.61-51.C.6 and R.61-51.C.7. Temporary pool enclosures may be installed with prior Department approval provided that they do not hinder or limit access by emergency personnel and minimum deck widths are maintained. Adequate lighting must be provided if the facility will be used for night swimming.

6. Pool Resurfacing and Painting.

A change order request must be submitted stating the type of material and color to be used. The Department may request manufacturer's literature and specifications for new or non-conventional products. The work must meet the applicable portions of Sections C, D, E, F, G, and H.

7. Piping Changes.

A change order is required for piping changes beyond routine repair. In addition to a change order request, plans and specifications detailing any proposed alteration requiring piping

changes that affect the location or pipe size of the overall recirculation system or a major fraction of the system of a public swimming pool must be submitted following the requirements of Section B of this regulation, including submission of the appropriate fee. When replacing pipe, a reasonable effort must be made to comply with applicable portions of R.61-51.C.24.

8. New Construction.

Changes to new construction prior to completion must be approved by change order prior to any inspection. As-built drawings meeting the requirements of Section B must be approved by the Department prior to the final inspection.

9. Slides.

The addition of slides to a previously approved pool will be permitted by:

(a) General change order when the slide is considered portable and intended only for children.

(b) Revised plans and specifications requiring a complete submittal in accordance with Section B when the installation will be permanent or have significant structural components.

10. Other Changes.

All other changes from the originally permitted plans, specifications, or previously approved change orders must comply with these regulations where applicable.

J. OPERATION AND MAINTENANCE FOR ALL TYPE POOLS

1. Applicability.

All public swimming pools, no matter when constructed, must comply with requirements of this section. All pools and pool equipment must be operated and maintained in accordance with the permitted plans and specifications or approved change order.

2. Operating Permits.

No pool may operate without a valid operating permit. Operating permits are valid for a period of one (1) year beginning on April 1, and ending on March 31 of any calendar year. Operating permit fees are due by February 15 of each calendar year and are considered delinquent if not received by March 15th of each calendar year. The current operating permit must be prominently displayed at the pool on or near the pool rules sign.

3. Address and Ownership Changes.

It shall be the owner's responsibility to notify the Department in writing of any address or ownership changes.

4. Housekeeping.

(a) The bathhouse and minimum toilet facilities must be kept clean with the floors and walls cleaned as often as necessary to maintain good sanitary conditions and kept as dry as possible. Showers must be scrubbed at least daily and proper disinfectant applied to the floors. All plumbing fixtures must be kept in good operating condition. Toilet paper and soap must be available in the dispensers at all times the pool is open. If public towels are provided, these towels must be laundered after each use. The pool, including walkways, diving boards, ladders, etc., must be kept clean. The surrounding grounds must be kept free of trash and litter. All pools must have a trash receptacle at the pool site.

(b) No glass of any kind or any other material that may be a hazard to bathers' feet or bodies will be allowed in the pool area. No furniture constructed with glass components may be located within the pool area.

5. Water Supply.

All water used in public swimming pools, drinking fountains, bathhouse, or minimum toilet facilities, must be from a Public Drinking Water System which has been approved by the Department.

6. Drinking Water Fountain.

Drinking water fountains, where installed, must be properly maintained. All electric drinking fountains must be equipped with ground fault interrupters.

7. Sanitary Sewage.

The disposition of sanitary sewage from the bathhouse or minimum toilet facilities must be into a sanitary sewer, a septic tank, or other waste treatment facility which has been approved by the Department.

8. Equipment Enclosure.

An enclosure must be provided to prevent unauthorized access to pool operating equipment. The structure shall protect the equipment from vandalism. This enclosure must be of adequate height and size to enable required equipment maintenance and designed to drain away excess water. It must be adequately illuminated and ventilated. The equipment enclosure room is to be used specifically to house equipment for the pool's recirculation, filtration, and disinfection.

9. Recirculation System.

The recirculation system must be operated on a twenty-four (24) hour basis during the swimming season unless it can be demonstrated by the owner or designated agent that water quality can be maintained with fewer hours of operation. The recirculation system must be operated during posted pool hours.

10. Accidents.

Any death, injury, or accident requiring an EMS response, an emergency room visit, or hospitalization must be reported to the Department by the owner ordesignated agent in writing on a Department approved form within seventy-two (72) hours of the occurrence.

11. Safety Precautions.

(a) One or more lifeguards shall be on duty during operation hours at Type "A" and "E" pools. The minimum lifeguard requirements are listed in paragraph R.61-51.J.11(a)(i). Lifeguards must have their current certifications available for inspection while on duty. Lifeguards, when on duty, shall have no other duty but to supervise the swimmers.

(i) As a condition of obtaining and maintaining an operating permit, all Type "A" public swimming pools shall provide lifeguards in accordance with the following:

(A) A public swimming pool of three thousand (3,000) square feet or fewer must have:

(1) One (1) lifeguard for one (1) through twenty-five (25) patrons;

(2) Two (2) lifeguards for twenty-six (26) through fifty (50) patrons;

(3) Three (3) lifeguards for fifty-one (51) through one hundred-fifty (150) patrons;

(4) Four (4) lifeguards for one hundred fifty-one (151) through two hundred-fifty (250) patrons;

(5) One (1) additional lifeguard for each one hundred patrons greater than two hundred-fifty (250) patrons

(B) A public swimming pool of three thousand one (3,001) square feet through six thousand (6,000) square feet must have:

(1) Two (2) lifeguards for one (1) through twenty-five (25) patrons;

(2) Three (3) lifeguards for twenty-six (26) through fifty (50) patrons;

(3) Four (4) lifeguards for fifty-one (51) through one hundred-fifty (150) patrons;

(4) Five (5) lifeguards for one hundred fifty-one (151) through two hundred-fifty (250) patrons;

(5) One (1) additional lifeguard for each one hundred patrons greater than two hundred-fifty (250) patrons

(C) A public swimming pool of six thousand one (6,001) square feet through nine thousand (9,000) square feet must have:

(1) Two (2) lifeguards for one (1) through twenty-five (25) patrons;

(2) Three (3) lifeguards for twenty-six (26) through fifty (50) patrons;

(3) Five (5) lifeguards for fifty-one (51) through one hundred-fifty (150) patrons;

(4) Six (6) lifeguards for one hundred fifty-one (151) through two hundred-fifty (250) patrons;

(5) One (1) additional lifeguard for each one hundred patrons greater than two hundred-fifty (250) patrons

(D) A public swimming pool of greater than nine thousand (9,000) square feet must have:

(1) Three (3) lifeguards for one (1) through twenty-five (25) patrons;

(2) Four (4) lifeguards for twenty-six (26) through fifty (50) patrons;

(3) Six (6) lifeguards for fifty-one (51) through one hundred-fifty (150) patrons;

(4) Seven (7) lifeguards for one hundred fifty-one (151) through two hundred-fifty (250) patrons;

(5) One (1) additional lifeguard for each one hundred patrons greater than two hundred-fifty (250) patrons

(ii) A public swimming pool that is required to have only one lifeguard shall, at all times, have at least one additional pool staff employee present and available to make an emergency call if necessary.

(iii) Any request for a variance from the lifeguard requirements listed in R.61-51.J.11(a)(i) must be made in writing and must include a site-specific evaluation that demonstrates proof of equivalency with the provisions in R.61-51.J.11(a)(i). The Department will consider the variance request and will provide written notice of its decision.

(iv) Lifeguard requirements for Type "E" public swimming pools.

(A) Type "E" pools shall submit to the Department a lifeguard coverage plan. The lifeguard coverage plan must contain notification that the pool chooses to follow the lifeguard requirements enumerated in R.61-51.J.11(a) for Type "A" pools or, in the alternative, provide the following information:

(1) A pool schematic or diagram that shows lifeguard positions or stations along with sightlines;

(2) The number of lifeguards used during all expected conditions of facility operations. The pool surface area and user loading must be taken into account;

(3) The plan must include references, standards, and information from pool safety consultants and or other experts in pool safety and lifeguard coverage.

(B) Upon Department approval, Type "E" public swimming pools shall provide lifeguards in accordance with their approved plan. Until approval is received, Type "E" pools must follow the lifeguard requirements enumerated in R.61-51.J.11(a) for Type "A" pools.

(b) Type "A" and "E" pools must be locked when not under lifeguard supervision. All pools must be locked when the pool area is not open for patrons.

(c) Each Type "E" facility must provide attendants during operation of the facility to control the spacing and number of patrons utilizing each ride and to ensure and maintain the safe egress of all sliders out of the landing pool.

(d) At least one unit of life saving equipment must be inside the fence and be within two hundred (200) feet walking distance from any point on the pool perimeter and must be readily accessible and functional during posted pool hours. Life saving equipment is not required for Type "C" and "D" pools. Shepard's crook and life ring are not required for Type "A" and "E" pools if rescue tubes are provided.

(e) For all Type "A" and "E" pools one unit of emergency equipment must be readily accessible and functional during posted pool operating hours.

(f) All Type A and E pools must have a first aid kit. This kit must be readily accessible during posted pool hours.

(g) A toll free emergency notification device to notify emergency personnel must be provided within a two hundred (200) foot walking distance of the pool and in a location that it is easily accessible during the hours that the pool is in operation. Only permanently-mounted notification devices are acceptable to the Department. Mobile, voice over internet, or cordless telephones are not an acceptable alternative to permanently-mounted emergency notification devices. The physical address of the pool must be displayed at the emergency notification phone or device in a manner that is permanent and weather resistant.

(h) Signs in accordance with R.61-51.C.28 must be posted in a conspicuous place in the pool area for all pools. A single sign, if used for multiple pools must be clearly visible from each body of water.

(i) All diving boards and handrails must be maintained in a safe condition. Handrails and ladders must be rigidly secured while the pool is in operation and must comply with R.61-51.C.35.

(j) The lifeline must be maintained in good condition and kept in place except when lap swimming or routine maintenance is conducted. The lifeline must conform to the requirements listed in R.61-51.D.2(b).

(k) All removable diving stands must be removed when not in use.

(l) Any automatic vacuum systems must be removed from the pool during the hours the pool is open to the general public. In-floor cleaning systems must not be in operation during hours that the pool is open.

12. Swimming Limit.
The swimming limits are determined in accordance with R.61-51.C.34 and must be posted on the pool rules sign.

13. Water Clarity.
The water must be sufficiently clear to plainly view the main drains from the deck of the pool at all times when the pool is open. The viewer must be able to clearly distinguish the type, shape, and number of gratings (openings) of the main drains when standing at the edge of the pool deck nearest that main drain.

14. Water Quality

(a) A pool water quality test kit must be available at the facility during posted operating hours. This kit's condition must allow for accurate readings of free chlorine, bromine, pH, and cyanuric acid, if used.

(i) The DPD method or methodology approved either by the USEPA or the current edition of Standard Methods must be used to obtain free chlorine/bromine levels.

(ii) Samples for water quality testing shall be obtained at poolside.

(b) The following levels must be maintained for all pools:

Chlorine	1 to 8 parts per million (ppm or mg/L) free chlorine
Bromine	2.3 to 17.6 parts per million (ppm or mg/L)
pH	7.0 to 7.8 standard units

(c) All outdoor pools using chlorine may be stabilized with cyanuric acid. When used, the cyanuric acid level must not exceed two hundred (200) parts per million for calendar year 2009, one hundred fifty (150) parts per million for 2010, and one hundred (100) parts per million beginning in 2011. Indoor pools need not be stabilized.

(d) There will be no hand feeding of chemicals while the pool is open for swimming. The pool shall remain closed until chemical levels are within Department approved limits.

(e) In all cases of biological or chemical contamination of the pool water, the pool shall be immediately closed and the facility operator shall follow all current Department

guidance in addressing the contamination before reopening of the pool. Biological contamination such as fecal, blood, or other body fluids shall be treated using guidance published by the Centers for Disease Control (CDC) on their healthy swimming web site. Procedures other than those provided by the Department may be approved on a case-by-case basis.

15. Automatic Controllers.

Where automatic controllers are installed, the equipment shall be maintained in proper operating condition at all times. This maintenance shall include all of the manufacturers periodic service and calibration schedules for the controller and associated monitoring equipment.

16. Pool Temperatures

(a) Pool, spa, lazy river, or other pool type temperatures shall not exceed 104 degrees Fahrenheit.

(b) The temperature of each heated Type "D" pool must be monitored and posted by one of the following ways:

(i) Every two hours and posted on the spa caution sign.

(ii) Continuously with automated equipment and the temperature displayed within sight of the spa.

(iii) A shatter-resistant thermometer placed in the spa so that spa users can read it.

17. Operation Reports.

(a) Daily operation reports shall be maintained at every public pool. These shall include, as a minimum, readings of chlorine/bromine and pH. Chlorine/bromine and pH shall be checked daily or more frequently during operating hours to ensure the facility maintains required water quality standards for chlorine/bromine and pH. Cyanuric acid levels, if applicable, must be checked and recorded weekly.

(b) Results must be annotated on a bound log, with consecutively numbered pages, that is acceptable to the Department. The date, time and actual numerical reading must be listed on the report. Instrument monitoring shall not be used in lieu of physical water sampling at poolside. The report must be initialed at each reading and signed by the pool operator or his/her designated agent.

(c) Reports must be available for Department staff at time of inspection. In addition, reports shall be maintained and available at the facility for the previous eighteen (18) months.

18. Pool Operator

(a) All public swimming pools shall be operated under the direction of a qualified swimming pool operator who holds a valid South Carolina Pool Operator's certification issued by a party approved by the Department. Specific criteria shall be established by the Department for this approval process.

(b) The pool operator of record must inspect each public swimming pool a minimum of three (3) times per week during operation. Results of this inspection shall be annotated in the facility's bound log book and initialed by the pool operator.

19. Depth Markers.

All pools must comply with the depth marker requirements listed in R.61-58.C(7) when a Change Order Request Form has been approved by the Department for recoating or resurfacing of the interior of the pool or for resurfacing of the deck.

20. Bacteriological Quality.

The Department may take samples as necessary for bacterial analysis for each pool. The Department may also require that the owner sample the pool water for fecal coliform and have it analyzed by a certified laboratory. Any such sample shall be analyzed for fecal coliform bacteria in accordance with approved drinking water standard methods. The presence of any fecal coliform bacteria will indicate unsatisfactory water quality and will result in facility closure until satisfactory results are obtained.

21. Inspection of Facilities and Sampling of Pool Water.

(a) All public pools must be accessible for inspection by authorized representatives of the Department during the posted pool operating hours unless a sign is posted indicating that the pool is closed. Equipment rooms and associated chemical storage areas must also be accessible during pool inspection.

(b) It is the owner's or designated agent's responsibility to correct those items not in compliance with these regulations.

22. Facility Closure.

If the public swimming pool is closed for six (6) months or longer, the facility shall be appropriately covered with a commercially manufactured pool cover or drained of stagnant water, cleaned, and secured with a fence to prevent access. If drained, care should be taken to ensure that the facility is not damaged by subsurface hydro-static pressure. If a public swimming pool is to be permanently closed, for a period in excess of twenty-four (24) consecutive months, the pool shall be filled in or removed and the water and drainage connections removed. Once a pool is filled in, there should be no subsequent settling that causes water to pond. Facility closures require written notification to the Department.

23. Operating Permit Fees.

The Department shall collect annual operating permit fees and late fees as specified in R. 61-30, *Environmental Protection Fees.*

24. Operation and Maintenance Variance.

When a pool owner or designated agent desires to operate a public swimming pool under a standard other than specified in these regulations a variance may be requested from the Department. Such a request must be submitted in writing and shall include a description of the standard proposed, identify the standard required by the regulation and include proof of equivalency. This request for a variance may be considered by the Department for approval. The Department's decision on such a variance will be final and will be made in writing.

K. POOL CLOSURES AND ENFORCEMENT

1. Closure of Public Swimming Pools.

(a) Public Swimming Pools are to be closed immediately by the owner or his/her designated agent under the following conditions:

(i) When a public pool has not been issued a valid annual operating permit from the Department.

(ii) When the required number of lifeguards are not on duty at Type "A" and Type "E" pools or Type "B" pools choosing to use certified lifeguards in lieu of the required "No Lifeguard on Duty" signs.

(iii) When any pool is cloudy such that the main drains are not visible and/or the number of openings in the main drain cannot be counted.

(iv) When any item of life saving equipment is missing, defective or not readily accessible in the pool area.

(v) When the telephone/emergency notification device is missing, defective, or not accessible.

(vi) When an imminent safety hazard exists that poses a threat of injury or illness to bathers.

(vii) When the free residual chlorine or equivalent halogen reading is less than 1.0 parts per million (ppm) or greater than 8.0 parts per million (ppm).

(viii) When the pH is less than 7.0 or greater than 7.8.

(ix) When the disinfection, recirculation, automated control system used to adjust water chemistry, or filtration system is not fully operational.

(x) When the pool log is not available or not properly maintained.

(xi) When fecal coliform is present in the pool water.

(xii) When the temperature of any type pool exceeds 104 degrees Fahrenheit.

(xiii) When "Pool Rules", "No Diving", spa "Caution", "No Lifeguard on Duty", or "Pool Operator" signs are not posted in accordance with R.61-51.C.28(a) through (f).

(xiv) When time limits specified by the Department have been exceeded for the correction, repair, or replacement of defective, missing, or unauthorized equipment.

(xv) When the facility fails to retain or produce proof of the services of a properly credentialed pool operator.

(xvi) When the existing pool perimeter fencing and/or entrance gate or door do not meet the requirements of R.61-51.C(8).

(b) Where the owner or designated agent fails to close, or is not available to close the swimming pool under any of the above circumstances, the Department shall close the swimming pool and post "No Swimming" signs.

(c) In every case of pool closure, one or more "No Swimming" signs shall be posted conspicuously around or inside the affected pool enclosure. The owner or designated agent shall require all swimmers to leave the pool water. When closed by the owner at Department request, the swimming pool may be reopened after the noted deficiencies have been corrected, unless Department reinspection is required. When the owner fails to comply with the Department's request for closure, the Department will post "No Swimming" signs and the facility may not reopen until a satisfactory Department reinspection occurs.

2. Automatic Controllers.

Automatic chemical feeders may be required for installation on those swimming pools with a record of improper water chemistry.

3. Penalties and Enforcement.

Penalties may be imposed and enforcement procedures shall be carried out by the Department in accordance with 1976 S.C. Code Ann. Sections 44-55-2370 and 44-55-2380.