South Carolina Department of Health and Environmental Control
Division of Ocean and Coastal Resource Management
1362 McMillan Avenue, Suite 400
Charleston, South Carolina 29405

June 5, 2015
Permit Application Public Notice

Clifton W. Baldwin, OCRM-15-176-E

The Department has received an application for a permit for the alteration of a critical area. The application was submitted pursuant to the Coastal Zone Management Act (Act 123) of 1977 South Carolina General Assembly. The application in brief, is described as follows:

LOCATION: **On and adjacent to Bohicket Creek at off of Cherry Point Road, Wadmalaw Island, Charleston County, South Carolina. TMS: 150-00-00-172.**

WORK: **The work as proposed consists of constructing two bridges. Specifically, the applicant seeks to build a 15' x 127' bridge to access island "A" and a 15' x 106' bridge to access island "B". The work as described is for access to islands.**

This public notice is being distributed to all known interested persons and agencies to assist in developing facts on which a decision by the Department can be based. Comments concerning the proposed work must be submitted in writing, setting forth sufficient detail to furnish a clear understanding of the reasons for support or opposition.

Comments regarding this application must be received by the Department on or before **July 5, 2015**. For more information, please contact:
Bill Eiser at **843-953-0237** or via email at **eiserwc@dhec.sc.gov.**

NOTE: Plans depicting the proposed work are available and will be provided upon receipt of a written request or may be viewed on the Department website at **http://www.scdhec.gov/Apps/Environment/PublicNotices.**

THE AREA SHOWN ON THIS PLAT IS A REPRESENTATION OF DEPARTMENT PERMIT AUTHORITY ON THE SUBJECT PROPERTY. CRITICAL AREAS, BY THEIR NATURE, ARE DYNAMIC AND SUBJECT TO CHANGE OVER TIME. BY DELINEATING THE PERMIT AUTHORITY OF THE DEPARTMENT IN NO WAY WAIVES ITS RIGHT TO ASSERT PERMIT JURISDICTION AT ANY TIME IN ANY CRITICAL AREA ON THE SUBJECT PROPERTY, WHETHER SHOWN HEREON OR NOT

William C. Eiser   5/7/2014
SIGNATURE   DATE

THE CRITICAL LINE SHOWN ON THIS PLAT IS VALID FOR FIVE YEARS FROM THE DATE OF THIS SIGNATURE, SUBJECT TO THE CAUTIONARY LANGUAGE ABOVE

O.C.R.M. STATEMENT

APPROVED FINAL PLAT

SBE 13397   7-2-2014

APPROVALS AND R.M.C. STAMPS

RECORDED

Date 7/3/2014 Time 10:30:34 AM
Book-Page L14 0294 Doc Type Large Plat
Charlie Lybrand, Register, Charleston County, SC

Filed By CHARLESTON COUNTY PLANNING
Location WHISTLING ALLIGATOR WAYS

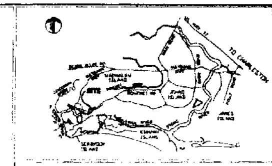

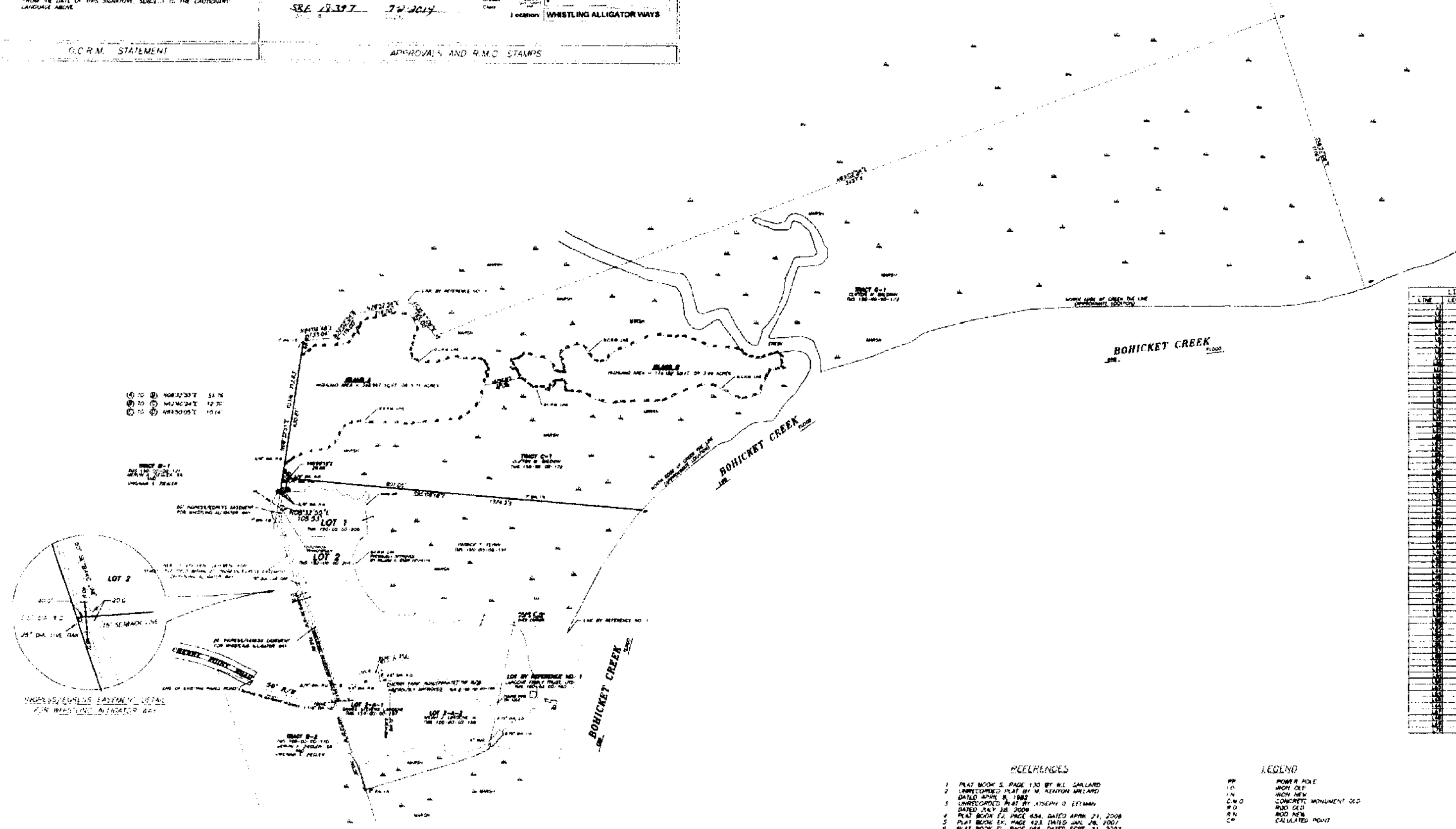

LINE TABLE		
LINE	LENGTH	BEARING
[illegible]	[illegible]	[illegible]

LINE TABLE		
LINE	LENGTH	BEARING
[illegible]	[illegible]	[illegible]

CERTIFICATION

I HEREBY STATE THAT TO THE BEST OF MY KNOWLEDGE, INFORMATION, AND BELIEF, THE SURVEY SHOWN HEREON WAS MADE IN ACCORDANCE WITH THE REQUIREMENTS OF THE MINIMUM STANDARDS MANUAL FOR THE PRACTICE OF LAND SURVEYING IN SOUTH CAROLINA, AND MEETS OR EXCEEDS THE REQUIREMENTS FOR A CLASS A SURVEY AS SPECIFIED THEREIN

REFERENCES

1. PLAT BOOK S, PAGE 130 BY W.L. GAILLARD
2. UNRECORDED PLAT BY M. KENYON MILLARD DATED APRIL 8, 1983
3. UNRECORDED PLAT BY JOSEPH D. EFFMAN DATED JULY 28, 2006
4. PLAT BOOK EJ, PAGE 654, DATED APRIL 21, 2006
5. PLAT BOOK EK, PAGE 423, DATED JAN. 26, 2007
6. PLAT BOOK EL, PAGE 066, DATED SEPT. 21, 2007
7. PLAT BOOK EL, PAGE 383, DATED FEB. 15, 2008
8. PLAT BOOK L08, 0342, DATED JULY 31, 2008
9. PLAT BOOK L09, 0342, DATED JULY 31, 2009
10. PLAT BOOK L10, 0358, DATED DEC. 31, 2010
11. PLAT BOOK L13, 0200, DATED JUNE 7, 2013
12. EASEMENT BOOK 0356, 267, DATED JUNE 7, 2013

LEGEND

PP POWER POLE
I.O. IRON OLD
I.N. IRON NEW
C.M.O. CONCRETE MONUMENT OLD
R.O. ROD OLD
R.N. ROD NEW
CP CALCULATED POINT

NOTES

1. SURVEYED AT THE REQUEST OF CLYTON W. BALDWIN
2. TMS NUMBER 150-00-00-172
3. TOTAL AREA OF PROPERTY IS 75.56± ACRES
4. THE PROPERTY IS LOCATED IN FLOOD ZONES AE 13, 14 AND VE 17, 14 SHOWN ON COMMUNITY PANEL 45019C-0785J DATED NOV. 17, 2004
5. THIS PROPERTY IS ZONED AGR WITH A LOT DENSITY OF 1 DWELLING UNIT PER ACRE
6. THERE IS NO PUBLIC WATER OR SEWER AVAILABLE TO THIS PROPERTY. WATER IS TO BE SUPPLIED BY AN INDIVIDUAL WELL AND SEWER IS TO BE HANDLED BY AN APPROVED SEPTIC SYSTEM

NO.	DATE	REVISION DESCRIPTION

RECEIVED
JUN 10 2014
DHEC - OCRM
CHARLESTON OFFICE

ANDERSON & ASSOCIATES
LAND SURVEYING AND PLANNING, INC.
P.O. BOX 87, JOHNS ISLAND, CHARLESTON COUNTY, SOUTH CAROLINA 29457
PHONE (843)571-0900

SOUTH CAROLINA CERTIFICATE OF AUTHORIZATION
ANDERSON & ASSOCIATES

SCALE 1" = 200'
DATE APRIL 10, 2014
REV. DATE MAY 6, 2014

PLAT OF TRACT
"C-1" SHOWING HIGHLAND
ISLANDS A, B, AND MARSH
AT CHERRY POINT, WADMALAW ISLAND,
CHARLESTON COUNTY, S.C.

OCRM-15-176-C

SURVEY

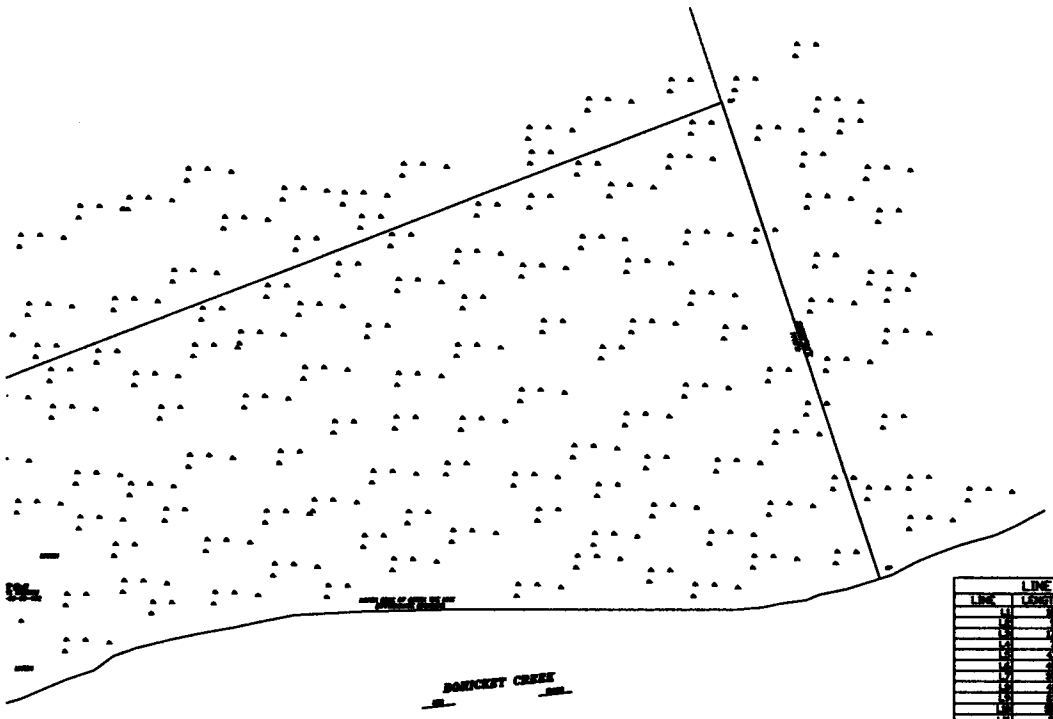

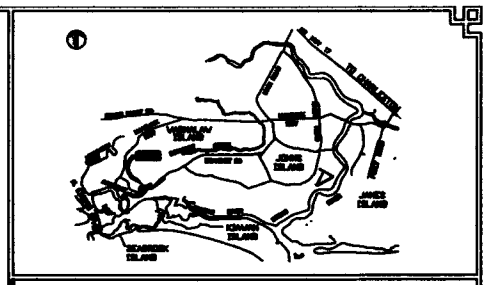

LOCATION MAP NO SCALE

LINE TABLE		
LINE	LENGTH	BEARING
L1	[illegible]	[illegible]
L2	[illegible]	[illegible]
L3	[illegible]	[illegible]
L4	[illegible]	[illegible]
L5	[illegible]	[illegible]

THE AREA SHOWN ON THIS PLAT IS A REPRESENTATION OF DEPARTMENT PERMIT AUTHORITY ON THE SUBJECT PROPERTY. CRITICAL AREAS, BY THEIR NATURE, ARE DYNAMIC AND SUBJECT TO CHANGE OVER TIME. BY DELINEATING THE PERMIT AUTHORITY OF THE DEPARTMENT IN NO WAY WAIVES ITS RIGHT TO ASSERT PERMIT JURISDICTION AT ANY TIME IN ANY CRITICAL AREA ON THE SUBJECT PROPERTY, WHETHER SHOWN, HEREON OR NOT.

SIGNATURE DATE

THE CRITICAL LINE SHOWN ON THIS PLAT IS VALID FOR FIVE YEARS FROM THE DATE OF THIS SIGNATURE, SUBJECT TO THE CAUTIONARY LANGUAGE ABOVE.

O.C.R.M. STATEMENT

APPROVALS AND R.M.C. STAMPS

MAG.

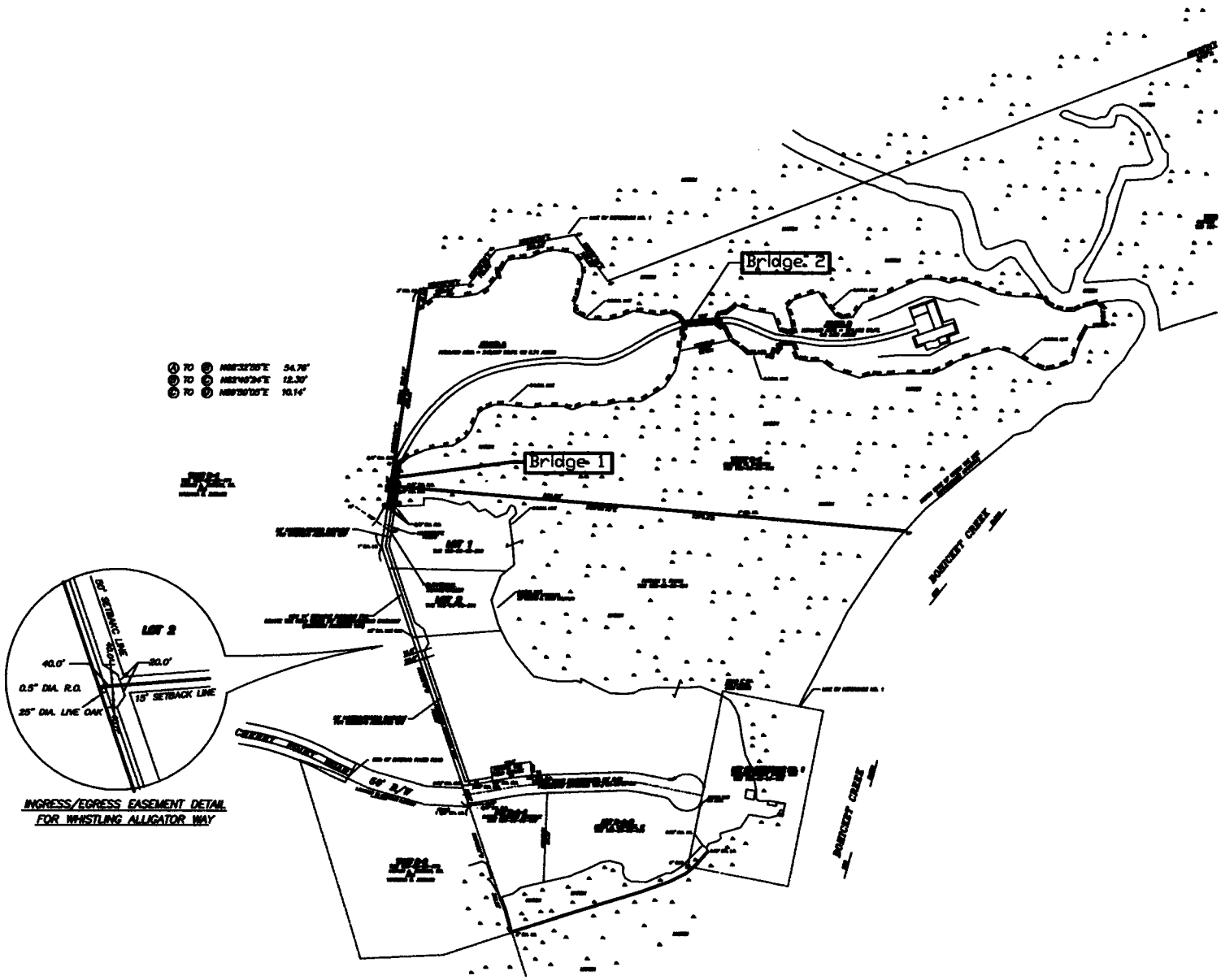

INGRESS/EGRESS EASEMENT DETAIL FOR WHISTLING ALLIGATOR WAY

CERTIFICATION

I HEREBY STATE THAT TO THE BEST OF MY KNOWLEDGE INFORMATION, AND BELIEF THE SURVEY SHOWN HEREON WAS MADE IN ACCORDANCE WITH THE REQUIREMENTS OF THE MINIMUM STANDARDS MANUAL FOR THE PRACTICE OF LAND SURVEYING IN SOUTH CAROLINA, AND MEETS OR EXCEEDS THE REQUIREMENTS FOR A CLASS A SURVEY AS SPECIFIED HEREIN.

OCRM-15-176-C

NO.	DATE	REVISION DESCRIPTION

ANDERSON & ASSOCIATES
LAND SURVEYING AND PLANNING, INC.
P.O. BOX 87, JOHNS ISLAND, CHARLESTON COUNTY, SOUTH CAROLINA 29457
PHONE (843)571-0900

SURVEY 2 OF 2 (LEFT SIDE)

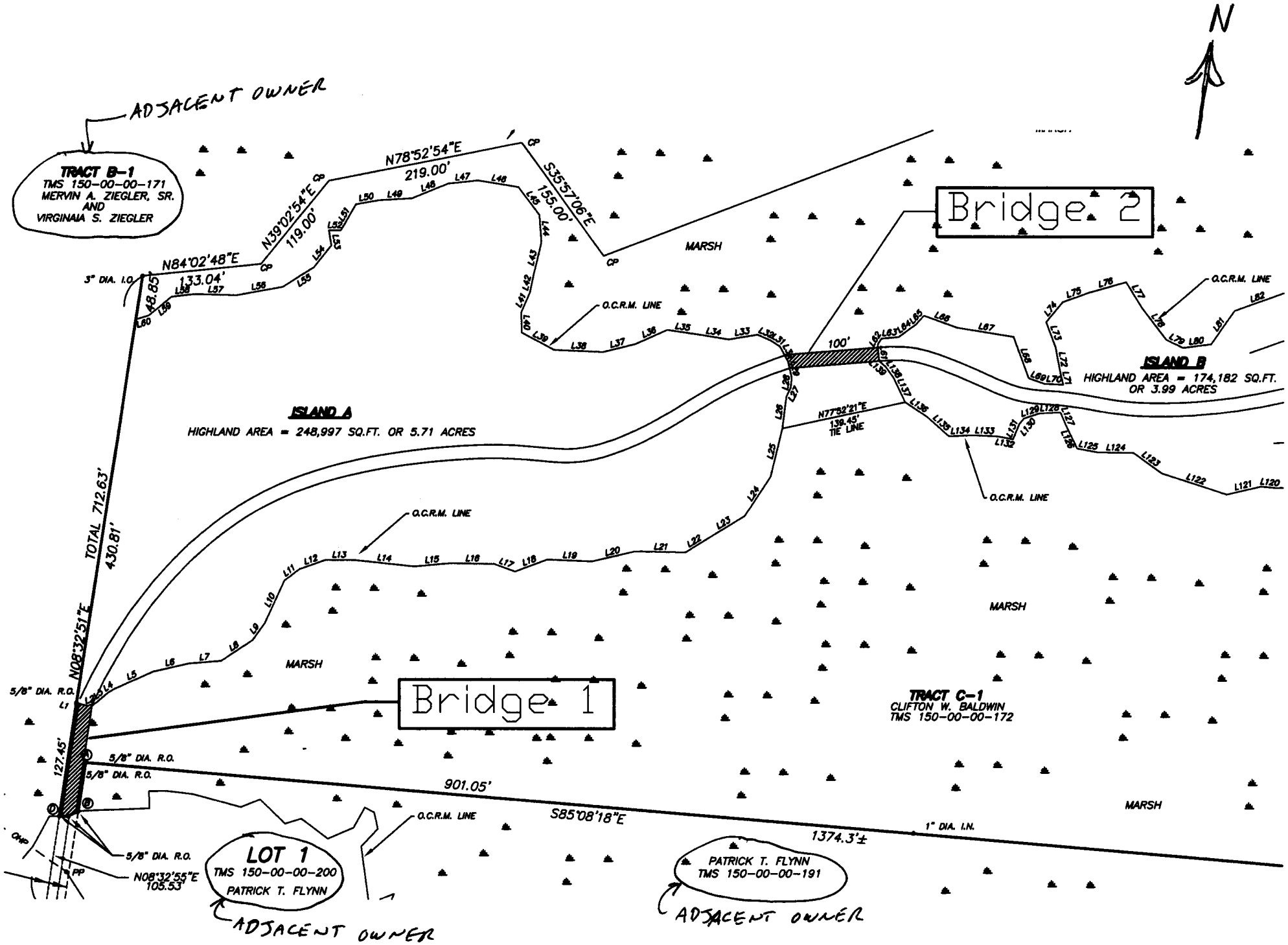

OCRM-15-176-e

ENLARGED SURVEY

NOTE:

GENERAL CONFIGURATION OF BRIDGE SHOWN. COORDINATE EXACT CONFIGURATION AND DETAILS WITH OWNER AND TINDALL DESIGN AND DRAWINGS.

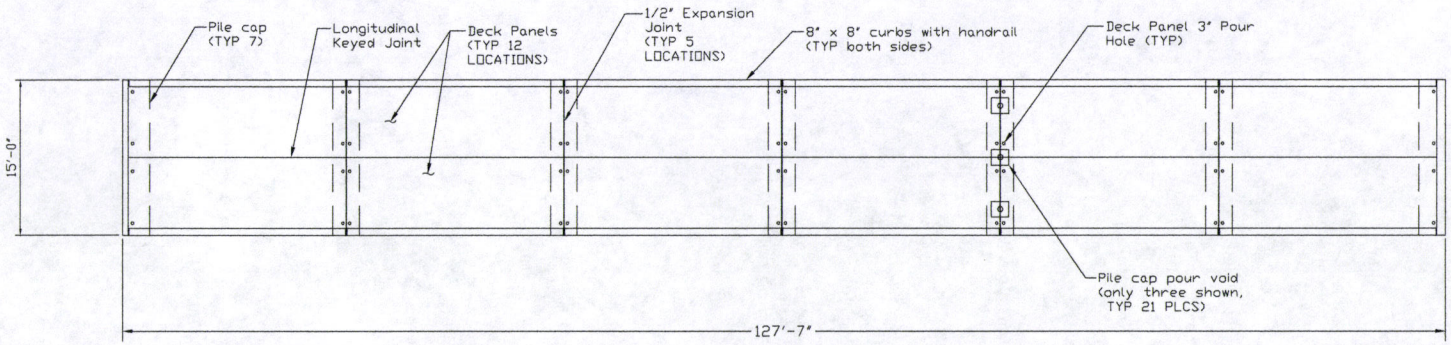

BRIDGE 1 PLAN
¾" = 1'-0"

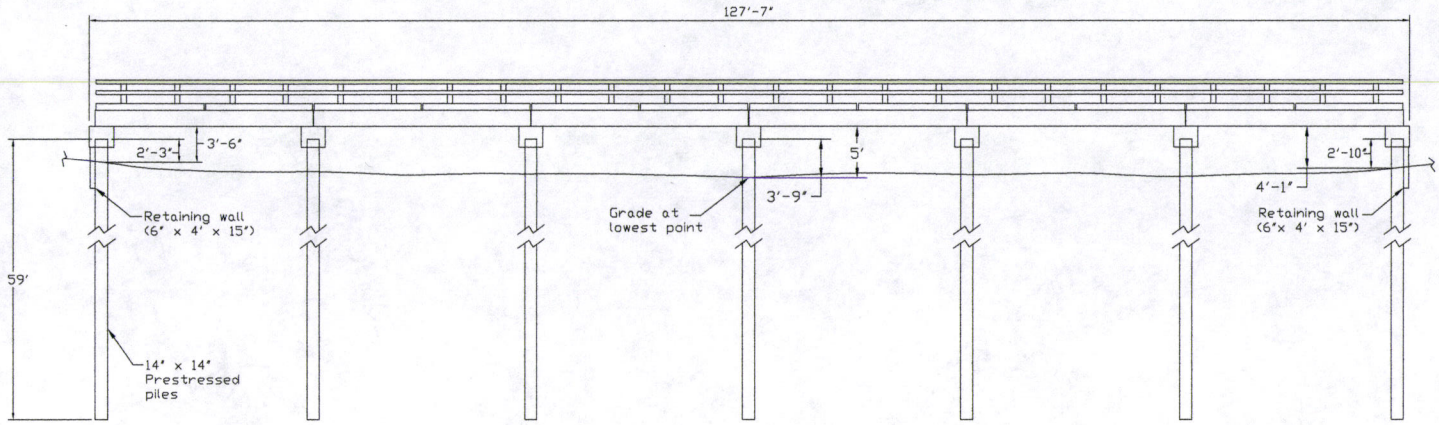

BRIDGE 1 ELEVATION
¾" = 1'-0"

OCRM-15-176-C

4SE
STRUCTURAL ENGINEERS

7 RADCLIFFE STREET
SUITE 201
CHARLESTON, SC 29403

PH: 843-722-1392
FAX: 843-722-2211
www.4se4ts.com

SEAL

SOUTH CAROLINA PROFESSIONAL ENGINEER No. 7976 5.15.2015 DEAN WILLIAM USSERY

SEAL

SOUTH CAROLINA 4SE, INC. No. C02676 CERTIFICATE OF AUTHORIZATION

CONSULTANTS

NO.	DATE	REVISION

PROJECT

CHERRY POINT BRIDGES

SHEET TITLE

BRIDGE 1 PLAN AND ELEVATION

PROJECT MGR.:	DWU
DESIGNED BY:	DWU
DRAWN BY:	TGM
CHECKED BY:	DWU
ISSUE DATE:	5-13-2015
PROJECT NO.:	15-022

SHEET

S4

NOTE:

GENERAL CONFIGURATION OF BRIDGE SHOWN. COORDINATE EXACT CONFIGURATION AND DETAILS WITH OWNER AND TINDALL DESIGN AND DRAWINGS.

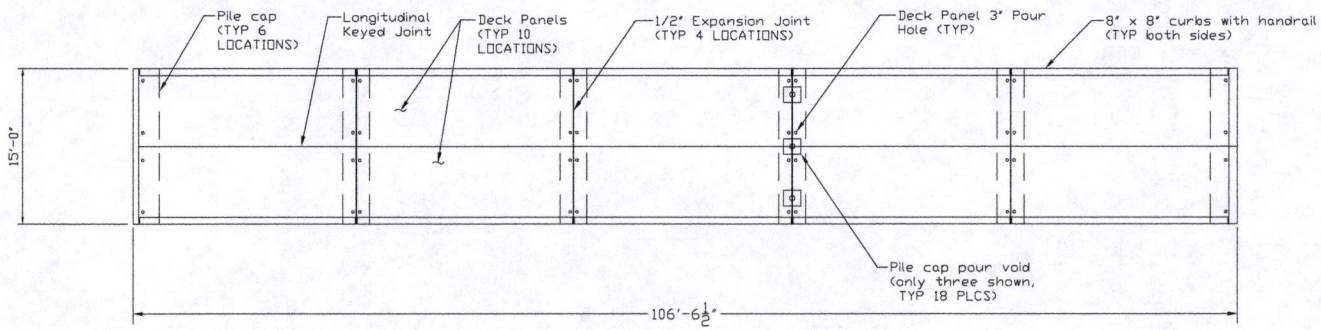

BRIDGE 2 PLAN
¾" = 1'-0"

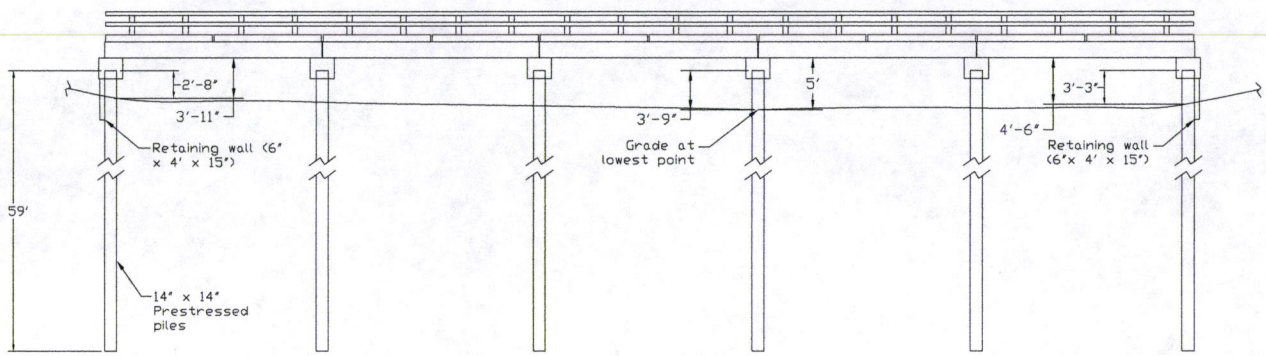

BRIDGE 2 ELEVATION
¾" = 1'-0"

OCRM-15-176-C

4SE STRUCTURAL ENGINEERS

7 RADCLIFFE STREET
SUITE 301
CHARLESTON, SC 29403

PH: 843-722-1992
FAX: 843-722-2211
www.4sefrc.com

SEAL

SOUTH CAROLINA PROFESSIONAL ENGINEER No. 7976 5.15.2015 DEAN WILLIAM UBBEN

SEAL

SOUTH CAROLINA 4SE, INC. No. C02578 CERTIFICATE OF AUTHORIZATION

CONSULTANTS

NO.	DATE	REVISION

PROJECT

CHERRY POINT BRIDGES

SHEET TITLE

BRIDGE 2 PLAN AND ELEVATION

PROJECT MGR.:	DWU
DESIGNED BY:	DWU
DRAWN BY:	TGM
CHECKED BY:	DWU
ISSUE DATE:	5-13-2015
PROJECT NO.:	15-022

SHEET

S5

NOTE:

DIMENSIONS TO BE CONFIRMED WITH DRAWINGS OF BRIDGE BY TINDALL.

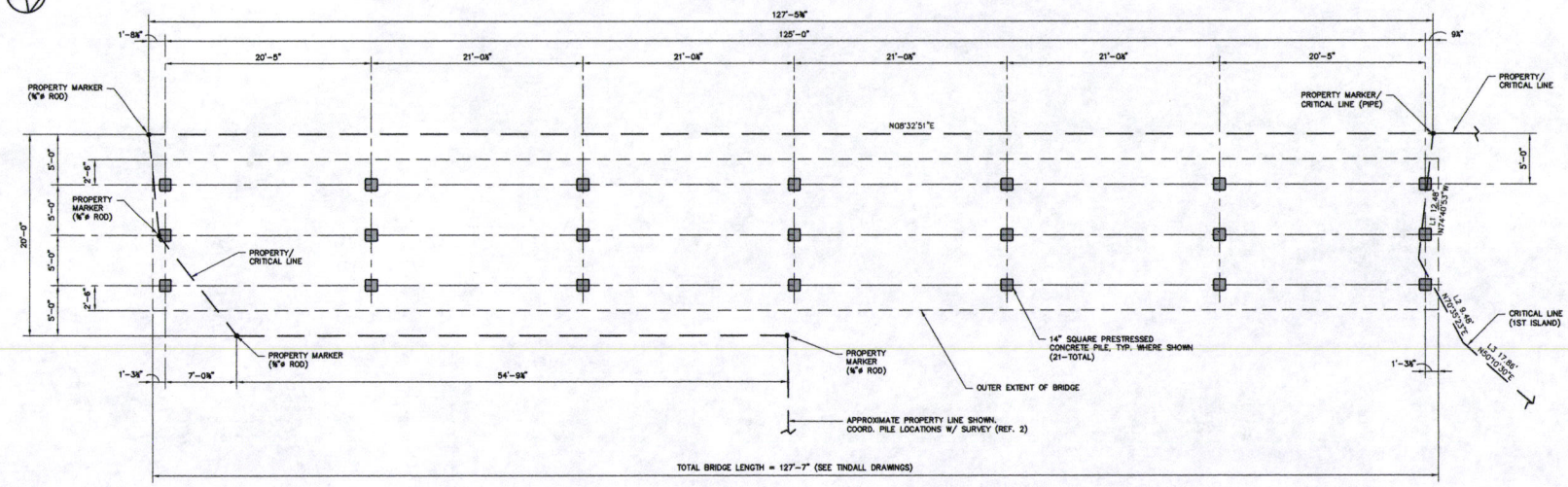

PILE PLAN – BRIDGE 1

⅜" = 1'-0"

OCRM-15-176-e

4SE STRUCTURAL ENGINEERS

7 RADCLIFFE STREET
SUITE 301
CHARLESTON, SC 29403

PH: 843-722-1992
FAX: 843-722-1211
www.4seinc.com

SEAL

SOUTH CAROLINA PROFESSIONAL ENGINEER No. 7976 5.15.2015 DEAN WILLIAM USSERY

SEAL

SOUTH CAROLINA 4SE, INC. No. C02676 CERTIFICATE OF AUTHORIZATION

CONSULTANTS

NO.	DATE	REVISION

PROJECT

CHERRY POINT BRIDGES

SHEET TITLE

PILE PLAN BRIDGE 1

PROJECT MGR.:	DWU
DESIGNED BY:	DWU
DRAWN BY:	TGM
CHECKED BY:	DWU
ISSUE DATE:	5-13-2015
PROJECT NO.:	15-022

SHEET

S1

NOTE:

DIMENSIONS TO BE CONFIRMED WITH DRAWINGS OF BRIDGE BY TINDALL.

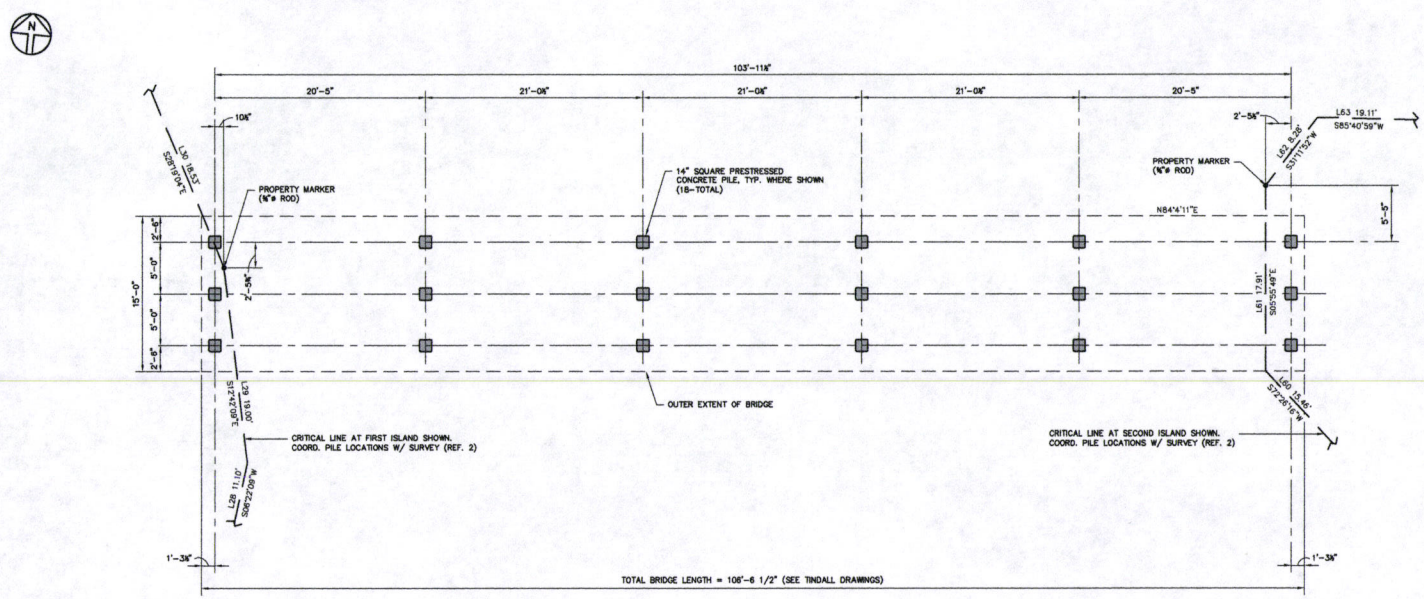

PILE PLAN – BRIDGE 2

¼" = 1'-0"

OCRM-15-176-C

4SE STRUCTURAL ENGINEERS

7 RADCLIFFE STREET
SUITE 300
CHARLESTON, SC 29403

PH: 843-722-1992
FAX: 843-722-1211
www.4setrc.com

SEAL

SOUTH CAROLINA PROFESSIONAL ENGINEER No. 7976 5.15.2015 DEAN WILLIAM UBBEN

SEAL

SOUTH CAROLINA 4SE, INC. No. C02676 CERTIFICATE OF AUTHORIZATION

CONSULTANTS

NO.	DATE	REVISION

PROJECT

CHERRY POINT BRIDGES

SHEET TITLE

PILE PLAN BRIDGE 2

PROJECT MGR.:	DWU
DESIGNED BY:	DWU
DRAWN BY:	TGM
CHECKED BY:	DWU
ISSUE DATE:	5-13-2015
PROJECT NO.:	15-022

SHEET

S2