South Carolina Department of Health and Environmental Control
Office of Ocean and Coastal Resource Management
104 Parker Drive
Beaufort, South Carolina 29906

June 20, 2013
Permit Application Public Notice

Horizon Residential Loan Servicing, LLC, OCRM-13-156-W

The Department has received an application for a permit for the alteration of a critical area. The application was submitted pursuant to the Coastal Zone Management Act (Act 123) of 1977 South Carolina General Assembly. The application in brief, is described as follows:

LOCATION: **On and adjacent to Sawmill Creek at 5 Carroll Dr., Sawmill Creek Plantation, Bluffton, Beaufort County, South Carolina. TMS: R600 032 000 0027 0000.**

WORK: **The work as proposed consists of constructing a new dock. Specifically, the applicant seeks to remove the existing structure and construct a covered 16' x 16' pierhead adjacent to the OCRM critical area line. Channelward of the pierhead, a 4' x 32' ramp will access a 10' x 30' floating dock and 16' x 16', four-pile boatlift. The work as described is for private, recreational use.**

This public notice is being distributed to all known interested persons and agencies to assist in developing facts on which a decision by the Department can be based. Comments concerning the proposed work must be submitted in writing, setting forth sufficient detail to furnish a clear understanding of the reasons for support or opposition.

Comments regarding this application must be received by the Department on or before **July 5, 2013**. For more information, please contact **Paul Wojoski** at **843-846-9400** or via email at **wojoskpa@dhec.sc.gov.**

NOTE: Plans depicting the proposed work are available and will be provided upon receipt of a written request or may be viewed on the Department website at **www.scdhec.gov/environment/ocrm/public_notice.htm.**

LEGEND

CMF ■	CONCRETE MONUMENT FOUND
P	PINE
G	SWEET GUM
LO	LIVE OAK
PA	PALMETTO
CED	CEDAR
M.L.W.	MEAN LOW WATER LINE
M.H.W.	MEAN HIGH WATER LINE
OCRM	OCEAN & COASTAL RESOURCE MANAGEMENT LINE

REFERENCE

A PLAT OF SAW MILL CREEK PLANTATION, PHASE A.
DATE: 12-22-76
BY: FORREST BAUGHMAN, R.L.S.

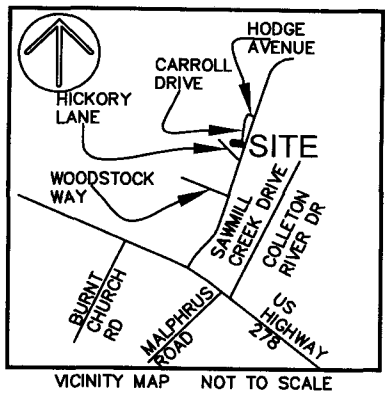

VICINITY MAP NOT TO SCALE

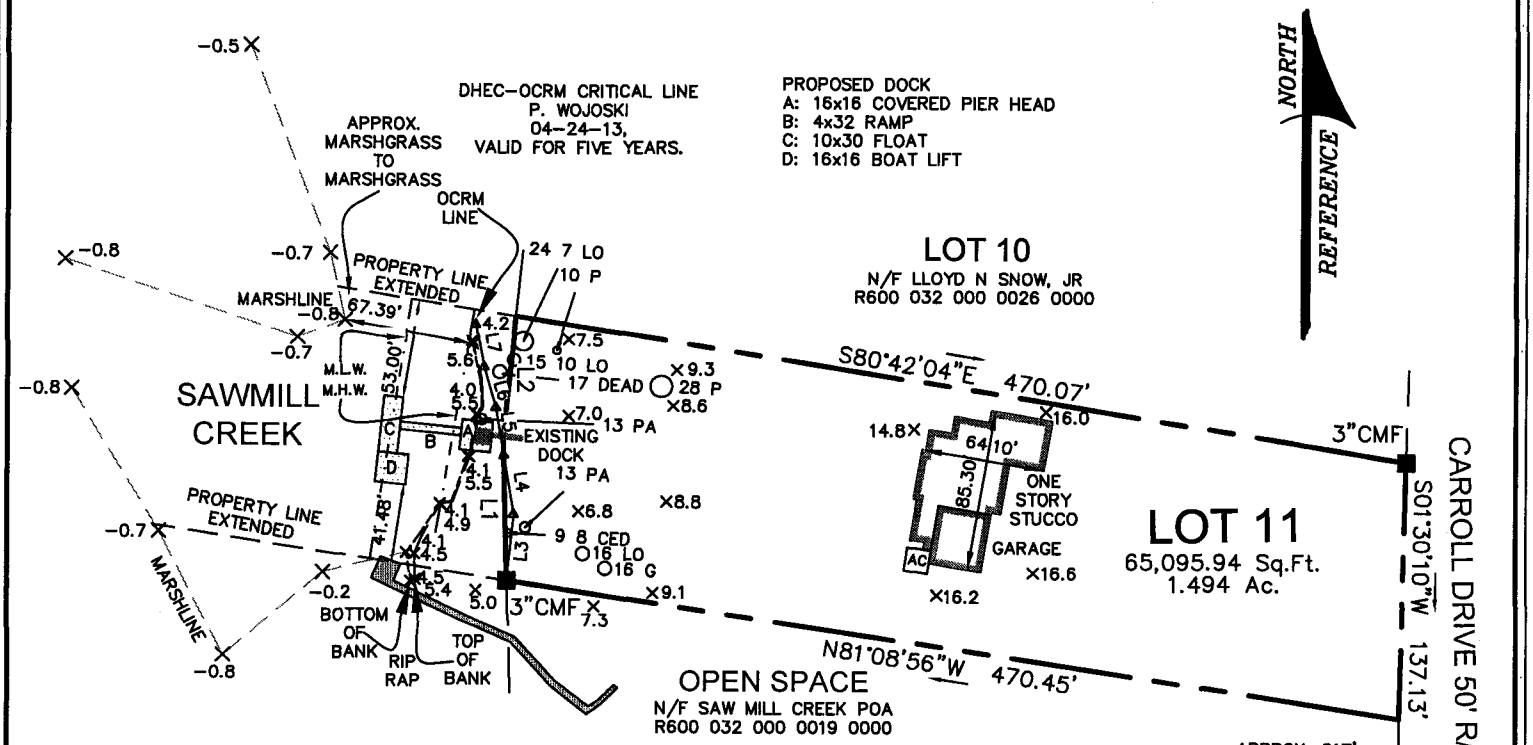

LINE TABLE		
LABEL	BEARING	DISTANCE
L1	N01°26'50"W	75.99'
L2	N05°42'40"E	65.01'
L3	N05°56'23"E	35.02'
L4	N09°32'13"W	32.28'
L5	N09°24'44"W	25.02'
L6	N15°59'55"W	22.55'
L7	N10°19'58"W	23.74'

Horizon Residential loan servicing, llc
OCRM-13-156-W

100 50 0 100 200
GRAPHIC SCALE

A SURVEY OF A PROPOSED DOCK
LOT 11 SAW MILL CREEK PLANTATION
TAX PARCEL No.
R600 032 000 0027 0000
BLUFFTON
BEAUFORT COUNTY, SOUTH CAROLINA

FIELD CHECK: WHG
DATE: 4/16/13
SCALE: 1"=100'
PROJECT No.: 13086D
FILE: 13086_D1.DWG

SOUTH CAROLINA ATLAS SURVEYING INC. No. C04285 CERTIFICATE OF AUTHORIZATION

SOUTH CAROLINA PROFESSIONAL LAND SURVEYOR No. 22744 WILLIAM H. GRAY, JR.

ATLAS SURVEYING INC.
49 BROWN'S COVE ROAD, SUITE #5
RIDGELAND, SC 29936
PHONE: (843) 645-9277
FAX: (843) 645-9267
E-MAIL: BGRAY@ATLASSURVEYING.COM

5/22/13
WILLIAM H. GRAY, JR.
S.C.R.L.S. No.: 22744
NOT VALID UNLESS CRIMPED WITH SEAL

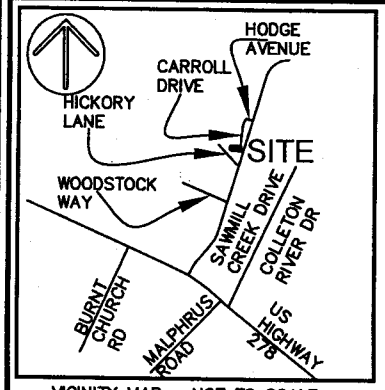

VICINITY MAP NOT TO SCALE

PROPOSED DOCK
A: 16x16 COVERED PIER HEAD
B: 4x32 RAMP
C: 10x30 FLOAT
D: 16x16 BOAT LIFT

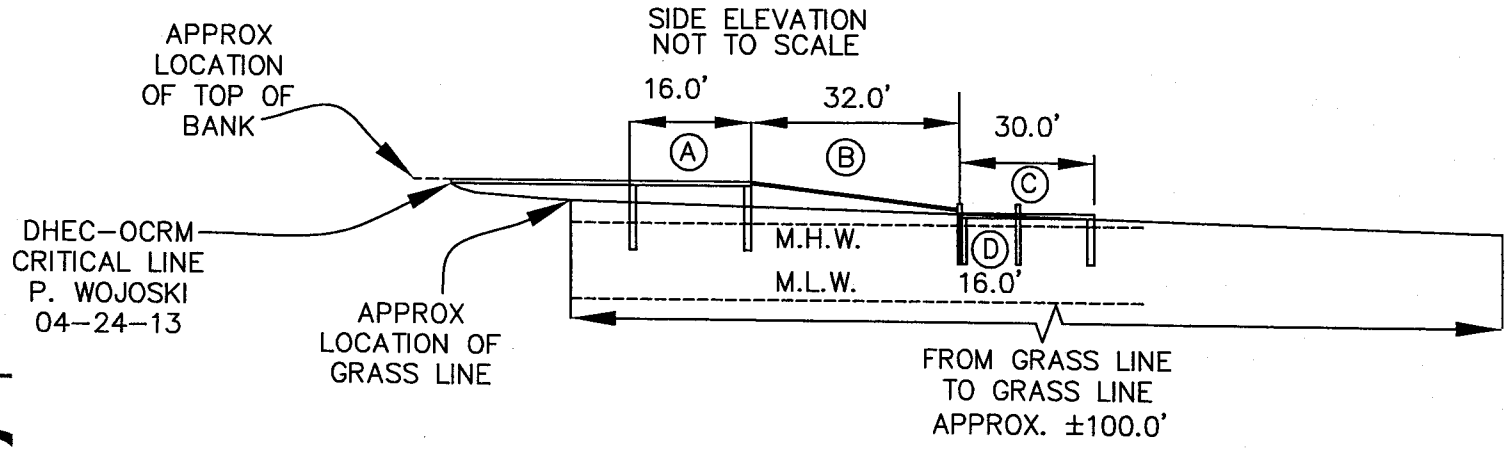

ATLAS
SURVEYING & MAPPING, INC
49 BROWN'S COVE ROAD, SUITE #5
RIDGELAND, SC 29936
PHONE: (843) 645-9277
FAX: (843) 645-9267
E-MAIL: BGRAY@ATLASSURVEYING.COM

SOUTH CAROLINA ATLAS SURVEYING INC. No. C04285 CERTIFICATE OF AUTHORIZATION

SOUTH CAROLINA PROFESSIONAL LAND SURVEYOR No. 22744 WILLIAM H. GRAY, JR.

5/22/13

WILLIAM H. GRAY, JR.
S.C.R.L.S. No.: 22744
NOT VALID UNLESS CRIMPED WITH SEAL

Horizon Residential
LOAN Servicing, llc
OCRM-13-156-W

A SIDE VIEW OF A PROPOSED DOCK
5 CARROL DRIVE, LOT 11
SAWMILL CREEK

TAX MAP No. R600 032 000 0027 0000
BLUFFTON
BEAUFORT COUNTY, SOUTH CAROLINA

FIELD CHECK:	WHG
DATE:	04-16-13
SCALE:	NTS
PROJECT No.:	13086D
FILE:	10018 D1.DWG

REFERENCE

A PLAT OF SAW MILL CREEK PLANTATION, PHASE A.
DATE: 12-22-76
BY: FORREST BAUGHMAN, R.L.S.

NOTES

1. THIS LOT LIES IN FLOOD ZONE A8 WITH A MINIMUM ELEVATION OF 14', FIRM PANEL 0115-D, COMMUNITY 450025.

Google

Address **5 Carroll Dr**
Bluffton, SC 29910

OCRM-13-156-W

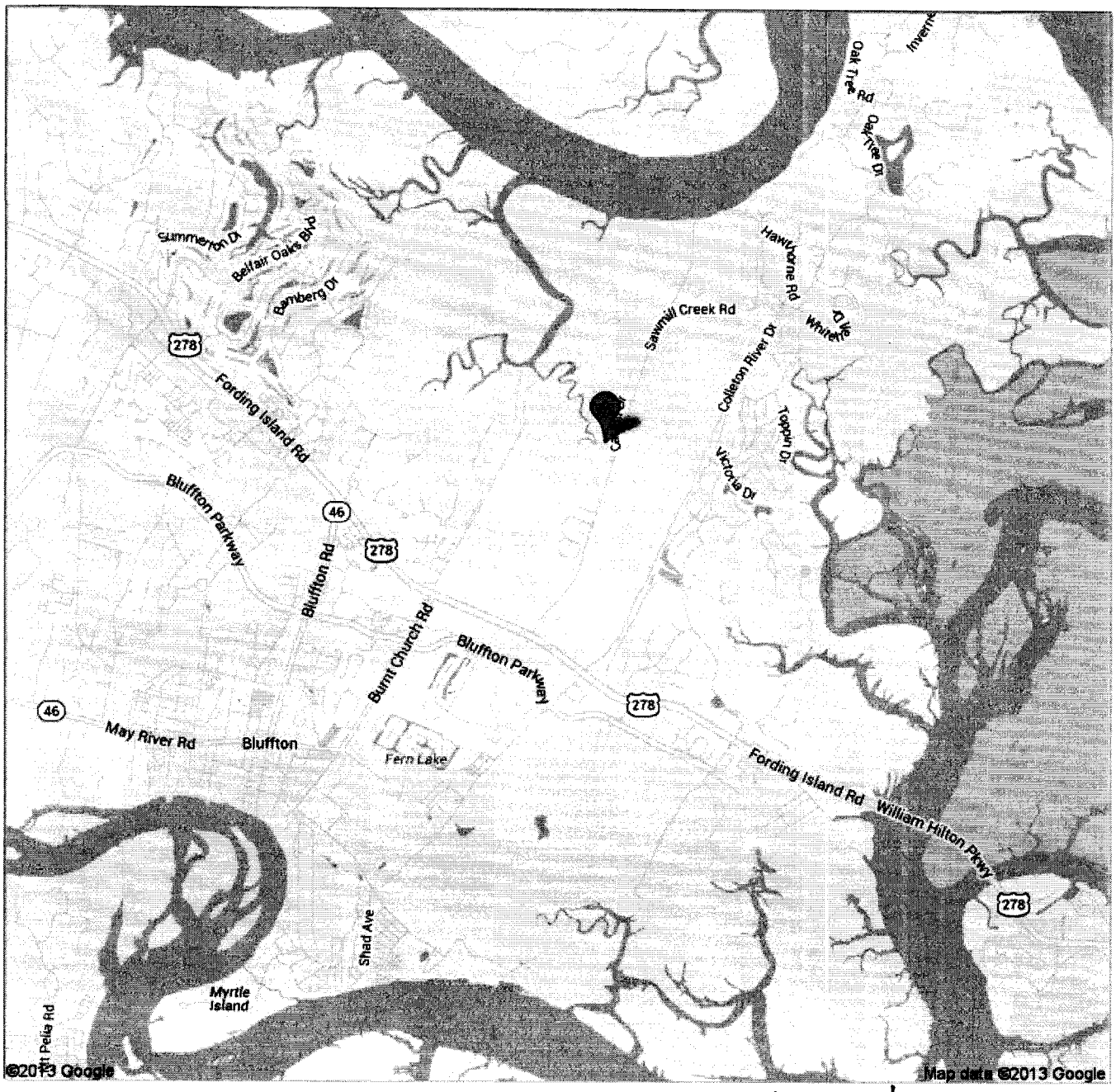

OCRM-13-156-W
5 Carroll Drive
SAWmill Creek
Plantation