South Carolina Department of Health and Environmental Control
Office of Ocean and Coastal Resource Management
1362 McMillan Avenue, Suite 400
Charleston, South Carolina 29405

November 4, 2013
Permit Application Public Notice
Charleston County, OCRM-13-301-B

The Department has received an application for a permit for the alteration of a critical area. The application was submitted pursuant to the Coastal Zone Management Act (Act 123) of 1977 South Carolina General Assembly. The application in brief, is described as follows:

LOCATION: **On and adjacent to Atlantic Intracoastal Waterway at Osceola Ave and Station 9 1/2, Sullivans Island, Charleston County, South Carolina.**

WORK: **The work as proposed consists of making drainage improvements. Specifically, the applicant seeks to replace the existing outfall pipe with 38' of 18" RCP with a headwall at the end of the new pipe. The new headwall will contain a flap gate to prevent back flow during high tide events. The new pipe will be installed at a slightly higher elevation to prevent future blockage from sediment and debris and will minimize maintenance. The applicant also seeks to clear the channel in the marsh from accumulated debris and restore original contours for approximately 50'. The work as described is for drainage improvements.**

This public notice is being distributed to all known interested persons and agencies to assist in developing facts on which a decision by the Department can be based. Comments concerning the proposed work must be submitted in writing, setting forth sufficient detail to furnish a clear understanding of the reasons for support or opposition.

Comments regarding this application must be received by the Department on or before **December 4, 2013**. For more information, please contact:
Steve Brooks at **843-953-0235** or via email at **brookss@dhec.sc.gov.**

NOTE: Plans depicting the proposed work are available and will be provided upon receipt of a written request or may be viewed on the Department website at **www.scdhec.gov/environment/ocrm/public_notice.htm.**

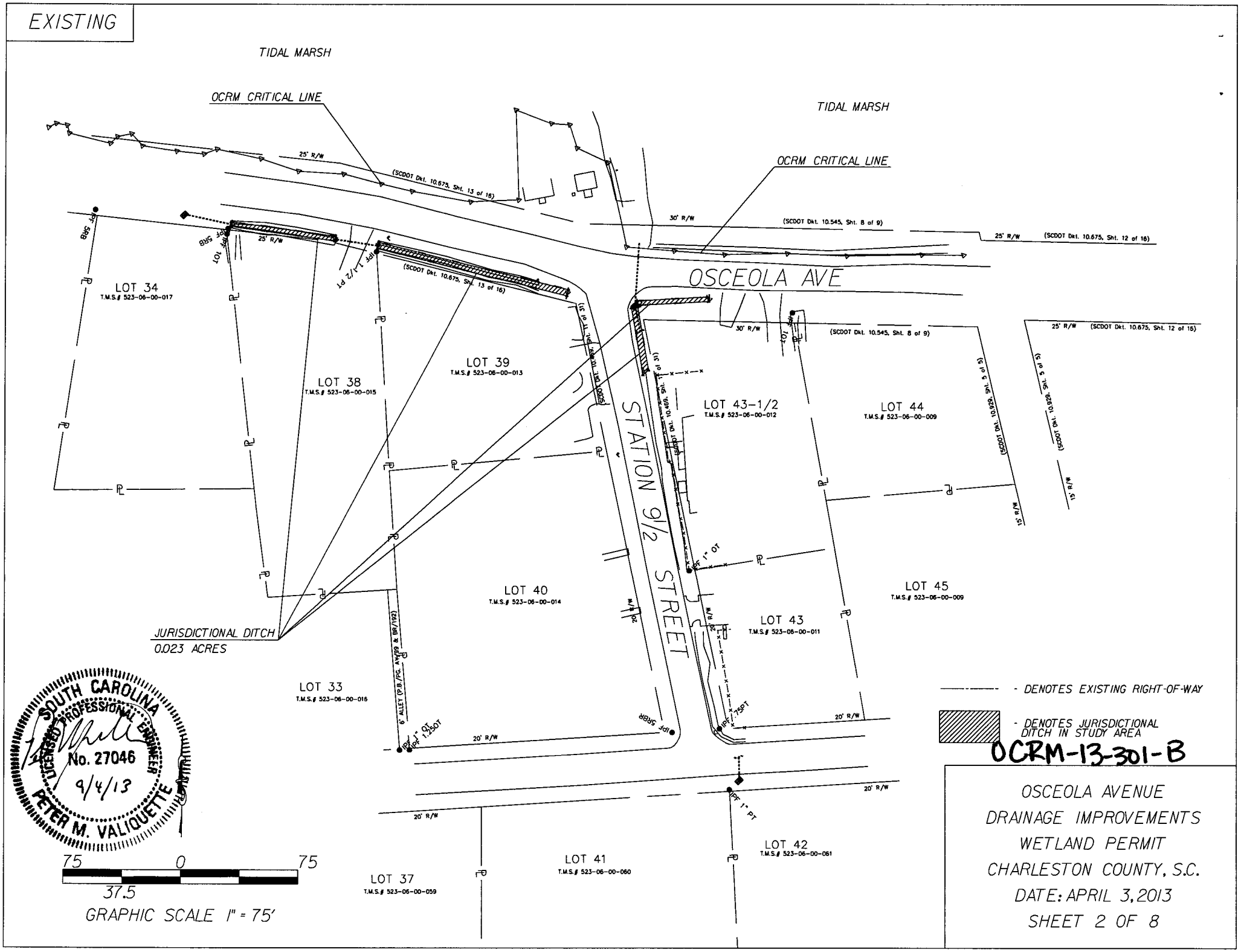
EXISTING
TIDAL MARSH
OCRM CRITICAL LINE
TIDAL MARSH
OCRM CRITICAL LINE
25' R/W
(SCDOT Dkt. 10.675, Sht. 13 of 16)
30' R/W
(SCDOT Dkt. 10.545, Sht. 8 of 9)
25' R/W
(SCDOT Dkt. 10.675, Sht. 12 of 16)
OSCEOLA AVE
LOT 34
T.M.S.# 523-06-00-017
LOT 38
T.M.S.# 523-06-00-015
LOT 39
T.M.S.# 523-06-00-013
LOT 43-1/2
T.M.S.# 523-06-00-012
LOT 44
T.M.S.# 523-06-00-009
STATION 9/2 STREET
LOT 40
T.M.S.# 523-06-00-014
LOT 45
T.M.S.# 523-06-00-009
LOT 43
T.M.S.# 523-06-00-011
JURISDICTIONAL DITCH
0.023 ACRES
LOT 33
T.M.S.# 523-06-00-016
20' R/W
LOT 42
T.M.S.# 523-06-00-061
LOT 41
T.M.S.# 523-06-00-060
LOT 37
T.M.S.# 523-06-00-059
- DENOTES EXISTING RIGHT-OF-WAY
- DENOTES JURISDICTIONAL DITCH IN STUDY AREA
OCRM-13-301-B
SOUTH CAROLINA
LICENSED PROFESSIONAL ENGINEER
No. 27046
9/4/13
PETER M. VALIQUETTE
75 0 75
37.5
GRAPHIC SCALE 1" = 75'
OSCEOLA AVENUE
DRAINAGE IMPROVEMENTS
WETLAND PERMIT
CHARLESTON COUNTY, S.C.
DATE: APRIL 3, 2013
SHEET 2 OF 8

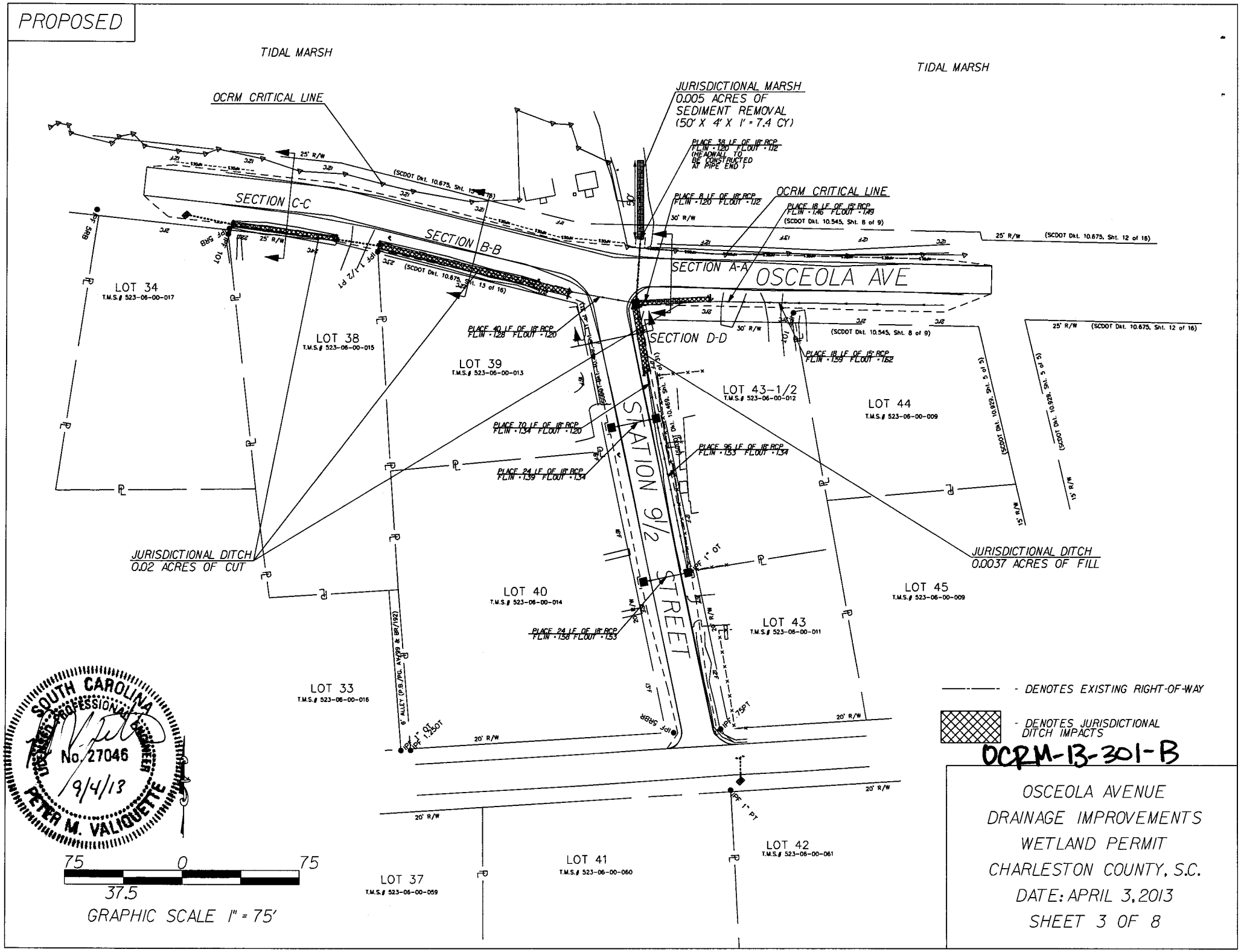
PROPOSED
TIDAL MARSH
TIDAL MARSH
OCRM CRITICAL LINE
JURISDICTIONAL MARSH
0.005 ACRES OF
SEDIMENT REMOVAL
(50' X 4' X 1' = 7.4 CY)
PLACE 38 LF OF 18" RCP
FLIN = 1.20 FLOUT = 1.12
(HEADWALL TO
BE CONSTRUCTED
AT PIPE END)
PLACE 8 LF OF 18" RCP
FLIN = 1.20 FLOUT = 1.12
OCRM CRITICAL LINE
PLACE 18 LF OF 15" RCP
FLIN = 1.46 FLOUT = 1.49
(SCDOT Dkt. 10.545, Sht. 8 of 9)
SECTION C-C
SECTION B-B
SECTION A-A
OSCEOLA AVE
SECTION D-D
25' R/W
30' R/W
(SCDOT Dkt. 10.675, Sht. 12 of 16)
(SCDOT Dkt. 10.675, Sht. 13 of 16)
(SCDOT Dkt. 10.545, Sht. 8 of 9)
LOT 34
T.M.S.# 523-06-00-017
LOT 38
T.M.S.# 523-06-00-015
LOT 39
T.M.S.# 523-06-00-013
LOT 43-1/2
T.M.S.# 523-06-00-012
LOT 44
T.M.S.# 523-06-00-009
PLACE 40 LF OF 18" RCP
FLIN = 1.28 FLOUT = 1.20
PLACE 18 LF OF 15" RCP
FLIN = 1.59 FLOUT = 1.62
PLACE 70 LF OF 18" RCP
FLIN = 1.34 FLOUT = 1.20
PLACE 96 LF OF 18" RCP
FLIN = 1.53 FLOUT = 1.34
PLACE 24 LF OF 18" RCP
FLIN = 1.39 FLOUT = 1.34
STATION 9/2 STREET
JURISDICTIONAL DITCH
0.02 ACRES OF CUT
JURISDICTIONAL DITCH
0.0037 ACRES OF FILL
LOT 40
T.M.S.# 523-06-00-014
LOT 45
T.M.S.# 523-06-00-009
LOT 43
T.M.S.# 523-06-00-011
PLACE 24 LF OF 18" RCP
FLIN = 1.58 FLOUT = 1.53
LOT 33
T.M.S.# 523-06-00-016
6' ALLEY (P.B./PG. AV/99 & BR/192)
20' R/W
LOT 37
T.M.S.# 523-06-00-059
LOT 41
T.M.S.# 523-06-00-060
LOT 42
T.M.S.# 523-06-00-061
- DENOTES EXISTING RIGHT-OF-WAY
- DENOTES JURISDICTIONAL DITCH IMPACTS
OCRM-13-301-B
SOUTH CAROLINA
LICENSED PROFESSIONAL ENGINEER
No. 27046
9/4/13
PETER M. VALIQUETTE
75 0 75
37.5
GRAPHIC SCALE 1" = 75'
OSCEOLA AVENUE
DRAINAGE IMPROVEMENTS
WETLAND PERMIT
CHARLESTON COUNTY, S.C.
DATE: APRIL 3, 2013
SHEET 3 OF 8

SECTION A-A

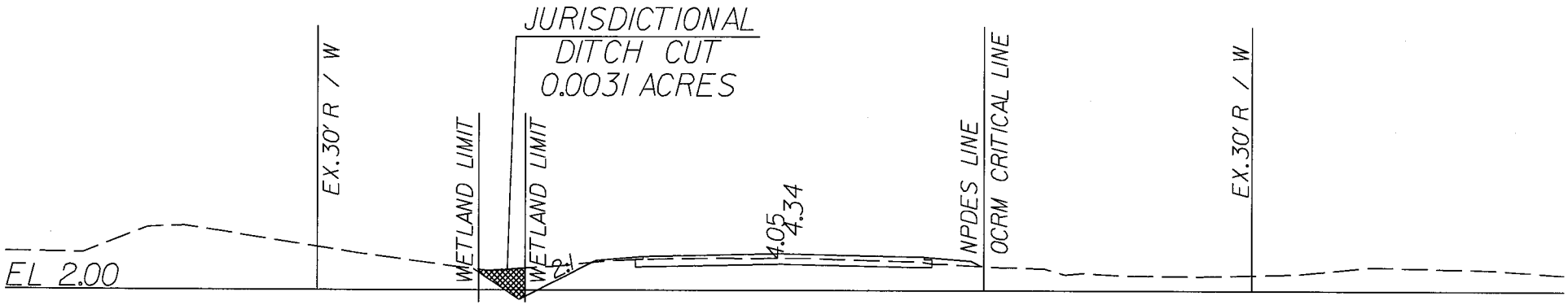

NOTE:
OCRM CRITICAL AREA
EXTENDS BEYOND
PROJECT LIMITS

OCRM-13-301-B

------ EXISTING GRADE
——— FINISHED GRADE

HORIZONTAL SCALE 1" = 10'

OSCEOLA AVENUE
DRAINAGE IMPROVEMENTS
WETLAND PERMIT
CHARLESTON COUNTY, S.C.
DATE: APRIL 3, 2013
SHEET 4 OF 8

SOUTH CAROLINA
LICENSED PROFESSIONAL ENGINEER
No. 27046
9/4/13
PETER M. VALIQUETTE

SECTION B-B

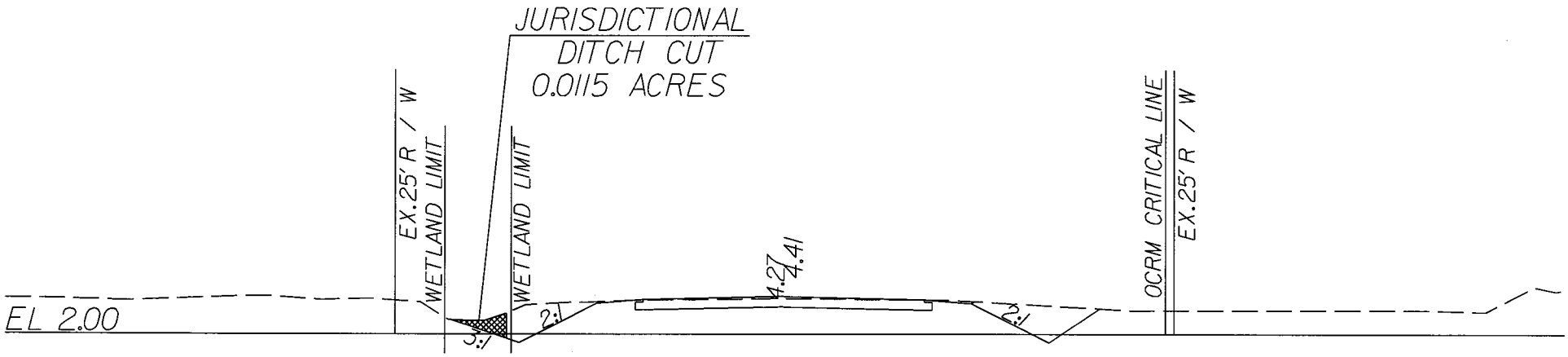

OCRM-13-301-B

NOTE:
OCRM CRITICAL AREA EXTENDS BEYOND PROJECT LIMITS

SOUTH CAROLINA
PROFESSIONAL ENGINEER
LICENSED
No. 27046
9/4/13
PETER M. VALIQUETTE

------ EXISTING GRADE
——— FINISHED GRADE

HORIZONTAL SCALE 1" = 10'

OSCEOLA AVENUE
DRAINAGE IMPROVEMENTS
WETLAND PERMIT
CHARLESTON COUNTY, S.C.
DATE: APRIL 3, 2013
SHEET 5 OF 8

SECTION C-C

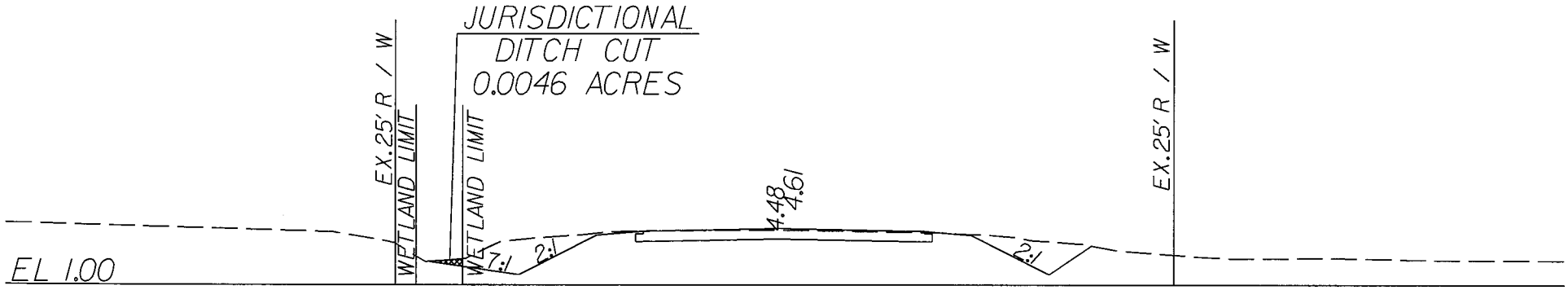

OCRM-13-301-B

SOUTH CAROLINA
PROFESSIONAL ENGINEER
No. 27046
9/4/13
PETER M. VALIQUETTE

------ EXISTING GRADE
——— FINISHED GRADE

HORIZONTAL SCALE 1" = 10'

OSCEOLA AVENUE
DRAINAGE IMPROVEMENTS
WETLAND PERMIT
CHARLESTON COUNTY, S.C.
DATE: APRIL 3, 2013
SHEET 6 OF 8

SECTION D-D

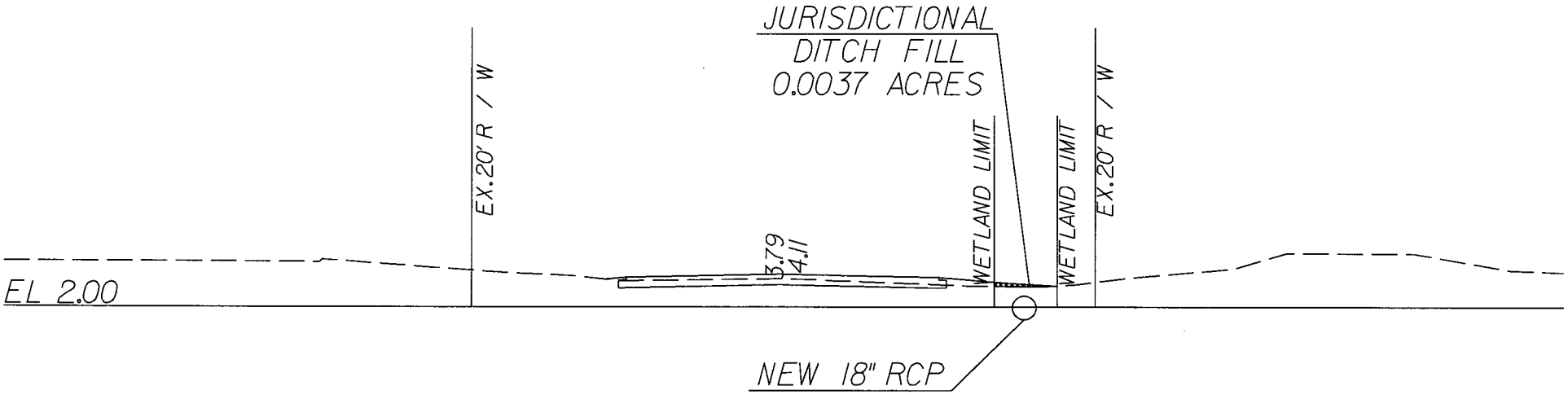

OCRM-13-301-B

SOUTH CAROLINA
LICENSED PROFESSIONAL ENGINEER
No. 27046
9/4/13
PETER M. VALIQUETTE

------ EXISTING GRADE
——— FINISHED GRADE

HORIZONTAL SCALE 1" = 10'

OSCEOLA AVENUE
DRAINAGE IMPROVEMENTS
WETLAND PERMIT
CHARLESTON COUNTY, S.C.
DATE: APRIL 3, 2013
SHEET 7 OF 8

REFERENCES

NATIONAL DOCUMENTS

ASTM A706

SCDOT DOCUMENTS

SECTION 718/701 SCDOT STANDARD SPECIFICATIONS FOR HIGHWAY CONSTRUCTION
QUALIFIED PRODUCT LIS 114

RELATED DRAWINGS & KEYWORDS

PRECONSTRUCTION SUPPORT ENGINEER

SOUTH CAROLINA REGISTERED PROFESSIONAL ENGINEER NO. 8858 EDWIN SYLVESTER EARGLE, III

SIGNATURE

MARCH 3, 2008

DATE

#	DATE	CHK	DESCRIPTION
6			
5			
4			
3			
2			
1			
0	3/2008	DSD	GENERAL REVISIONS

SCDOT

SOUTH CAROLINA DEPARTMENT OF TRANSPORTATION
DESIGN STANDARDS OFFICE
955 PARK STREET
ROOM 405
COLUMBIA, SC 29201

STANDARD DRAWING

END TREATMENT (STRAIGHT HEADWALL FOR CIRCULAR PIPE)

719-605-00

EFFECTIVE LETTING DATE MAY 2008

THIS DRAWING IS NOT TO SCALE

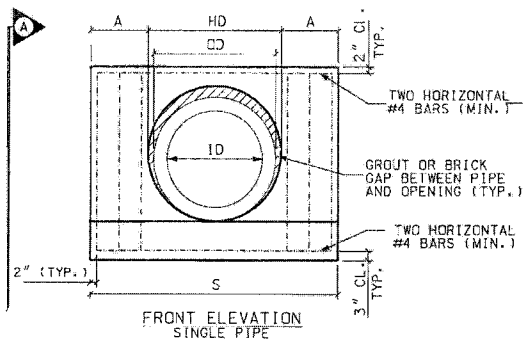

FRONT ELEVATION
SINGLE PIPE

DETAIL 2
BENT BAR

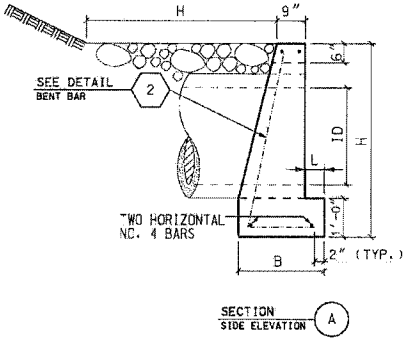

SECTION A
SIDE ELEVATION

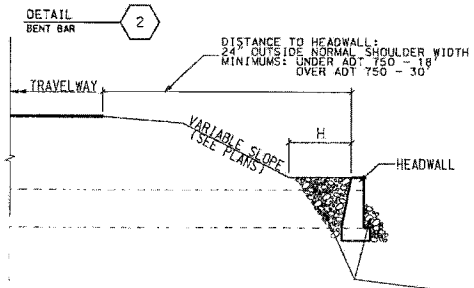

JSE CLASS B RIP-RAP IN ACCORDANCE WITH SCDOT STANDARD SPECIFICATION SECTION 804 FOR BOTH BACKFILL AND WRAP-AROUND (SEE CHART 701-605A)

DETAIL 1
INSTALLATION

NOTES:

1. FOR BUILT IN PLACE CONSTRUCTION OF THE STRAIGHT CONCRETE HEADWALL CLASS 4000 CONCRETE SHALL BE USED. FOR PRECAST CONSTRUCTION, A MINIMUM OF CLASS 4000P CONCRETE MEETING THE REQUIREMENTS OF SECTION 701 OF THE SCDOT STANDARD SPECIFICATIONS FOR HIGHWAY CONSTRUCTION (LATEST EDITION).

2. REINFORCING STEEL SHALL BE ASTM A-706, LOW-ALLOY STEEL DEFORMED BARS FOR CONCRETE REINFORCEMENT, GRADE 60.

3. GROUT SHALL BE TYPE M MORTAR MATERIAL IN ACCORDANCE WITH SECTION 718 OF THE SCDOT STANDARD SPECIFICATIONS FOR HIGHWAY CONSTRUCTION (LATEST EDITION).

4. IN THE EVENT THE HEADWALL IS SKEWED TO THE PIPE, THE PORTION OF PIPE THAT PROTRUDES BEYOND THE EXPOSED FACE OF THE HEADWALL SHALL BE CUT FLUSH AND GROUTED SMOOTH WITH THE EXPOSED FACE OF THE HEADWALL.

5. FOR THREE OR MORE LINES OF PIPE THE WIDTH (M) SHALL BE INCREASED BY THE 'HD' AND 'C' DIMENSIONS AND THE REINFORCING STEEL SHALL INCREASE ACCORDINGLY.

6. WHEN PIPES OF DIFFERENT DIAMETERS ARE USED DESIGN SHOULD COMPLY WITH DESIGN OF LARGEST PIPE.

PRECAST NOTES:

7. THE USE OF PRECAST UNITS WILL NOT RELIEVE THE CONTRACTOR OF THE RESPONSIBILITY OF OBTAINING SATISFACTORY INSTALLATIONS.

8. LIFT HOLES AND/OR DEVICES MAY BE PLACED AS NECESSARY. ALL LIFT HOLES SHALL BE GROUTED SHUT PRIOR TO COMPLETION OF THE INSTALLATION. ALL LIFTING METHODS MUST MEET OSHA REGULATIONS.

9. THE CONTRACTOR SHALL USE MANUFACTURERS LISTED ON QUALIFIED PRODUCT LIST 14.

10. PRECAST ITEMS MODIFIED FROM THIS STANDARD SHALL NOT BE LISTED ON QUALIFIED PRODUCT LIS 14. HOWEVER, CONTRACTOR SHALL SUBMIT DESIGN DRAWINGS AND CALCULATIONS TO THE ENGINEER OF RECORD FOR REVIEW.

PRECAST INSTALLATION NOTES:

11. BED SHALL BE PREPARED AND COMPACTED FOR STRAIGHT CONCRETE HEADWALL AS REQUIRED BY SCDOT STANDARD SPECIFICATIONS FOR PRECAST ITEMS. ELEVATION OF BEDDING MATERIAL SHALL BE APPROPRIATE TO ACCOMMODATE ELEVATION OF PIPE.

12. PLACE AND LEVEL PRECAST HEADWALL.

13. PIPES SHALL BE BRICKED AND GROUTED IN PLACE.

14. PIPES AND HEADWALL SHALL BE BACKFILLED AND COMPACTED AS REQUIRED BY SCDOT STANDARD SPECIFICATIONS.

15. BRICK AND MORTAR SHALL BE USED TO ADJUST ELEVATIONS OF THROAT WALLS AS REQUIRED TO MEET ELEVATION AND CROSS SLOPES.

16. ANY LOCATION WHERE THE ABOVE REQUIREMENTS CANNOT BE MET SHALL BE COMPLETED USING CAST IN PLACE MATERIALS MEETING THE REQUIREMENTS OF THIS STANDARD DRAWING. ANY ADDITIONAL MATERIALS OR COSTS ASSOCIATED WITH THE USE OF PRECAST SHALL BE PAID FOR BY THE CONTRACTOR AND MAY NOT BE CHARGED TO SCDOT.

17. THE CONTRACT UNIT PRICE FOR STRAIGHT HEADWALL FOR CIRCULAR PIPE SHALL INCLUDE THE COST OF FURNISHING ALL MATERIALS (BUILT IN PLACE OR PRECAST) AND WORK INCIDENTAL TO THE CONSTRUCTION OF THE STRUCTURE COMPLETE IN PLACE AS SHOWN (INCLUDING CLASS B RIP-RAP) IN ACCORDANCE WITH THE SCDOT STANDARD SPECIFICATIONS FOR HIGHWAY CONSTRUCTION (LATEST EDITION).

18. THE PAY ITEM SHALL BE:
STRAIGHT CONCRETE HEADWALL (____PIPE_____LINES)-EACH
SIZE NUMBER

TABLE 719-605A RIPRAP

CLASS	D_{50} (FT)	MINIMUM THICKNESS (FT)
A	0.50	1.00
B	0.75	1.50
C	1.30	2.60
D	1.80	3.60
E	2.25	4.50
F	2.85	5.70

TABLE 719-605B STRAIGHT HEADWALL FOR CIRCULAR PIPE

	SINGLE PIPE HEADWALL											MULTIPLE PIPE HEADWALL					
INSIDE DIA. (ID)	MAX OUTSIDE DIA. (OD)	MINIMUM OPENING (HD)	HEADWALL HEIGHT (H)	MINIMUM FOOTING WIDTH (B)	MINIMUM TOE WIDTH (L)	(A)	WALL WIDTH (S)	(X)	(Y)	BENT BAR QTY. ③	REBAR SIZE	RIPRAP QTY. (TON)	WALL WIDTH (M) ①	PIPE SPACE (C)	ADDITIONAL REBAR PER PIPE ④	REBAR SIZE	ADDITIONAL RIPRAP QTY. (TON/FT) ②
15"	21"	24"	3'-6"	1'-10"	0'-6"	1'-7½"	5'-3"	1'-6"	3'-0"	6	4	3	7'-9"	0'-6"	2	4	0.4
18"	24½"	28"	3'-10"	1'-11"	0'-6"	1'-7"	5'-6"	1'-7"	3'-3"	6	4	3	8'-6"	0'-8"	2	4	0.5
24"	31½"	34"	4'-4"	2'-0"	0'-6"	1'-7"	6'-0"	1'-8"	3'-9"	6	4	4	9'-6"	0'-8"	2	4	0.6
30"	38½"	42"	5'-0"	2'-2"	0'-6"	1'-6"	6'-6"	1'-10"	4'-3"	6	4	6	11'-0"	1'-0"	2	4	0.8
36"	45½"	49"	5'-7"	2'-3"	0'-6"	1'-5½"	7'-0"	1'-11"	4'-9"	6	4	8	12'-0"	0'-11"	2	4	1.0
42"	52½"	56"	6'-2"	2'-5"	0'-6"	1'-11"	8'-0"	2'-1"	5'-4"	6	4	12	14'-6"	1'-4"	3	4	1.2
48"	59½"	64"	6'-10"	3'-0"	1'-0"	1'-10"	9'-0"	2'-8"	5'-10"	6	4	15	15'-8"	1'-2"	3	4	1.5
54"	66½"	71"	7'-5"	3'-2"	1'-0"	2'-3½"	10'-6"	2'-10"	6'-4"	8	4	20	18'-0"	1'-7"	3	4	1.7
60"	73½"	78"	8'-0"	3'-3"	1'-0"	2'-3"	11'-0"	2'-11"	6'-10"	8	4	24	19'-0"	1'-6"	3	4	2.0

① (M) SHOWN IS FOR 2 PIPES OF THE SAME DIAMETER. ADJUST (M) AS REQUIRED FOR MULTIPLE PIPES OR PIPES OF VARIOUS DIAMETER.
② RIPRAP QUANTITY FOR MULTIPLE PIPE IS PER FOOT OF (M) DIMENSION
③ EACH HEADWALL REQUIRES TWO ADDITIONAL HORIZONTAL BARS IN FOOTING LENGTH (S-4") OR (M-4")
④ ADD BARS FOR EACH ADDITIONAL PIPE

TABLE 719-605C PRECAST ITEMS

STRAIGHT HEADWALL SINGLE PIPE 15" DIA. MAX. (39"X20"X63")
STRAIGHT HEADWALL SINGLE PIPE 18" DIA. MAX. (42"X21"X66")
STRAIGHT HEADWALL SINGLE PIPE 24" DIA. MAX. (48"X24"X72")
STRAIGHT HEADWALL SINGLE PIPE 30" DIA. MAX. (54"X26"X78")
STRAIGHT HEADWALL SINGLE PIPE UP TO 36" DIA. MAX. (60"X27"X84")
STRAIGHT HEADWALL SINGLE PIPE 42" DIA. MAX. (66"X29"X102")
STRAIGHT HEADWALL SINGLE PIPE 48" DIA. MAX. (72"X36"X108")
STRAIGHT HEADWALL SINGLE PIPE 54" DIA. MAX. (78"X38"X126")
STRAIGHT HEADWALL SINGLE PIPE UP TO 60" DIA. MAX. (84"X39"X132")
STRAIGHT HEADWALL MULTIPLE PIPES 15" DIA. MAX. (39"X20"XM)
STRAIGHT HEADWALL MULTIPLE PIPES 18" DIA. MAX. (42"X21"XM)
STRAIGHT HEADWALL MULTIPLE PIPES 24" DIA. MAX. (48"X24"XM)
STRAIGHT HEADWALL MULTIPLE PIPES 30" DIA. MAX. (54"X26"XM)
STRAIGHT HEADWALL MULTIPLE PIPES UP TO 36" DIA. MAX. (60"X27"XM)
STRAIGHT HEADWALL MULTIPLE PIPES 42" DIA. MAX. (66"X29"XM)
STRAIGHT HEADWALL MULTIPLE PIPES 48" DIA. MAX. (72"X36"XM)
STRAIGHT HEADWALL MULTIPLE PIPES 54" DIA. MAX. (78"X36"XM)
STRAIGHT HEADWALL MULTIPLE PIPES UP TO 60" DIA. MAX. (84"X39"XM)

DCRM-13-301-B

OSCEOLA AVENUE DRAINAGE IMPROVEMENTS
WETLAND PERMIT
CHARLESTON COUNTY, S.C.
DATE: APRIL 3, 2013
SHEET 8 OF 8

PROJECT LOCATION MAP

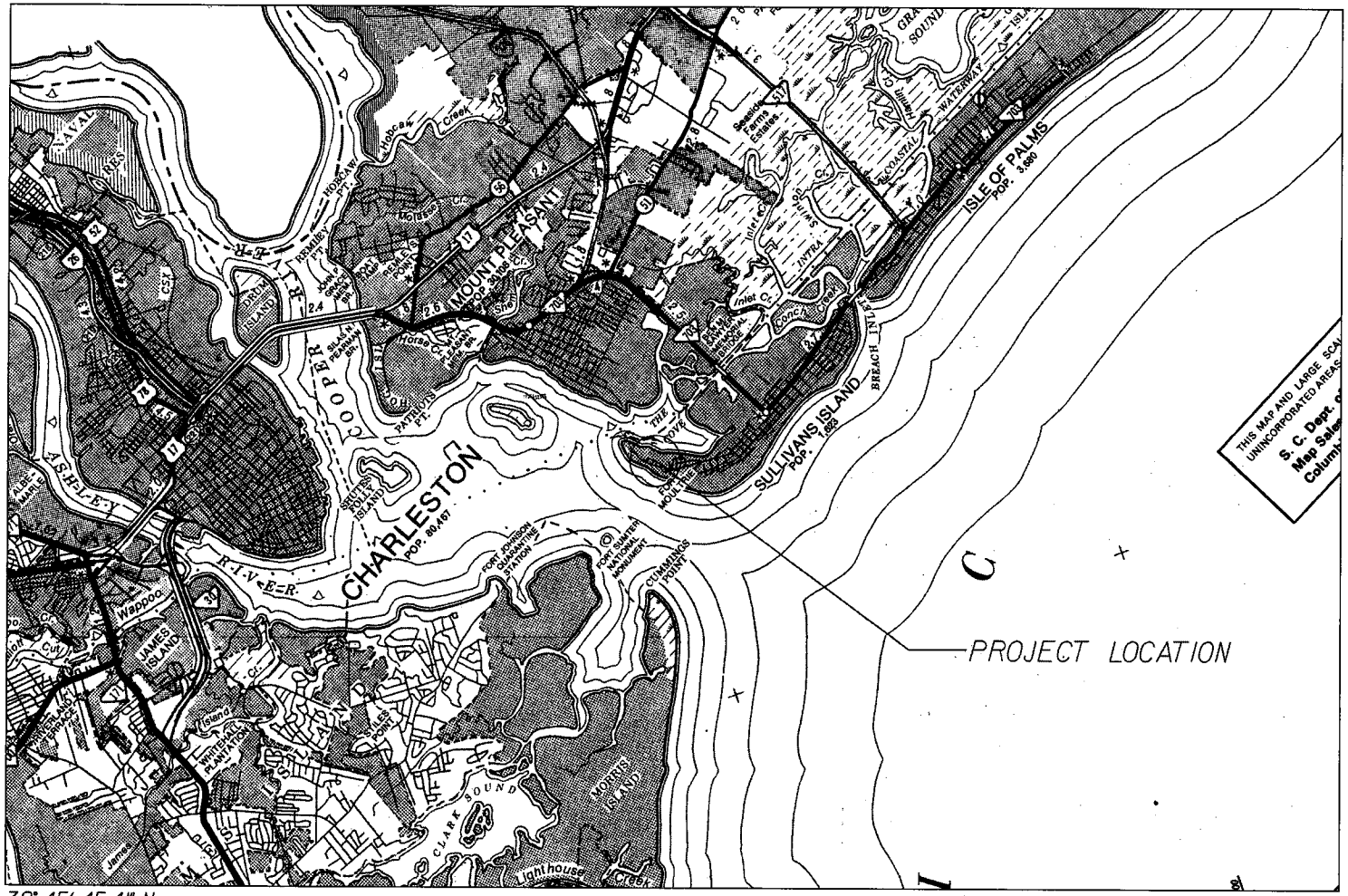

32° 45' 45.41" N
79° 51' 32.46" W

CHARLESTON COUNTY MAP (SCDOT)

OCRM-13-301-B

10,560' 0 10,560'
5,280'
GRAPHIC SCALE 1" = 2 MILES

SOUTH CAROLINA
LICENSED PROFESSIONAL ENGINEER
No. 27046
9/4/13
PETER M. VALIQUETTE

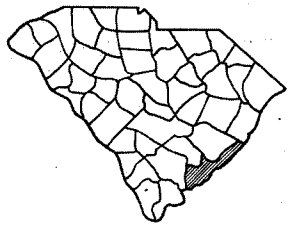

MAP SHOWING LOCATION OF CHARLESTON COUNTY IN SOUTH CAROLINA

OSCEOLA AVENUE
DRAINAGE IMPROVEMENTS
WETLAND PERMIT
CHARLESTON COUNTY, S.C.
DATE: APRIL 3, 2013
SHEET 1 OF 8

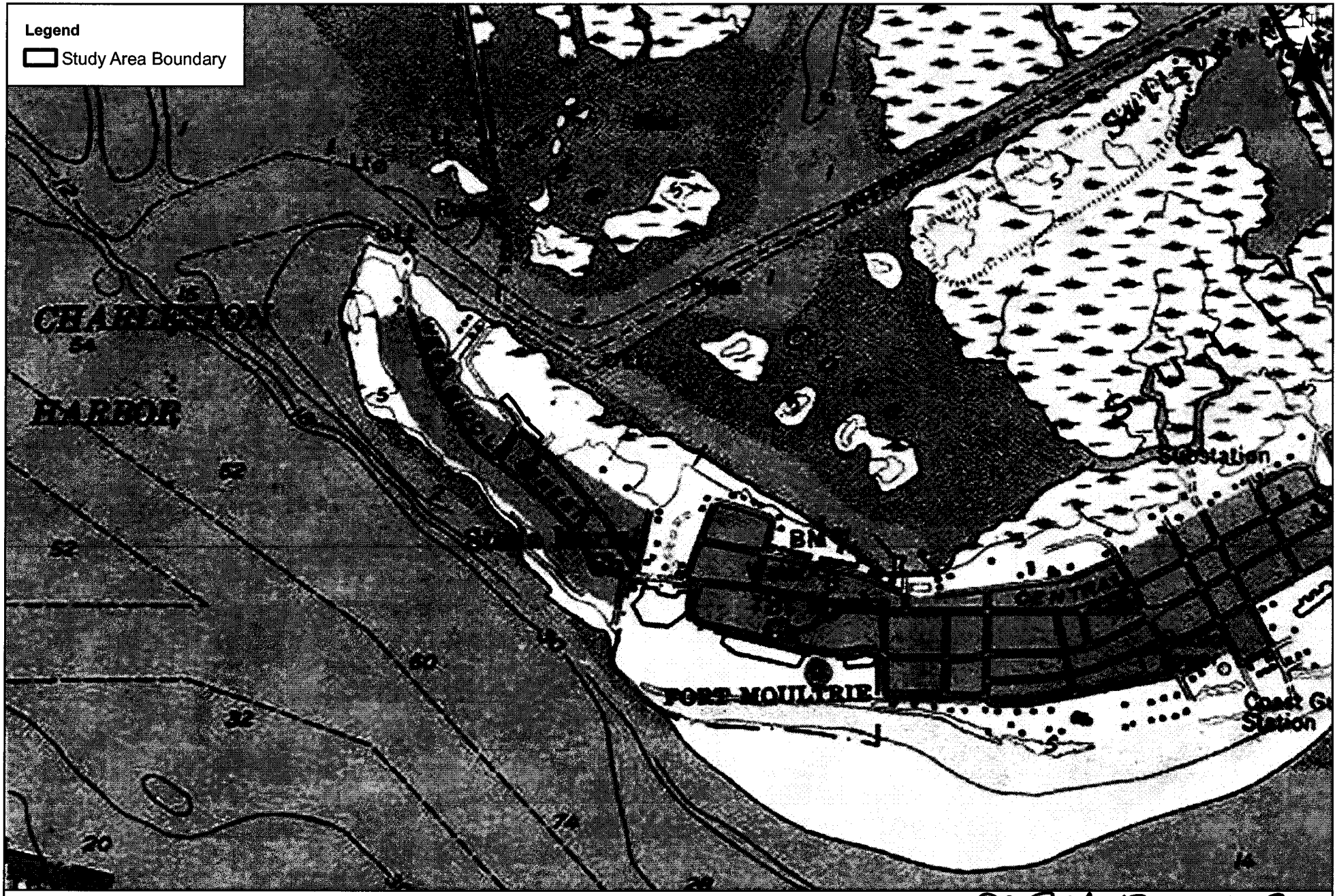

1 inch = 1,000 feet

0 500 1,000 2,000 Feet

FIGURE 2: USGS TOPOGRAPHIC QUADRANGLE MAP
Osceola Avenue Drainage Improvements
Sullivans Island, Charleston County, South Carolina

OCRM-13-301-B

Charleston County ROADWISE