JOINT
PUBLIC NOTICE

CHARLESTON DISTRICT, CORPS OF ENGINEERS
69A Hagood Avenue
Charleston, South Carolina 29403-5107
and the
S.C. DEPARTMENT OF HEALTH AND ENVIRONMENTAL CONTROL
OFFICE OF OCEAN AND COASTAL RESOURCE MANAGEMENT
1362 McMillan Avenue, Suite 400
Charleston, South Carolina 29405

REGULATORY DIVISION 21 April 2006
Refer to: SAC-2006-887-7IE-P

MAJOR ACTIVITY

Pursuant to Section 10 of the Rivers and Harbors Act of 1899 (33 U.S.C. 403), Section 401 of the Clean Water Act (33 U.S.C. 1344), and the South Carolina Coastal Zone Management Act (48-39-10 et.seq.) an application has been submitted to the Department of the Army and the S.C. Department of Health and Environmental Control by

MARYVILLE OAKS, LLC
c/o ROBERT L. JONES
3101 INDUSTRIAL DRIVE, SUITE 200
RALEIGH, NORTH CAROLINA 27609

for a permit to construct a community dock structure in

WINYAH BAY

at Sassanqua Drive, in The Oaks at Winyah Bay, Georgetown, Georgetown County, South Carolina. (Latitude – 33.34326; Longitude – 79.28642)

In order to give all interested parties an opportunity to express their views

NOTICE

is hereby given that written statements regarding the proposed work will be received by both of the above mentioned offices until

12 O'CLOCK NOON, MONDAY, 8 MAY 2006

from those interested in the activity and whose interests may be affected by the proposed work.

The proposed work consists of constructing a timber dock structure with a 16' x 20' covered fixed pierhead attached to highland by a 6' X 973' walkway. In addition, the applicant proposes to install a 10' x 30' floating dock on the downstream side of the fixed pierhead and attached to the fixed pierhead by a 3' x 20' gangway. The purpose of this work is for the private recreational use of the future residents of The Oaks at Winyah Bay.

NOTE: Plans depicting the work described in this notice are available and will be provided, upon receipt of a written request, to anyone that is interested in obtaining a copy of the plans for the specific project. The request must identify the project of interest by public notice number and a self-addressed stamped envelope must also be provided for mailing the drawings to you. Your request for drawings should be addressed to the

REGULATORY DIVISION
Refer to: SAC-2006-887-7IE-P
Maryville Oaks, LLC

21 April 2006

U.S. Army Corps of Engineers
ATTN: REGULATORY DIVISION
69A Hagood Avenue
Charleston, South Carolina 29403-5107

The District Engineer has concluded that the discharges associated with this project, both direct and indirect, should be reviewed by the South Carolina Department of Health and Environmental Control in accordance with provisions of Section 401 of the Clean Water Act. As such, this notice constitutes a request, on behalf of the applicant, for certification that this project will comply with applicable effluent limitations and water quality standards. The work shown on this application must also be certified as consistent with applicable provisions the Coastal Zone Management Program (15 CFR 930). The District Engineer will not process this application to a conclusion until such certifications are received. The applicant is hereby advised that supplemental information may be required by the State to facilitate the review.

This notice initiates the Essential Fish Habitat (EFH) consultation requirements of the Magnuson-Stevens Fishery Conservation and Management Act. Implementation of the proposed project would impact estuarine substrates and emergent wetlands utilized by various life stages of species comprising the red drum, shrimp, and snapper-grouper management complexes. Our initial determination is that the proposed action would not have a substantial individual or cumulative adverse impact on EFH or fisheries managed by the South Atlantic Fishery Management Council and the National Marine Fisheries Service (NMFS). Our final determination relative to project impacts and the need for mitigation measures is subject to review by and coordination with the NMFS.

Pursuant to Section 106 of the National Historic Preservation Act (NHPA), this public notice also constitutes a request to Indian Tribes to notify the District Engineer of any historic properties of religious and cultural significance to them that may be affected by the proposed undertaking.

In accordance with the NHPA, the District Engineer has also consulted the latest published version of the National Register of Historic Places for the presence or absence of registered properties, or properties listed as being eligible for inclusion therein, and this worksite is not included as a registered property or property listed as being eligible for inclusion in the Register. To insure that other cultural resources that the District Engineer is not aware of are not overlooked, this public notice also serves as a request to the State Historic Preservation Office to provide any information it may have with regard to historic and cultural resources.

Any person may request, in writing, within the comment period specified in this notice, that a public hearing be held to consider this application. Requests for a public hearing shall state, with particularity, the reasons for holding a public hearing.

The decision whether to issue a permit will be based on an evaluation of the probable impact including cumulative impacts of the activity on the public interest. That decision will reflect the national concern for both protection and utilization of important resources. The benefit which reasonably may be expected to accrue from the project must be balanced against its reasonably foreseeable detriments. All factors which may be relevant to the project will be considered including the cumulative effects thereof; among those are conservation, economics, aesthetics, general environmental concerns, wetlands, historic properties, fish and wildlife values, flood hazards, flood plain values, land use, navigation, shoreline erosion and accretion, recreation, water supply and conservation, water quality, energy needs, safety, food and fiber production and, in general, the needs and welfare of the people. A permit will be granted unless the District

Engineer determines that it would be contrary to the public interest. In cases of conflicting property rights, the Corps of Engineers cannot undertake to adjudicate rival claims.

The Corps of Engineers is soliciting comments from the public; Federal, state, and local agencies and officials; Indian Tribes; and other interested parties in order to consider and evaluate the impacts of this activity. Any comments received will be considered by the Corps of Engineers to determine whether to issue, modify, condition or deny a permit for this project. To make this decision, comments are used to assess impacts on endangered species, historic properties, water quality, general environmental effects, and the other public interest factors listed above. Comments are used in the preparation of an Environmental Assessment and/or an Environmental Impact Statement pursuant to the National Environmental Policy Act. Comments are also used to determine the need for a public hearing and to determine the overall public interest of the activity.

If there are any questions concerning this public notice, please contact me at 843-329-8044 or toll free at 1-866-329-8187.

Jackie Easterling
Project Manager
Regulatory Division
U.S. Army Corps of Engineers

Tess Rodgers
Project Manager
SCDHEC-OCRM

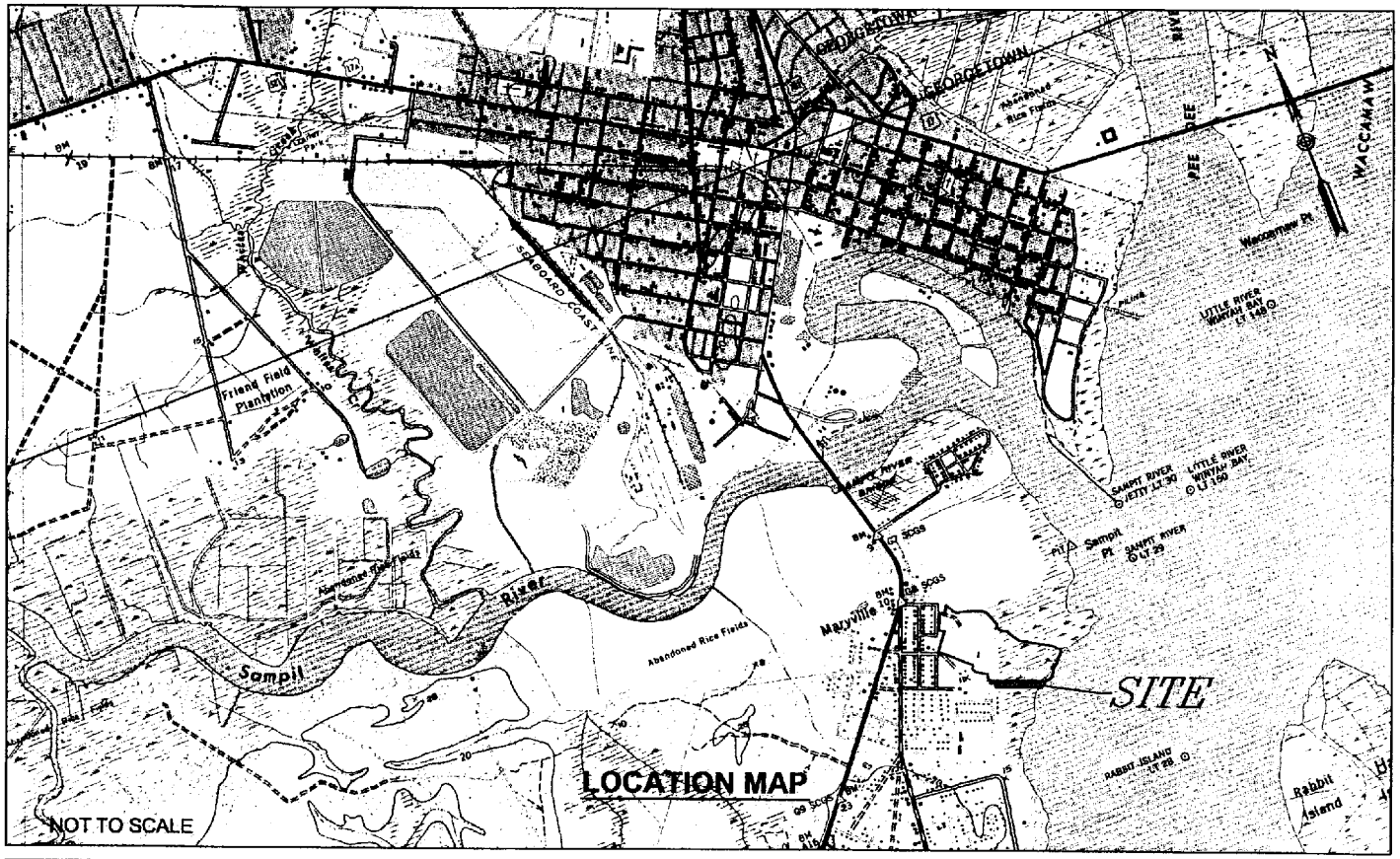

LOCATION MAP

APPLICANT: MARYVILLE OAKS, LLC PROPOSED ACTIVITY: PRIVATE COMMUNITY DOCK PERMIT # SAC-2006-887	PROJECT LOCATION: THE OAKS AT WINYAH BAY GEORGETOWN, SC SCPLS#17924 COUNTY: GEORGETOWN	ADJACENT PROPERTY OWNERS: JASPER H. JOHNSON, JR. KATHRYN S. HARRELSON Sheet 1 of 5 DATE: MARCH 2, 2006

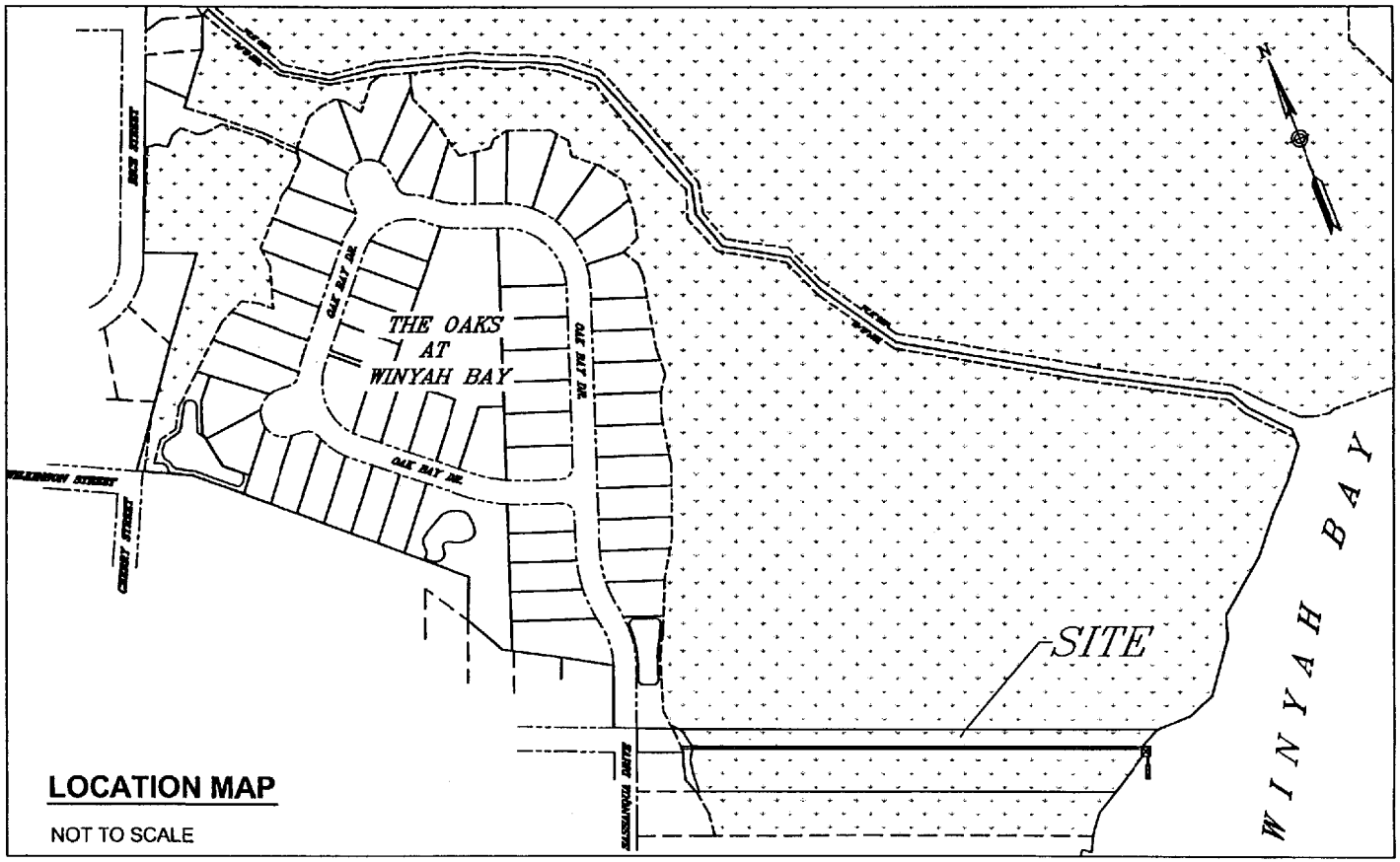

LOCATION MAP

NOT TO SCALE

APPLICANT:
MARYVILLE OAKS, LLC

PROPOSED ACTIVITY:
PRIVATE COMMUNITY DOCK

PERMIT # SAC- 2006-887

PROJECT LOCATION:
THE OAKS AT WINYAH BAY
GEORGETOWN, SC

SCPLS#17924

COUNTY:
GEORGETOWN

ADJACENT PROPERTY OWNERS:
JASPER H. JOHNSON, JR.
KATHRYN S. HARRELSON

Sheet 2 of 5

DATE: MARCH 2, 2006

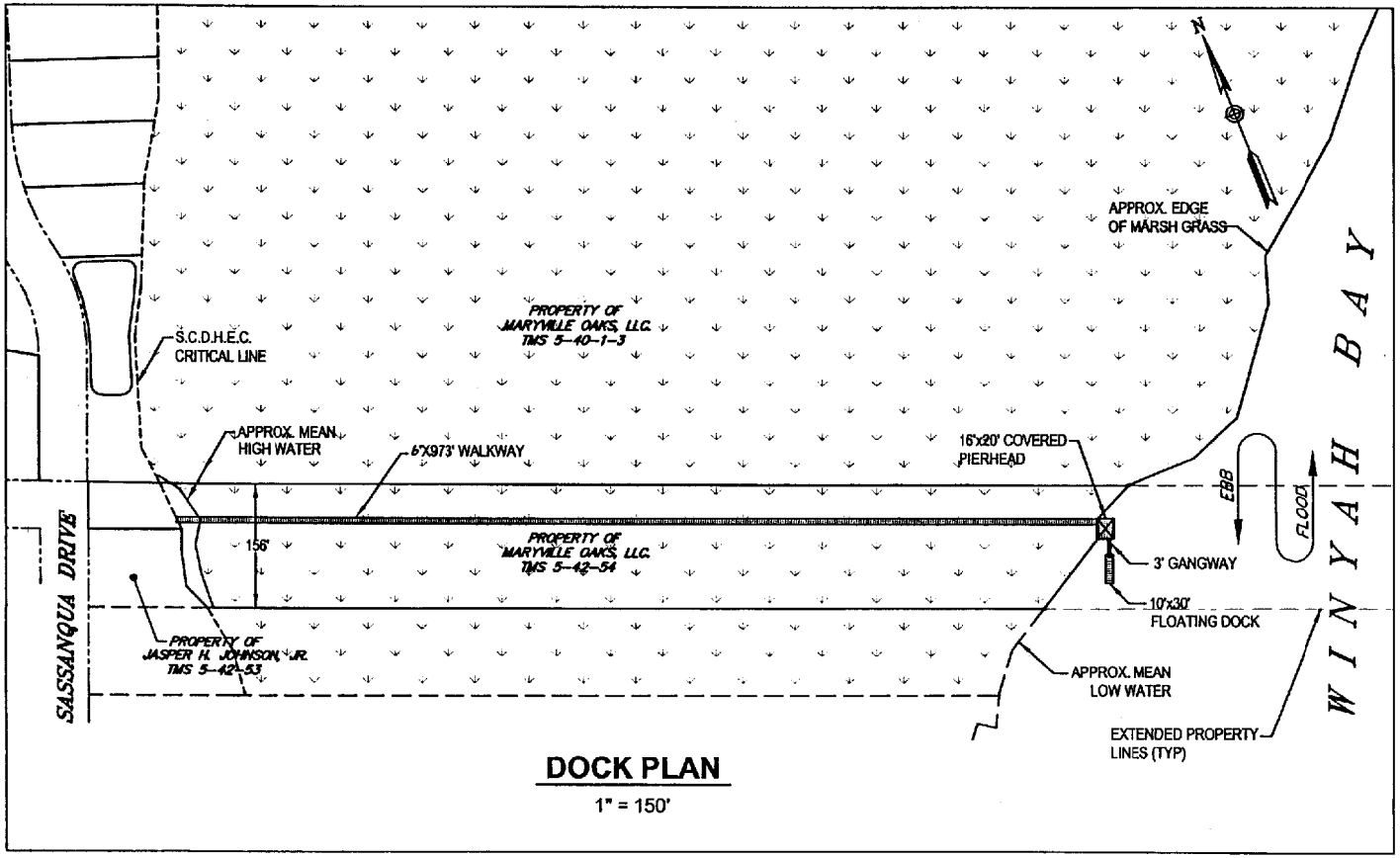

DOCK PLAN

1" = 150'

APPLICANT:
MARYVILLE OAKS, LLC.

PROPOSED ACTIVITY:
PRIVATE COMMUNITY DOCK

PERMIT # SAC- 2006-887

PROJECT LOCATION:
THE OAKS AT WINYAH BAY
GEORGETOWN, SC

SCPLS #17924

COUNTY:
GEORGETOWN

ADJACENT PROPERTY OWNERS:
JASPER H. JOHNSON, JR.
KATHRYN S. HARRELSON

Sheet 3 of 5

DATE: MARCH 2, 2006

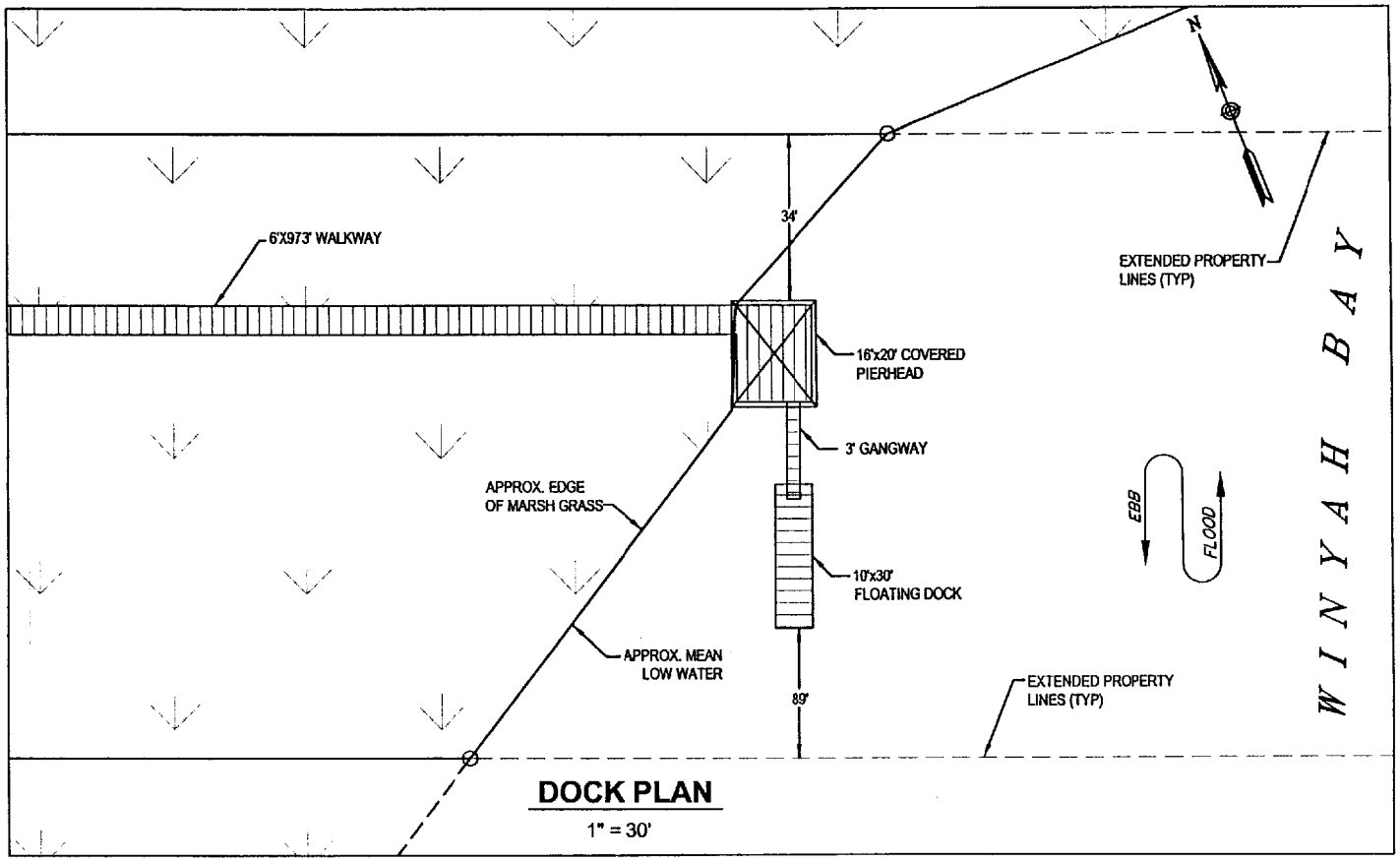

DOCK PLAN

1" = 30'

APPLICANT:
MARYVILLE OAKS, LLC.

PROPOSED ACTIVITY:
PRIVATE COMMUNITY DOCK

PERMIT # SAC- 2006- 887

PROJECT LOCATION:
THE OAKS AT WINYAH BAY
GEORGETOWN, SC

SCPLS# 17924

COUNTY:
GEORGETOWN

ADJACENT PROPERTY OWNERS:
JASPER H. JOHNSON, JR.
KATHRYN S. HARRELSON

Sheet 4 of 5

DATE: MARCH 2, 2006

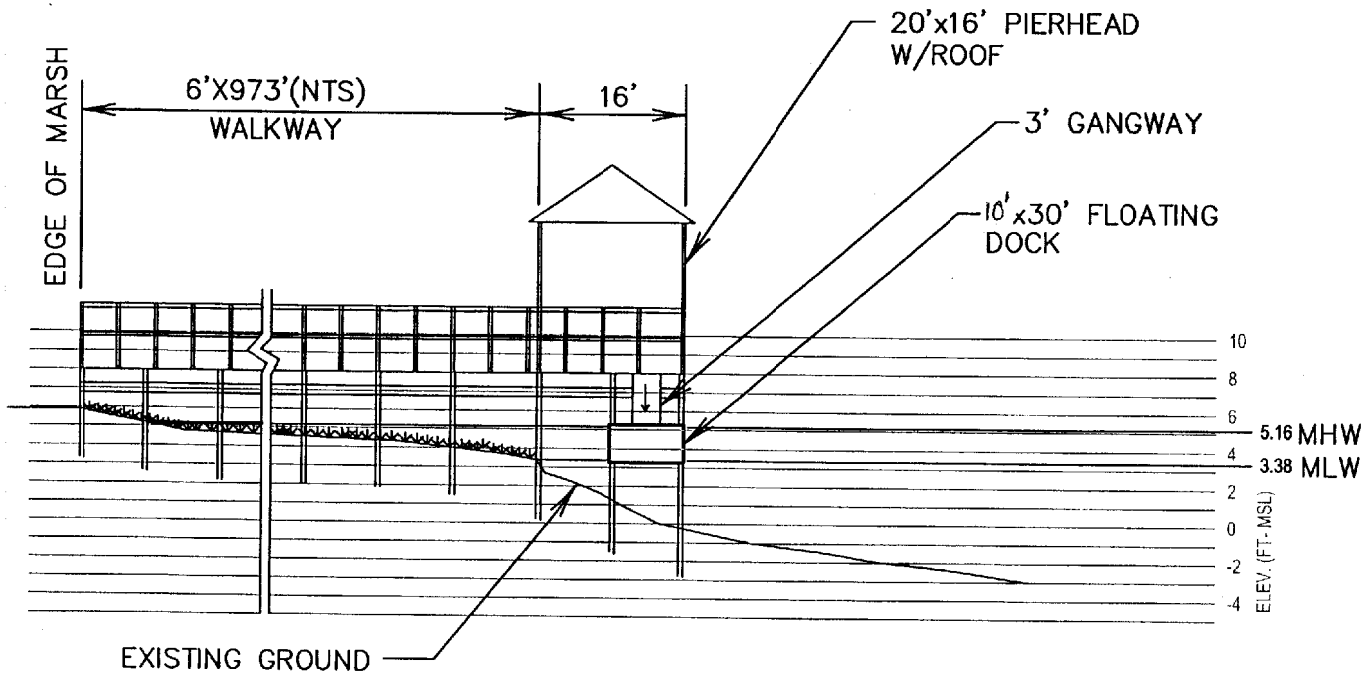

DOCK PLAN

NTS

APPLICANT:
MARYVILLE OAKS, LLC.

PROPOSED ACTIVITY:
PRIVATE COMMUNITY DOCK

PERMIT # SAC-2006-887

PROJECT LOCATION:
THE OAKS AT WINYAH BAY
GEORGETOWN, SC

SCPLS#-17924

COUNTY:
GEORGETOWN

ADJACENT PROPERTY OWNERS:
JASPER H. JOHNSON, JR.
KATHRYN S. HARRELSON

Sheet 5 of 5

DATE: MARCH 2, 2006