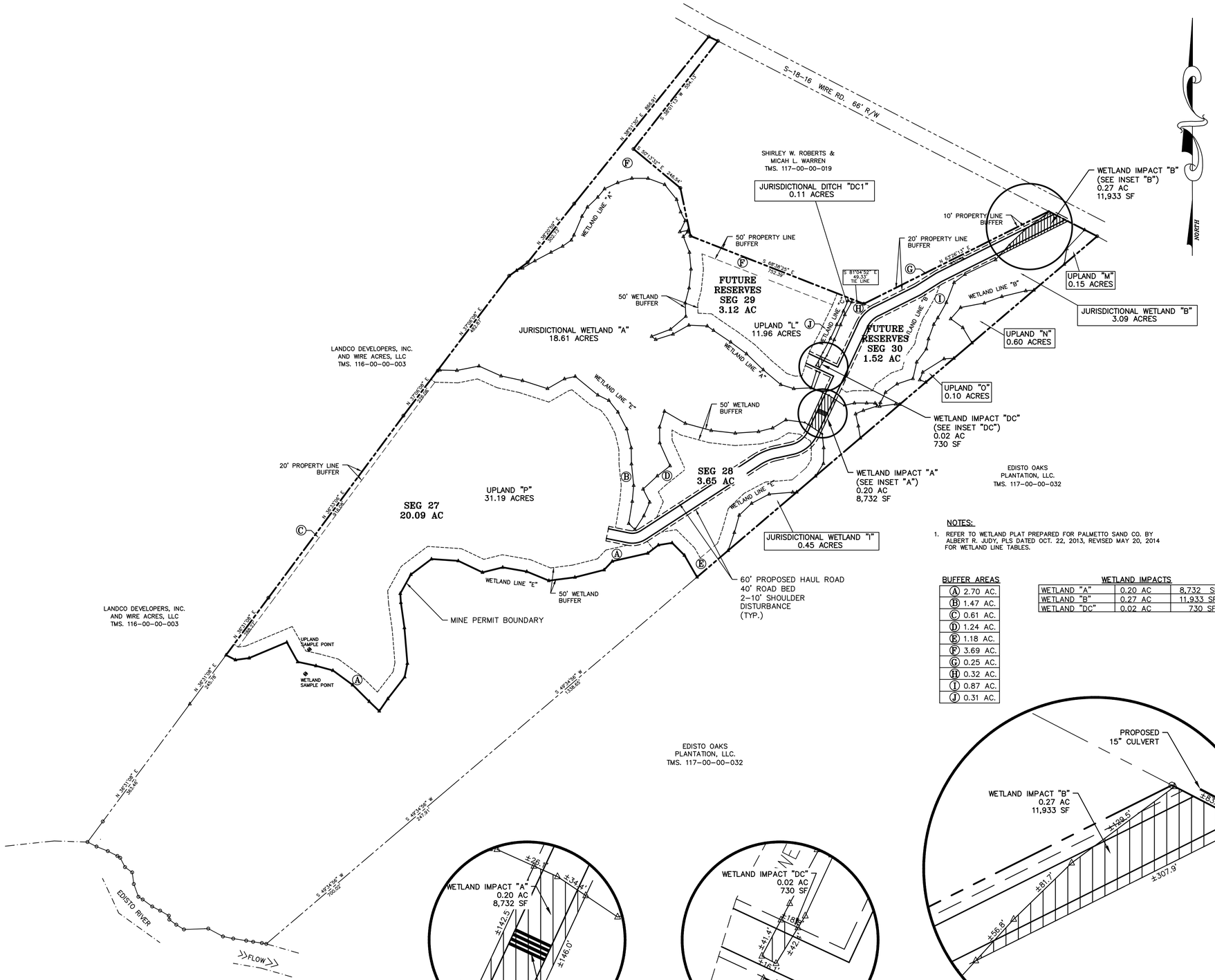

NOTES:

1. REFER TO WETLAND PLAT PREPARED FOR PALMETTO SAND CO. BY ALBERT R. JUDY, PLS DATED OCT. 22, 2013, REVISED MAY 20, 2014 FOR WETLAND LINE TABLES.

BUFFER AREAS

(A)	2.70 AC.
(B)	1.47 AC.
(C)	0.61 AC.
(D)	1.24 AC.
(E)	1.18 AC.
(F)	3.69 AC.
(G)	0.25 AC.
(H)	0.32 AC.
(I)	0.87 AC.
(J)	0.31 AC.

WETLAND IMPACTS

WETLAND "A"	0.20 AC	8,732 SF
WETLAND "B"	0.27 AC	11,933 SF
WETLAND "DC"	0.02 AC	730 SF

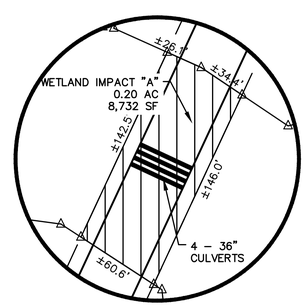

INSET "A"
SCALE: 1" = 50'

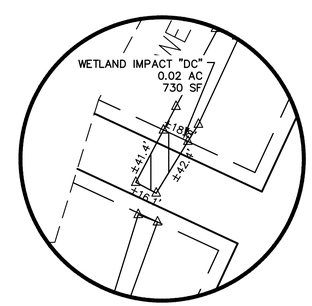

INSET "DC"
SCALE: 1" = 50'

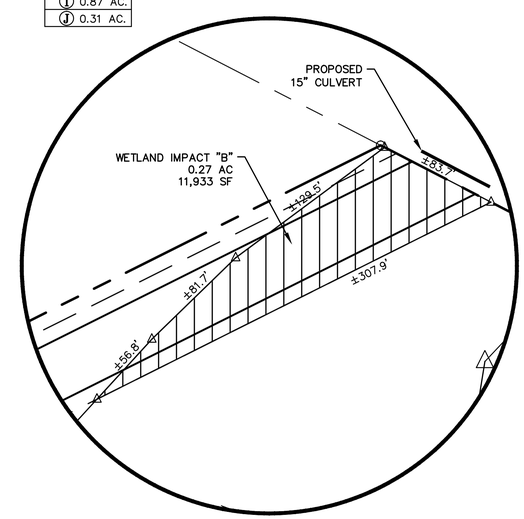

INSET "B"
SCALE: 1" = 50'

REVISIONS

Description	Date	By

Kennedy Consulting Services, LLC
Craig Kennedy, P.G.
KCS
Office: 403 Seaside Ct. Lexington, SC 29072 Tel. 803.399.1133
Mail: P.O. Box 364 Irmo, SC 29063 • Cell 803.960.2562 • craigkennedy.KCS@gmail.com

Pine Bluff East Modification
Pine Bluff East Mine Map
Prepared for
Palmetto Sand Company, Inc.
Dorchester County .. South Carolina

Project No.: KCS 14-46
Date: 12/28/2014
Approved by: RCK
Drawn by: DLH
Scale: 1"=200'
Map No.: KCS 14-46-02

Sheet No. 2 of 3