SOUTH CAROLINA

DEPARTMENT OF HEALTH AND ENVIRONMENTAL CONTROL

BUREAU OF LABORATORIES

SERVICES GUIDE

Shahiedy I. Shahied, Ph.D., HCLD
BUREAU DIRECTOR

TENTH EDITION
2006
Revised 11-14-07
Revised 03-03-08
Revised 10-30-08
Revised 11-5-08 (Section IV)
Revised 03-23-09
Revised 11-30-09
Revised 03-31-10
Revised 09-29-10
Revised 04-29-11
Revised 07-17-12
Revised 12-12-12
Revised 02-05-13 (Title page, I-2, II-6, II-13)
Revised 04-23-13 (Title page, I-2, II, III, IV, VI)
Revised 07-01-13 (Title page, I-2, II, VI)
Revised 04-14-14
Revised 06-30-15
Revised 06-28-16

SERVICES GUIDE
DHEC Bureau of Laboratories
TABLE OF CONTENTS

I. ADMINISTRATION

ORGANIZATION

General Information (Address, business hours, etc) I-1
Specimen Receiving I-2
After Hours Delivery of Specimens & Contact Persons I-2
Accreditation and Certification I-2

TESTING POLICIES

Persons Authorized to Order Tests I-3
Verification of Orally Ordered Tests I-3
Requesting Repeat Testing on Serological Specimen I-3
Specimens Referred to CDC I-3
Specimens Referred to Other Reference Labs I-3
STAT Testing I-3
Confirmatory Testing I-4
Specimens Sent to the BOL in Error I-4
Correction of Patient Information I-4

SPECIMEN REJECTION & DISCLAIMER POLICIES

No Specimen Received I-5
No Request Form Received I-5
No Name on Specimen/Request Form I-5
No Test Requested I-5
Missing or Mismatched Information I-5
Partial Information Matches I-6
Specimens Broken or Leaked in Transit I-6
Incorrect Specimen Received I-6
Unsatisfactory Specimen Received I-6

RESULTS REPORTING POLICIES

Reporting Schedule I-6
Telephoning Results I-6
Copies of Results Reports I-6
Re-mailing of Results Reports I-7
Correcting Reporting Errors I-7

DISEASE REPORTING I-7

II. ALPHA LISTING OF TESTS AVAILABLE with Test Information II-1

III. ORDERING SUPPLIES AND SPECIMEN COLLECTION

ORDERING SUPPLIES

Collection Kits III-1
Transport Medium III-1

Other Supplies III-1

Mailing/Shipping Containers III-2
Test Request Forms III-2
General Instructions for Completing III-3
County Codes III-4
Sender Numbers III-4
Billing Numbers III-5
DHEC Program Numbers..... III-5

SPECIMEN COLLECTION PROCEDURES
Venipuncture Using the Vacuum System …..,……III-6
Venipuncture Using a Butterfly System System ……...III-10
Fingerstick Procedure for Patients Greater Than 1 Year Old…….III-15
Dried Blood Spots for Newborn Screening……III-18
Heel-stick Procedure for Patients Less Than 1 Year Old……...III-22
Blood Collection for HCV Total Antibody and PCR Quantitation III-26
Blood Collection for QuantiFERON-TB Gold……III-27
Specimen Collection for Culture and ID
Enteric Pathogens (Stool) III-29
Neisseria gonorrhoea..... III-30
Diphtheria……..... III-32
Mycobacterium (TB)..... III-33
Viral Culture (Stool)……..III-36
Viral Culture/Respiratory Culture/Herpes Culture (non-stool) III-37
Specimen Collection For Other Tests and Procedures
Bordetella Pertussis Detection by PCR/Culture III-38
Chlamydia/GC (Gen-Probe)..... III-40
Skin Scrapings for Scabies III-44

IV. TRANSPORTING AND SHIPPING INFECTIOUS SUBSTANCES A AND B

Shipping by US Mail or State Courier IV-1
Shipping Infectious Substances..... IV-1
Shipping Dried Blood Spots for Newborn Screening IV-2
International Air Transport Association (IATA) Shipping Regulation …… IV-3
Definitions of Infectious Substance IV-4
Classifying Infectious Substances IV-6
US DOT Classification Chart..... IV-7
Examples of Shipping Categories IV-8
Proper Shipping Names and UN Numbers..... IV-9
Packing Infectious Substances for Transport IV-9
Shipper's Declaration for Dangerous Goods..... IV-14
Shipping Temperatures IV-15
Labeling and Marking Requirements for Dry Ice IV-15
Transporting Infectious Substances in Private or DHEC Vehicles IV-16
BOL Shipping Address IV-16
BOL Shipping Contact Information IV-16

Bioterrorism Specimens and Cultures..... IV-17
Important Points to Remember..... IV-18
References IV-19

Example of a Properly Completed Shipper's Declaration for Dangerous Goods IV-20

V. FEES AND BILLING PROCEDURES

Test Fee Policy V-1
Billing Procedure..... V-2

VI. INDEX..... VI-1

PURPOSE OF MANUAL

The purpose of this manual is to provide our clients with information about the laboratory testing availability and to provide a guide for collecting and submitting specimens.

This edition can also be accessed on DHEC websites at:
http://dhecnet/hs/manuals.htm
http://webdev/hs/lab/
http://www.scdhec.gov/Health/FHPF/LabCertificationServices/LabServicesGuide/

MISSION STATEMENT

The mission of the Bureau of Laboratories is to provide laboratory-based health and environmental assessments for accurate diagnosis, prevention and surveillance of infectious and chronic diseases, congenital disorders and environmental hazards to reduce the incidence of illness and death and to improve the quality of life among the people of the state.

GENERAL INFORMATION

The Bureau of Laboratories, S.C. Department of Health and Environmental Control, formerly named the State Public Health Laboratory, is a multi-disciplinary, integrated source of diagnostic services including analytical support and consultation for physicians, private laboratories, hospitals, and county health departments. The Bureau of Laboratories is prepared to assist in any national public health emergency.

PHYSICAL ADDRESS:

The Bureau of Laboratories is located in the James A. Hayne Building at 8231 Parklane Road, Columbia, South Carolina 29223, on the campus of the State Park Health Center. State Park is located between Highway 555 (Farrow Road), Parklane Road and the I-77 connector (Bull Street extension or S.C. I-277) two miles north of I-20; 2 miles west of Columbia Mall. Using the Parklane Road Entrance, the Hayne Building is at the end of the first left turn.

HOURS OF BUSINESS

The official working hours are from 8:00 A.M. to 4:00 P.M. Monday through Friday.

AFTER HOURS, WEEKEND AND HOLIDAY

The laboratory maintains an ON-CALL Roster for all weekends and holidays. Individuals requesting information or services of an emergency nature can call the main number, 803-896-0800. This number transfers to an answering service who will contact the Director on call.

EMERGENCY RESPONSE/ DISASTER PREPAREDNESS

As part of the DHEC's Emergency Preparedness Plan of Action for emergencies, the Bureau of Laboratories is equipped and the staff is trained to respond rapidly and effectively to a medical emergency natural disaster or Act of Bioterrorism. If the emergency occurs outside of regular working hours, personnel will be called back or work overtime as needed to provide laboratory support.

SPECIMEN RECEIVING

Specimens transported by General Services' courier are placed in specially marked boxes and are picked up by lab staff from the Columbia Mills building between 5:00 AM and 6:00 AM Tuesday through Friday. Specimens are picked up by laboratory staff on Saturday and holiday between 7:00 AM and 8:00 AM from the U.S. Post Office and DHEC at 301 Gervais Street. These are sorted and stored according to established protocol to be accessioned on the next working day.

Specimens sent by first class mail are delivered from the Columbia Mills building by DHEC courier at 9:00 AM Monday through Friday. Those with a Parklane Road address are picked up by the Supply staff at 9:00 AM. The U.S. Post Office delivers at approximately 12:30 PM, Monday through Friday.

Specimens are accepted at the Hayne Building during business hours of 8:00 AM to 4:00 PM Monday through Friday, except for state holidays. Private couriers delivering specimens at the back entrance of the Hayne Building should call Specimen Management at 803-896-0898 for pick up. Private individuals delivering specimens must enter the building through the front entrance. The American Security Officer will assist them.

AFTER HOURS DELIVERY OF SPECIMENS

Specimens other than Newborn Screening samples will not be accepted after hours unless special arrangements have been made with the laboratory section conducting the test. This person will notify the American Security Officer on duty that a delivery is expected.

The after hours depository located in the rear of the Hayne Building is for animal heads being delivered for rabies testing only. Please do not put specimens and cultures in the depository.

Newborn screening specimens can be accepted at the Security Desk of the Hayne Building after business hours. Couriers delivery from hospitals will sign the specimens in on a log kept at the Security Desk. Holiday and Saturday delivery of Newborn screening specimens shipped using FedEx/UPS can also be accepted by the Security Desk.

CONTACT PERSONS AND PHONE NUMBERS

(Area Code 803)

Results.....896-0898
Laboratory Request Forms/Mailing Containers.....896-0913
Facilities Maintenance (Laboratory Instrument Services) 896-0919
Bureau Director……Shahiedy I. Shahied, Ph.D., HCLD…….....896-0965
Assistant Laboratory Director……....Robert B. Dixon, Ph.D., HCLD……896-9725
Director, Chemistry Division……Vacant……..…….. .896-
Director, Microbiology Division……Megan L. Davis, M.S..……...……..896-0870
Director, Support Division…….Evelyn Y. Edwards, M.P.H 896-0897
Director, Logistic Division……David C. Rivers…….....896-0923
Office of Quality Assurance……..Roberta Bartholdi, MS MT (ASCP)……896-3897
Office of Laboratory Safety……Vacant……..…….……..896-0956

LABORATORY ACCREDITATION AND CERTIFICATION

CLINICAL TESTING - CLIA ID # 42D0658606
DAIRY PRODUCTS - FDA # 45001

TESTING POLICIES

PERSONS AUTHORIZED TO ORDER TESTS

The Laboratory will accept clinical laboratory specimens for testing from physicians, health departments, and hospital laboratories, or as provided by South Carolina statues. These senders will be responsible for receiving, relating, interpreting, and/or distributing the data. A clinical laboratory specimen is described as any material derived from the human body for the purpose of diagnosis, prevention, treatment or assessment for medical or legal purposes. Inanimate substances and other samples submitted for examination (e.g., food samples, animal heads for rabies, veterinary specimens, etc) may be accepted from private citizens at the discretion of the Division Director, Laboratory Supervisor, or Bureau Director.

VERIFICATION OF ORALLY ORDERED TESTS

When additional tests are requested by telephone, the caller is asked to follow up with a written request on letterhead, or an additional laboratory request form for the test(s) requested. Please send written request to the attention of the Specimen Management Section or to the Laboratory Supervisor. The additional test(s) will not be performed until the written request is received. With time sensitive tests, the specimen may be tested immediately and the results held until the written request is received. In this case the caller may fax the request to the Laboratory. The caller should obtain the proper fax number at the time of their request. To process and test a specimen without a written request, the oral request is recorded in the telephone log of the area receiving the call: **Exception: No HIV tests will be performed without written request at the time of testing**. All blood specimens will be discarded if a written request is not received within seven working days.

REQUESTING REPEAT TESTING ON A SEROLOGY SPECIMEN

To request a repeat serology test call Specimen Management at (803) 896-0898. Specimens are discarded after seven working days. A retest request must be made within that time period. Repeat testing on the same specimen may not always be feasible. The testing laboratory may request additional information to determine the best approach. In some cases, a second (new) specimen for testing may be recommended. In other cases, the patient's clinical history may provide an explanation for the initial result, and retesting may not be necessary.

SPECIMENS REFERRED FOR TESTING TO CDC

Laboratories wishing to send specimens directly to CDC should contact Microbiology Division at (803) 896-0870. The sender will be assigned a State Health Department number and will be asked to fax or mail to the Laboratory a copy of the information being sent. CDC forms are also available from the Laboratory.

OTHER REFERENCE LABORATORIES

If a specimen is sent to a reference laboratory for initial, follow-up or verification testing by the Bureau of Laboratories, the sender will be notified that the specimen has been referred. The original result report from the reference laboratory is forwarded or faxed to the sender. A copy of the report is maintained by the laboratory.

STAT TESTING

Requests received in the morning mail will be put in the day's run. The results will be telephoned to the requestor, followed by a hard copy report or accessed report via the Internet. If the request is for a test that will not be performed immediately, the requestor will be informed by telephone when the test will be performed and the result available.

CONFIRMATORY TESTING

When confirmatory tests are necessary, patient results are not released until all testing is completed.

LABORATORY SPECIMENS SENT TO THE BUREAU OF LABORATORIES IN ERROR

Specimens sent to the laboratory in error will be returned to the sender as soon as possible.

CORRECTION OF PATIENT INFORMATION

All requested changes to the request form by the sender must be documented on letterhead, dated and signed by the requestor. A returned copy of the original laboratory report requesting the missing information is acceptable to communicate changes needed as long as the sender states clearly what is needed, dates, and signs or photocopy the report**.** The patient's record will be updated to reflect the change and corrected (amended) report will be mailed to the sender.

SPECIMEN REJECTION & DISCLAIMER CRITERIA, "Exceeds 24 Hours Limit for Valid Testing"

The following tests have a 24 hour limit for valid testing results CANNOT be collected and/or sent any Friday or 24 hours BEFORE a state holiday: Hepatitis C, Quantitation by PCR (RNA), HIV-1 PCR Quantitative (RNA), CBC, CD4 and/or Malaria specimen sent as an EDTA tube with no thick and/or thin smear.

These are considered universal rejections as they apply to all specimens submitted for testing. Specific test related rejections are listed in the Alpha Listing of Test (Section II) and the Collection Procedures (Section III).

NO SPECIMEN RECEIVED

When a request form is received without a specimen, a computer inquiry is made to determine if the specimen has been received with another test request. If so, the specimen is obtained and aliquot for all tests. If no specimen is found, the request form is numbered, processed, and reported "No specimen received."

NO REQUEST FORM RECEIVED

If a specimen is received without a request form and the sender cannot be identified from the specimen label, the specimen will be held awaiting telephone inquiry or delayed receipt of form. After seven days the blood specimen is discarded. Gen-Probe Aptima swab specimen is discarded after 60 days and the Gen-Probe Aptima urine specimen is discarded after 30 days.

NO NAME ON SPECIMEN

When a specimen is received without an identifying number or patient name, it WILL NOT be tested. An exception may be made for a specimen that cannot be recollected because of its unique anatomic source, collection method or time of collection. Examples include: CSF, peritoneal pleural and synovial fluids, autopsy, biopsy, or organ specimens, and specimens collected prior to the initiation of antimicrobial therapy.

NO NAME ON REQUEST FORM

When a request form is received without a name, and there is no other identification on the form that matches the information on the specimen, the specimen will be reported as "No name on form."

NO TEST REQUESTED

When a specimen is received, and there is no test marked on the request form and the sender is known, the specimen will be held and the sender notified by phone to fax or mail a corrected request form. When the corrected request form is received, the specimen will be tested. If not, it will be reported as "No test requested. If you want this specimen tested write the test number on this form and send to the lab. We will discard this specimen 7 days after the date received shown above."

OTHER MISSING INFORMATION

If other necessary information is missing, the specimen will be tested and the missing information will be requested by phone, fax, or mail. The result will be held until the missing information is received.

MISMATCHED INFORMATION

When the name on the request form and the specimen do not match, the specimen will not be tested. It will be reported as "Name on specimen differs from name on request form."

PARTIAL INFORMATION MATCHES

When there is a partial name match and other data on the request form matches, it is most probably the same patient. The name on the tube is written on the request form, and the test is run and a disclaimer added to the report.

SPECIMEN BROKEN OR LEAKED IN TRANSIT

When a broken or leaking specimen is received, every attempt will be made to salvage it without compromising the integrity of the specimen. An exception is made for TB Culture of sterile body fluids.

INCORRECT SPECIMEN RECEIVED

If the specimen received is incorrect for the test requested, a search is initiated to determine if the correct specimen was received with a request form for a different test. If the specimen is found, testing will be done. If the specimen is not found, the specimen is reported as "incorrect specimen submitted."

UNSATISFACTORY SPECIMENS

Specimens collected with 24 hour limit for valid testing results CANNOT be collected and/or sent any Friday or 24 hours BEFORE a state holiday: Hepatitis C, Quantitation by PCR (RNA), HIV-1 PCR Quantitative (RNA), CBC, CD4 and/or Malaria specimen sent as an EDTA tube with no thick and/or thin smear.

The Bureau of Laboratories will not examine and will discard specimens which are received in unsatisfactory condition. The reasons for the rejection will be reported to the sender on the standard laboratory report form. Unsatisfactory conditions include but are not limited to:

Hemolyzed, chylous, or contaminated specimen,
Specimen received beyond the acceptable time for testing,
Specimen taken too soon or too late in the illness for the test requested,
Specimen was stored and shipped at improper temperature,
Specimen is nonviable, or decomposed
Specimen quantity insufficient

Specimens that have some degree of hemolysis, icteric, or chylous, will be tested if the degree of hemolysis or lipemia does not interfere with the examination. The undesirable condition will be indicated on the report form.

RESULTS REPORTING POLICIES

All laboratory reports generated are considered confidential information. The reports will be released only to authorized persons. **Sample Master Result Point:** Reports can be accessed via the internet this allows instant and real access to order and result status. Reports are mailed daily to clients without access to the internet. Clients (Customers) can only view information on orders that have been logged in with their customer ID. **Newborn Screening Results** are mailed daily. Contact the laboratory at 803-896-0800 for more information.

TELEPHONE RESULTS

Panic or Critical Values or Life-Threatening results and/or public health emergencies are telephoned to the appropriate person. A result will not be left on voice mail or an answering machine. A message to call the Bureau of Laboratories for a report will be left.

COPIES OF RESULTS REPORTS

Newborn Screening: One copy is sent to the hospital submitting specimen and one to the physician whose name has been entered on the request form. If no attending physician is listed, two copies are sent

to the hospital. **All other tests**: Reports can be access via the internet. If no access to the internet, one copy is returned to the name entered in the sender section of the request form. We regret that we cannot honor requests for multiple copies. If multiple copies of other test reports are needed, we suggest you photocopy the original report issued.

REMAILING OF RESULTS REPORTS

If a physician or clinic to which the patient has been referred requests a copy of a test result, the report will be reprinted with the original sender number and mailed as requested. If, for some reason, you do not receive a report, you may obtain a copy by calling 803-896-0898 or 803-896-0800.

CORRECTING REPORTING ERRORS

If an error or the possibility of an error is discovered by the laboratory after results have been mailed or accessed via result point, the sender will be notified immediately by telephone. The error will be explained and the correct result given. A corrected hard-copy report will be issued with the comment "Corrected Report".

If an error in reporting is discovered by the sender, the laboratory should be notified immediately. The error will be corrected and a corrected report will be mailed. The corrected report will be printed with the comment "Corrected Report".

DISEASE REPORTING

The Code of Laws of South Carolina (1976) Section 44-29-10: Regulation 61-20 mandates that the Commissioner of DHEC is to publish annually a list of diseases to be reported by physicians and laboratories. This list can be found on the Internet at scdhec.gov/administration/plans-reports.htm.

All communicable disease outbreaks and unusual disease occurrences should be reported so that appropriate control measures can be implemented.

SECTION II

ALPHA LISTING OF TEST INFORMATION

ACANTHAMOEBA CONVENTIONAL PCR & REAL-TIME PCR

Synonyms: Free-living ameba

Test Laboratory: Referred to the CDC Division of Parasitic Diseases and Malaria

Days Test Performed: Forwarded upon request.

Request Form: CDC Specimen Referral Form 50.34 Rev. 9-2002. Requesting laboratories must have a state public health laboratory number to include on this form. Please call 803-896-0805 to obtain a number.

Special Instructions: This test is no longer performed at the SC DHEC Bureau of Laboratories. The test requires CDC approval prior to submission. For additional instructions regarding specimen selection, storage, shipping and test methodology, contact the Clinical Microbiology Laboratory – 803-896-0805.

Specimen &Volume: 1 ml CSF or small piece of tissue (brain, lung, corneal scrapings

Container: Sterile screw-capped tube containing small amount of Page's amoeba saline

Storage/Shipping Temperature: Store and ship overnight at room temperature

Shipping Description: Specimen should be shipped overnight to the CDC by the submitting facility.

Rejection Criteria, specific: Specimen refrigerated or frozen, For universal rejections, See **Section I**

Methodology: PCR

Add. Information: NA

CPT Code: 87181

ACID FAST BACILLI CULTURE (AFB) - See "Mycobacterial Culture"

ADENOVIRUS CULTURE - See " Respiratory Virus Culture"

AEROBE REFERRED FOR IDENTIFICATION - See "Bacterial Isolate for Identification"

AIDS TESTING - See "HIV -1/HIV-2 Serology"

ARBOVIRUS SEROLOGY IgM

Synonyms: Test includes EEE, WEE, SLE, CAL and WNV (West Nile virus)

Test Laboratory: Virology/ Rabies, 803-896-0819

Days Test Performed: Weekly

Request Form: DHEC 1332, Test #117

Special Instructions: Paired specimens are NOT required. See **Venipuncture Procedure, Section III**

Specimen & Volume: 5 ml blood or 2 ml serum

ARBOVIRUS SEROLOGY IgM (Continued)

Container: Red top vacuum tube

Storage/Shipping Temperature: Store and ship at room temperature.

Shipping Description: See **Packing and Shipping Instructions, Section IV**

Rejection Criteria, specific: None. For universal rejections, See **Section I**

Methodology: EIA for West Nile, EEE, LaCrosse, SLE

Add. Information: Titer of < 1:16 is considered negative for arboviruses, <1:400 considered negative for WNV.

CPT Codes: EEE 86652; WEE 86654; SLE 86653; CEE 86651; IgM 86788

BACILLUS ANTHRACIS

Synonyms: Anthrax

Test Laboratory: Special Pathogens, 803-896-0777

Days Test Performed: As needed

Request Form: 1335, Test #520 or 521; Suspect agent "Bacillus anthracis"

Special Instructions: This organism has been designated as a Select Agent (Select Agent Regulation, 42 CFR, 73, Final Rule). Special handling criteria apply. Please contact the laboratory for special instructions at 803-896-0777, 803-767-8118, or 803-896-0773.

Specimen & Volume: Clinical samples, clinical isolates, and environmental samples (submitted by FBI)

Container: See Special Instructions Above

Storage/Shipping Temperature: See Special Instructions Above

Shipping Description: See Special Instructions Above

Rejection Criteria, specific: See Special Instructions Above

Methodology: A variety of sentinel and LRN methods are used to confirm or rule-out bacterial isolates.

Add. Information: NA

CPT Code: NA

BACTERIAL ISOLATE, REFERRED FOR IDENTIFICATION

Synonyms: Aerobe for identification; culture for identification; *Salmonella; Shigella; Shiga-toxin Producing E. coli(STEC); Campylobacter; Neisseria; Haemophilus; Listeria; Streptococcus; ` Staphylococcus; Vibrio*; etc

Test Laboratory: Clinical Microbiology, 803-896-0805

Days Test Performed: Monday – Friday

Request Form: 1335, Test #511

Special Instructions: Consultation required for non-enteric gram negative bacilli, and gram positive cocci and gram positive bacilli that are not reportable organisms or select agents.

Specimen & Volume: Pure aerobic bacterial isolate on an agar slant. Plates may be appropriate in some circumstances. Please consult with the laboratory prior to sending isolates on plated media.

Container: Screw-cap tube containing agar slant that will support growth of isolate

Storage/Shipping Temperature: Store and ship at room temperature.

Shipping Description: See **Packing and Shipping Instructions, Section IV**

BACTERIAL ISOLATE, REFERRED FOR IDENTIFICATION (Continued)

Rejection Criteria, specific: Culture nonviable; culture mixed. For universal rejections, **See Section 1**

Methodology: Conventional bio-chemicals

Add. Information: NA

CPT Code: 87077

BLOOD LEAD -See "Lead, Blood"

BORDETELLA PERTUSSIS CULTURE

Synonyms: *Pertussis*, Whooping cough; *B. pertussis* culture

Test Laboratory: Clinical Microbiology, 803-896-0805

Days Test Performed: Monday - Friday

Request Form: DHEC 1335, Test #510

Special Instructions: Requires prior approval from Clinical Microbiology, 803-896-0803 or 803-896-0800. Please do not ship for weekend delivery. See **Collection Procedure for *Bordetella pertussis* Detection by PCR and Culture, Section III**

Specimen & Volume: Nasopharyngeal swab preferred; Throat swab acceptable.

Container: Regan-Lowe transport tube (Available upon request from Media Section, 803-896-0817)

Storage/Shipping Temperature: Store uninnoculated Regan Lowe Transport tubes in refrigerator**.** Collect specimens Monday-Thursday, Do not collect on Friday. **Ship on cold packs Monday-Thursday, with next day delivery.** Do not ship on Friday.

Shipping Description: See **Packing and Shipping Instruction, Section IV**

Rejection Criteria, specific: Regan-Lowe media not used, media expired, or cotton or calcium alginate swabs used. For universal rejections, See **Section I**

Methodology: Conventional culture methods

Add. Information: NA

CPT Code*:* Culture 87070; Identification 87077

BORDETELLA sp. DNA DETECTION AND IDENTIFICATION BY REAL-TIME PCR

Synonyms*:* *B. pertussis* PCR, Pertussis PCR, "whooping cough"

Test Laboratory: Molecular Microbiology, 803-896-0824

Days Test Performed: Monday-Friday

Request Form: DHEC 1335, Test #115

Special Instructions: All submissions require prior approval from the Molecular Microbiology Section Supervisor (803-896-0824) or the Microbiology Division Director (803-896-0870). For approval, patients must <1 year of age or be apart of a DHEC epidemiological investigation.

Specimen & Volume: Only nasopharyngeal aspirates or nasopharyngeal swabs will be accepted for testing. Specimens should be collected within four weeks of symptom onset and prior to antibiotic therapy. Swabs should be thin, flexible, nasopharyngeal swabs with polyester, rayon, or nylon tips and aluminum or plastic shafts. Do not use cotton, wood, or calcium alginate swabs. A pair of swabs, one for each nare, is considered one sample. Place the swabs or aspirated material in a sterile, dry, leak-

BORDETELLA PERTUSSIS DETECTION BY REAL-TIME PCR (Continued)

proof, screw-capped tube. Do not use transport media. See **Collection Procedure for *Bordetella pertussis* Detection by PCR and Culture, Section III**

Container: A sterile, dry, leak-proof, screw capped tube. Do not use transport media.

Storage/Shipping Temperature: Ship with cold packs. Store in a refrigerator if shipping is delayed. Specimens must be received at the BOL Molecular Section within 72 hours of collection

Shipping Description: See **Packing and Shipping Instructions, Section IV**

Rejection Criteria, specific: Specimens on swabs with cotton tips, calcium alginate tips or wooden shafts; Specimens shipped on transport media; Specimens received >72 hours after collection; Specimens collected >4 weeks from symptom onset; Specimens collected >5 days after the initiation of antibiotic therapy; For universal rejections, See **Section I**

Methodology: Multiplex Real-time PCR

Add. Information: This test is used to detect and differentiate between, *B. pertussis, B. parapertussis,* and *B. holmesii*. Limited cross-reactivity with B. bronchiseptica has been observed with this assay.

CPT Code: 87798

BORDETELLA PERTUSSIS ISOLATE, REFERRED FOR IDENTIFICATION

Synonyms: Pertussis, Whooping cough, Bacterial Isolate referred for identification

Test Laboratory: Clinical Microbiology 803-896-0805

Days Test Performed: Monday – Friday. Please submit isolates before 4:00 pm to ensure same-day setup.

Request Form: DHEC 1335, Test #511

Special Instructions: Please do not ship for weekend delivery.

Container: Screw-capped tube containing Regan Lowe transport medium. Regan Lowe plates are not preferred but acceptable for this organism.

Storage/Shipping Temperature: Store in refrigerator and ship on cold packs. Do not ship with other specimen types.

Shipping Description: Do not ship for weekend delivery. See **Packing and Shipping Instructions Section IV**

Rejection Criteria, specific: culture non-viable; culture mixed. For universal rejections, See **Section I**

Methodology: Culture using conventional biochemicals.

Additional Information: NA

CPT Code: Identification 87077

BOTULISM

Prompt diagnosis and early treatment of botulism are essential to minimize the otherwise great risk of death. State Health Departments and the Center for Disease Control and Prevention (CDC) offer 24-hour diagnostic consultation, epidemic investigation assistance, and laboratory services. Trivalent (ABE) Botulinal Antitoxin is available from the CDC. In order to receive these services, it is necessary to do the following:

BOTULISM (Continued)

1. Contact the DHEC/Bureau of Epidemiology, Disease Control and Surveillance consultant at **(803) 898-0861** (M-F during business hours) or digital pager **(803) 690-3756** (after hours).

2. If appropriate, call the CDC Emergency 24 hour number (**770-488-7100**) to make arrangements for immediate shipment of the antitoxin, when indicated, and for proper shipment of selected clinical specimens and/or food samples for testing.

3. Contact the DHEC Division of Microbiology (**803-896-0870**) or the Special Pathogens Laboratory (803-896-0777) to obtain faxed copy of CDC request form and South Carolina State Laboratory number. Consultation with DHEC Acute Disease Epidemiology is required prior to sending the specimen (803-898-0861 or 888-847-0902 after hours). The CDC also requires State level epidemiology consult prior to testing.

4. Specimens should be shipped directly to the CDC for testing, and should be accompanied by the CDC Specimen Referral Form 50.34.

BRUCELLA

Synonyms: Brucellosis

Test Laboratory: Special Pathogens, 803-896-0777

Days Test Performed: As needed

Request Form: 1335, Test #520 or 521; Suspect agent "Brucella"

Special Instructions: This organism has been designated as a Select Agent (Select Agent Regulation, 42 CFR, 73, Final Rule). Special handling criteria apply. Please contact the laboratory for special instructions at 803-896-0777, 803-767-8118, or 803-896-0773.

Specimen & Volume: Clinical samples, clinical isolates, and environmental samples (submitted by FBI)

Container: See Special Instructions Above

Storage/Shipping Temperature: See Special Instructions Above

Shipping Description: See Special Instructions Above

Rejection Criteria, specific: See Special Instructions Above

Methodology: A variety of sentinel and LRN methods are used to confirm or rule-out bacterial isolates.

Add. Information: NA

CPT Code: NA

BURKHOLDERIA MALLERI

Synonyms: Glanders

Test Laboratory: Special Pathogens, 803-896-0777

Days Test Performed: As needed

Request Form: 1335, Test #520 or 521; Suspect agent "Burkholderia mallei"

Special Instructions: This organism has been designated as a Select Agent (Select Agent Regulation, 42 CFR, 73, Final Rule). Special handling criteria apply. Please contact the laboratory for special instructions at 803-896-0777, 803-767-8118, or 803-896-0773.

Specimen & Volume: Clinical samples, clinical isolates, and environmental samples (submitted by FBI)

BURKHOLDERIA MALLERI (Continued)

Container: See Special Instructions Above

Storage/Shipping Temperature: See Special Instructions Above

Shipping Description: See Special Instructions Above

Rejection Criteria, specific: See Special Instructions Above

Methodology: A variety of sentinel and LRN methods are used to confirm or rule-out bacterial isolates.

Add. Information: NA

CPT Code: NA

BURKHOLDERIA PSEUDOMALLEI

Synonyms: Melioidosis

Test Laboratory: Special Pathogens, 803-896-0777

Days Test Performed: As needed

Request Form: 1335, Test #520 or 521; Suspect agent "Burkholderia pseudomallei"

Special Instructions: This organism has been designated as a Select Agent (Select Agent Regulation, 42 CFR, 73, Final Rule). Special handling criteria apply. Please contact the laboratory for special instructions at 803-896-0777, 803-767-8118, or 803-896-0773.

Specimen & Volume: Clinical samples, clinical isolates, and environmental samples (submitted by FBI)

Container: See Special Instructions Above

Storage/Shipping Temperature: See Special Instructions Above

Shipping Description: See Special Instructions Above

Rejection Criteria, specific: See Special Instructions Above

Methodology: A variety of sentinel and LRN methods are used to confirm or rule-out bacterial isolates.

Add. Information: NA

CPT Code: NA

CAMPYLOBACTER STOOL CULTURE

Campylobacter testing is available for outbreaks as determined by the SC DHEC Division of Acute Disease Epidemiology.

Synonyms: NA

Test Laboratory: Clinical Microbiology 803-896-0805

Days Test Performed: Monday – Friday.

Request Form: DHEC 1335, Test #508 for identification from stool. Test #511 for speciation.

Special Instructions: NA

Container: Screw-capped tube containing Cary Blair transport medium.

Specimen and Volume: Walnut sized portion of feces or 5-10 ml of liquid stool. Infant specimens may be collected in a disposable diaper with outside facing in.

Storage/Shipping Temperature: Store stool preserved in Cary-Blair media in refrigerator. Ship stool preserved in Cary-Blair transport media with cold packs to be received at the lab within 48 hours of collection. Ship raw stool on cold packs for arrival at the laboratory within 2-6 hours.

CAMPYLOBACTER STOOL CULTURE (Continued)

Campylobacter testing is available for outbreaks as determined by the SC DHEC Division of Acute Disease Epidemiology.

Shipping Description: See **Packing and Shipping Instructions Section IV.** May use state courier for overnight delivery.

Rejection Criteria, specific: Quantity insufficient, specimen too old, improper transport media or conditions. For universal rejections, See **Section I**

Methodology: Conventional culture methods. Abbreviated biochemical analysis.

Additional Information: NA

CPT Code: Identification 87046

CBC

Synonyms: Complete Blood Count with Differential

Test Laboratory: Clinical, Hematology Unit – 803-896-0890

Days Test Performed: Monday – Friday

Request Form: DHEC 1332, Test# 760

Special Instructions: Specimen must be less than 24 hours old when tested by laboratory.

Specimen Volume: 3 ml EDTA anticoagulated whole blood (dependent upon whether cells are badly distorted by excess anticoagulant) Mix well by gentle inversion.

Container: Lavender top (EDTA) vacuum tube. See **Venipuncture Procedure, Section III**, if needed.

Storage/Shipping Temperature: Store and ship at room temperature. **Do not refrigerate.**

Shipping Description: See **Packing and Shipping Instructions, Section IV**

Rejection Criteria, specific: Specimens more than 24 hours old upon arrival, specimen clotted, and specimen received cold or frozen. For universal rejections, See **Section I**

Methodology: Automated Cell Counter

Add. Information: NA

CPT Code: 85025

CD4 - See "Lymphocyte Subset"

CHAGAS DISEASE - See "Parasite Serology"

CHIKUNGUNYA IgM Capture ELISA

Synonyms: CHIK IgM Serology

Test Laboratory: Virology/ Rabies, 803-896-0819

Days Test Performed: Weekly

Request Form: DHEC 1332

Special Instructions: Paired specimens are NOT required. See Venipuncture Procedure, Section III

Specimen & Volume: 5 ml blood or 2 ml serum

Container: Red top vacuum tube, Serum Separator

Storage/Shipping Temperature: Store and ship at 2-8°C

Shipping Description: See Packing and Shipping Instructions, Section IV

CHIKUNGUNYA IgM Capture ELISA (Continued)

Rejection Criteria, specific: None. For universal rejections, See Section I

Methodology: IgM Capture ELISA

CPT Codes: 86790

CHLAMYDIA (CT) DETECTION BY NUCLEIC ACID AMPLIFICATION

Synonyms: Gen-Probe, *C. trachomatis* Amplified Nucleic Acid Probe, Chlamydia rRNA, CT Aptima

Test Laboratory: Diagnostic Serology, 803-896-0811

Days Test Performed: Monday-Friday

Request Form: DHEC 1332, Test 506 – CT only, Test 507 – GC and GC.

Special Instructions: Only use Gen-Probe Aptima specimen collection kit (unisex swab, vaginal swab, or urine). Patients under the age of twelve should be tested by culture.

Specimen & Volume: Swab specimen: Endocervical, validated rectal and pharyngeal swab, and/or male urethral Gen-Probe blue-shafted swab in Gen-Probe Aptima Unisex Swab Specimen Collection Kit for Endocervical and Male Urethral Swab Specimens (Blue Label). Vaginal specimens: Use the Gen-Probe Aptima Vaginal Swab Specimen Collection kit (Orange label) for collecting vaginal samples. Vaginal samples collected in the Aptima Unisex Swab Collection kit will be disclaimed as not FDA approved for this type of specimen. Urine specimen: Patient should not have voided within one hour of collection. Collect first 20-30 ml of the first-catch urine stream into collection cup. Transfer 2 ml of urine into Aptima Urine Specimen Transport tube so that the urine level falls within the two lines on the transport tube labeled: "fill area". (Yellow Label). See **GC/Chlamydia Gen-Probe Collection Procedure, Section III**

Container: Gen-Probe Aptima Unisex Swab Specimen Transport kit for endocervical and male urethral swabs; Gen-Probe Aptima Urine Specimen Transport kit for urines; Gen-Probe Aptima Vaginal Swab Specimen Collection kit for vaginal swabs

Storage/Shipping Temperature: Store and ship at room temperature. Swab specimens must be tested within 60 days of collection. Urine specimens within 30 days of collection.

Shipping Description: See **Packing and Shipping Instructions, Section IV**

Rejection Criteria, specific: Specimen with no swab in transport media; white swab in transport media; two swabs in transport media; urine above or below designated black lines on transport tube labeled fill area; swab specimen more than 60 days old, or urine specimen more than 30 days old. For universal rejections, See **Section I**

Methodology: Target amplification Nucleic acid Probe

Add. Information: This test is not appropriate in cases of sexual assault or abuse; patients under the age of twelve should be tested by culture

CPT Code: CT 87491; GC/CT 87491, 87591

CLINICAL CHEMISTRY

Synonyms: Serum Chemistries, TB Panel

Test Laboratory: Clinical, Chemistry Unit, 803-896-0890

Days Test Performed: Monday-Friday

Request Form: DHEC 1332, Test # 715 (TB Panel)

Special Instructions: Chemistry specimens must be less than 4 days old when received for testing. If there will be a delay in mailing the specimen, freeze the serum and send to the lab the next business

CLINICAL CHEMISTRY (Continued)

day on ice/cold packs. Make sure to note on the requisition that the specimen was frozen prior to shipment.

Specimen & Volume: 2-5 ml serum See **Venipuncture Procedure, Section III,** if needed.

Container: Vacutainer tube or SST

Storage/Shipping Temperature: Store refrigerated; ship on cold pack.

Shipping Description: See **Packing and Shipping Instructions, Section IV**

Rejection Criteria, specific: None. For universal rejections, See **Section I**

Methodology: Automated Chemistry analyzer

Add. Information: NA

CPT Code: Must use individual analyte codes.

TB PANEL	CPT CODE
CPT CODE: Use individual analyte codes.	
*Calculated Values have no CPT codes and cannot be billed	
AST (SGOT)	84450
ALT (SGPT)	84460
Total Bilrubin	82247
Phosphatase, Alka.	84075
Uric Acid	84550
BUN	84520
Creatinine	82565
Glucose	82947
BUN/Creatinine Ratio*	NA

CLOSTRIDIUM BOTULINUM – See "Botulism"

COMPLETE BLOOD COUNT- See "CBC"

CONGENITAL ADRENAL HYPERPLASIA - See "Newborn Screening"

CORYNEBACTERIUM DIPHTHERIAE, CULTURE & ID

Notify Clinical Microbiology lab prior to submission. Specimens must be received within 24 hours of collection.

Synonyms: *C. diphtheriae*

Test Laboratory: Clinical Microbiology, 803-896-0805

Days Test Performed: Monday-Friday

Request Form: DHEC 1335, Test #510 (clinical material or swab) or Test #511 (referred isolate)

Special Instructions: Notify Clinical Microbiology lab prior to submission. Specimens must be received within 24 hours of collection.

Specimen & Volume: Throat swab, NP swab, skin; referred isolate; clinical material submitted on Loeffler's slant

CORYNEBACTERIUM DIPHTHERIAE, CULTURE & ID (Continued)

Notify Clinical Microbiology lab prior to submission. Specimens must be received within 24 hours of collection.

Container: Submit swab in transport tube (culturette), submit referred isolate on agar slant in screw capped tube. See **Bacterial Culture Collection, Section III**

Storage/Shipping Temperature: Store and ship at room temperature.

Shipping Description: See **Packing and Shipping Instructions, Section IV**

Rejection Criteria, specific: Specimen must be received within 24 hours of collection unless submitted on Loeffler's medium. Transport swab not used or ampule in transport swab not crushed. For universal rejections, See **Section I**

Methodology: Conventional culture methods

Add. Information: Detection of *Corynebacterium diphtheriae*

CPT Code: Culture 87070; Identification 87077

COXSACKIE VIRUS A & B CULTURE - See "Enterovirus Culture"

CRYPTOSPORIDIUM ANTIGEN

Cryptosporidium antigen testing is available for outbreaks as determined by the SC DHEC Division of Acute Disease Epidemiology.

Synonyms: NA

Test Laboratory: Clinical Microbiology, 803-896-0805

Days Test Performed: Monday - Friday

Request Form: DHEC 1335, Test #406

Special Instructions: None

Specimen & Volume: Walnut sized portion fresh stool or 3 ml of liquid stool, 10% formalin preserved stool, Clary-Blair, C&S, or concentrated stool sediment

Container: Leakproof tube or container

Storage/Shipping Temperature: Store and ship on ice packs.

Shipping Description: See **Packing and Shipping Instructions, Section IV**

Rejection Criteria, specific: Specimen preserved in PVA; improper labeling. For universal rejections, See **Section I**

Methodology: Rapid immunoassay for the qualitative detection of *Cryptosporidium parvum* antigen

Add. Information: To detect the presence of *Cryptosporidium* oocysts

CPT Code: 87272

CYCLOSPORA

Cyclospora testing is available for outbreaks as determined by the SC DHEC Division of Acute Disease Epidemiology.

Synonyms: *C. cayetanensis*

Test Laboratory: Clinical Microbiology, 803-896-0805

Days Test Performed: Monday - Friday

Request Form: DHEC 1335, Test #410

Special Instructions: Write Cyclospora on Other (specify) line

CYCLOSPORA (Continued)

Cyclospora testing is available for outbreaks as determined by the SC DHEC Division of Acute Disease Epidemiology

Specimen & Volume: Walnut sized portion of fresh stool, 3 ml liquid stool, formalin preserved stool, concentrated stool sediment

Container: Transport tube in Enteric Kit with Cary-Blair medium

Storage/Shipping Temperature: Ship on cold packs

Shipping Description: See **Packing and Shipping Instructions, Section IV**

Rejection Criteria, specific: Specimen preserved in PVA. For universal rejections, See **Section I**

Methodology: FilmArray GI panel (PCR)

Add. Information: To detect the presence of cyclospora

CPT Code: 87507

CYSTICERCOSIS - See "Parasite Serology"

CYTOLOGY, PAPS SMEAR - See "PAP Test, Liquid-Based Monolayer"

DENGUE IgM

Synonyms: Dengue IgM Serology

Test Laboratory: Virology/ Rabies, 803-896-0819

Days Test Performed: Weekly

Request Form: DHEC 1332

Special Instructions: Paired specimens are NOT required. See Venipuncture Procedure, Section III

Specimen & Volume: 5 ml blood or 2 ml serum

Container: Red top vacuum tube, Serum Separator

Storage/Shipping Temperature: Store and ship at 2-8°C

Shipping Description: See Packing and Shipping Instructions, Section IV

Rejection Criteria, specific: None. For universal rejections, See Section I

Methodology: IgM Capture ELISA

CPT Codes: 86790

DIPHTHERIA - See "*Corynebacterium diphtheriae*"

EASTERN EQUINE ENCEPHALITIS - See "Arbovirus Serology"

ECHOVIRUS - See "Enterovirus Culture"

E. COLI O157:H7 - See "Enteric Pathogens Culture"

ENCHINOCOCCOSIS - See "Parasite Serology"

ENTERIC GI PANEL by FilmArray (PCR)

Enteric GI Panel by FilmArray (PCR) testing is available for outbreaks (other than suspected Norovirus and Rotavirus outbreaks) as determined by the SC DHEC Division of Acute Disease Epidemiology.

Synonyms: Bacteria: *Campylobacter, Clostridium difficile* toxin A/B, *Plesiomonas shigelloides, Salmonella, Vibrio species, Vibrio cholerae, Yesrsina enterocolytica;* Diarrhegenic *E. coli/Shigella:* Enteroaggregative *E. coli* (EAEC), Enteropathogenic *E. coli* (EPEC), Enterotoxigenic *E. coli* (ETEC) It/st, Shiga-like toxin-producing *E. coli* (STEC) stx1/stx2, *E. coli* 0157, *Shigella/Enteroinvasive E. coli* (EIEC); Parasites: *Cyclospora cayetanensis, Crytosporidium, Entamoeba histolytica, and Giardia lamblia;* Viruses: Adenovirus F 40/41, Astrovirus, and Norovirus GI/GII, Rotavirus A, Sapovirus

Test Laboratory: Clinical Microbiology, 803-896-0805

Days Test Performed: Monday – Friday **Note:** **For same day test results, must receive specimen by noon.**

Request Form: DHEC 1335, Test #508 and (specify)

Special Instructions: Call Clinical Microbiology

Specimen & Volume: Walnut sized portion of feces or 5-10 ml of liquid stool
Infant specimens may be collected in a disposable diaper with plastic side facing inside.

Container: Transport tube in Enteric Kit with Cary-Blair medium

Storage/Shipping Temperature: Ship on cold packs

Shipping Description: See **Packing and Shipping Instructions, Section IV.**

Rejection Criteria, specific: Unpreserved stool and specimen preserved in PVA. For universal rejections, See **Section I**

Methodology: FilmArray GI panel (PCR)

Add. Information: To detect the presence of enteric pathogens other than Norovirus and Rotavirus in a GI outbreak situation.

CPT Code: 87507

ENTERIC PATHOGENS CULTURE

Enteric Pathogens culture testing is available for outbreaks as determined by the SC DHEC Division of Acute Disease Epidemiology. Epidemiology to note on requisition slip which pathogens are suspected.

Synonyms: Fecal culture, stool culture, Enteric culture, *Salmonella* culture, *Shigella* culture, *Campylobacter* culture, *Vibrio* culture , TOXIN culture – for *Staphylococcus aureus, Bacillus cereus,* and *Clostridium perfringens*

Test Laboratory: Clinical Microbiology, 803-896-0805

Days Test Performed: Monday - Friday

Request Form: DHEC 1335, Test #508

Special Instructions: Notify Clinical Microbiology prior to submission of specimens for culture of *Salmonella Typhi*, Toxins, *Vibrio* species or *Yersinia entercolitica* to ensure specialized media is secured. See **Enteric Collection Procedure, Section III**

Specimen & Volume: Walnut sized portion of feces or 5-10 ml of liquid stool
Infant specimens may be collected in a disposable diaper with plastic side facing inside.

Container: Transport tube in Enteric Kit with Cary-Blair medium

Storage/Shipping Temperature: Stools not in medium must be shipped with cold packs to arrive in the laboratory and be inoculated within 24 hours of collection. If specimen is in transport medium, store and ship under refrigeration to be received at the lab within 48 hours of collection.

ENTERIC PATHOGENS CULTURE (Continued)

Enteric Pathogens culture testing is available for outbreaks as determined by the SC DHEC Division of Acute Disease Epidemiology. Epidemiology to note on requisition slip which pathogens are suspected.

Shipping Description: See **Packing and Shipping Instructions, Section IV.** May use state courier for overnight delivery.

Rejection Criteria, specific: Quantity insufficient; specimen too old; improper transport media or conditions. For universal rejections, See **Section I**

Methodology: Conventional culture methods and biochemicals; Serological tests for *Shigella*, *E. coli* BOTH non and 0157, *Vibrio species including cholera* and *Salmonella*; PCR also available (FilmArray GI panel)

Add. Information: NA

CPT Code: *Salmonella* and *Shigella* Culture 87045; all others 87046; ID 87077; PCR 87507

ENTERIC PATHOGENS SUBMITTED by NON-CULTURE INDEPENDENT METHODS (PCR)

Synonyms: Fecal culture, stool culture, Enteric culture, *Salmonella* culture, *Shigella* culture, *E. coli [Shiga-toxin producing (STEC)], E. coli (0157), Vibrio species*

Test Laboratory: Clinical Microbiology, 803-896-0805

Days Test Performed: Monday - Friday

Request Form: DHEC 1335, Test #508

Special Instructions: Isolate all Salmonellas and Shigellas before submission. **Note:** Do not submit Raw Stools or Cary-Blair for isolation of Salmonella or Shigella Organisms. Submit Cary-Blair on cold packs for *Shiga-toxin producing*, *E. coli* and *Vibrio species*. See **Enteric Collection Procedure, Section III**

Specimen & Volume: *Salmonella* and *Shigella* isolates submit on slants

Container: Submit 1 ml minimum in transport medium, such as Cary-Blair. Submit a slant that will support *Salmonella* and *Shigella*, such as TSA, SBAP.

Storage/Shipping Temperature: Ship slants of *Salmonella a*nd *Shigella* at ambient temperature. Ship *Shiga-toxin producing* (E. coli) and *Vibrio species* in Cary-Blair on cold packs to be received in lab within 48 hours.

Shipping Description: See **Packing and Shipping Instructions, Section IV.** May use state courier for overnight delivery.

Rejection Criteria, specific: Quantity insufficient; specimen too old; improper transport media or conditions. For universal rejections, See **Section I**

Methodology: Conventional culture methods and biochemical

Add. Information: NA

CPT Code: *Salmonella* and *Shigella* Culture 87045; all others 87046; ID 87077

ENTEROVIRUS CULTURE

Synonyms: Includes - ECHO, Coxsackie A & B

Test Laboratory: Virology/Rabies, 803-896-0819

Days Test Performed: Monday - Friday

Request Form: DHEC 1335, Test #270

Special Instructions: See **Viral Culture/Respiratory Culture/Herpes Culture Collection Procedure, Section III**

ENTEROVIRUS CULTURE (Continued)

Specimen & Volume: Throat swab, rectal swab, N-P swab, feces, CSF

Container: Dry tube for feces, CSF collection tube, or tube of viral transport media for swab

Storage/Shipping Temperature: Store in refrigerator and ship cold with cold packs within 24-48 hours. If shipping is delayed, freeze specimen and ship on dry ice.

Shipping Description: See **Packing and Shipping Instructions, Section IV**

Rejection Criteria, specific: Specimen too old. For universal rejections, See **Section I**

Methodology: Cell culture

Add. Information: NA

CPT Code: Culture 87252; Identification 87253

EHRLICHIOSIS

Synonyms: NA

Test Laboratory: Referred to Centers for Disease Control and Prevention (CDC) for testing.

Days Test Performed: NA

Request Form: CDC specimen Referral Form 50.34 Rev 8-84

Special Instructions: Please contact Molecular Microbiology Lab prior to sending specimens to CDC for testing at 803-896-0824.

Specimen & Volume: EDTA blood, serum, CSF

Container: Purple top vacuum tube (EDTA), sterile container (CSF), See **Venipuncture Procedure, Section III,** if needed.

Storage/shipping Temperature: NA

Shipping Description: See **Packing and Shipping Instructions, Section IV**

Rejection Criteria, specific: None. For universal rejections, See **Section I**

Methodology: NA

Add. Information: NA

CPT Code: NA

ESCHERICIA COLI – SHIGA-TOXIN PRODUCING

Synonyms: *E. coli* O157:H7, *E.coli* non-O157:H7, STEC

Test Laboratory: Clinical Microbiology 803-896-0805

Days Test Performed: Monday – Friday.

Request Form: DHEC 1335, Test #508 for identification from stool. Test #502 for referred isolates and broths.

Special Instructions: Testing of stools for STEC requires consultation with, and approval by a DHEC Epidemiologist.

Specimen and Volume: Walnut sized portion of feces or 5-10 ml of liquid stool in Cary-Blair transport media (mix and tighten cap to prevent leaking) or raw stool in a clean, leak-proof container. Isolate - agar slant. Enrichment broths testing positive for shiga-toxin are also acceptable.

Container: Transport tube in Enteric Kit with Cary-Blair medium

Storage/Shipping Temperature: Store Cary-Blair in refrigerator, ship stool preserved in Cary-Blair media on cold packs.

ESCHERICIA COLI – SHIGA-TOXIN PRODUCING (Continued)

Ship raw stool on cold packs for arrival at the laboratory within 2 hours of collection. Enrichment broths (GN and MacConkey Broth) should be maintained in the refrigerator and shipped on cold packs as soon as possible to increase the odds of isolating the organism. Referred isolates can be shipped at ambient temperature.

Shipping Description: See **Packing and Shipping Instructions, Section IV**. May use state courier for overnight delivery.

Rejection Criteria, specific: Improper transport media or conditions. For universal rejections, See **Section I**

Methodology: Conventional culture methods, biochemical analysis, and EIA for shiga-toxin.

Additional Information: NA

CPT Code: Culture 87046; ID 87077

FILARIASIS - See "Parasite Serology"

FOODBORNE ILLNESSES (FOOD POISONING)

The Food Laboratory assists in the epidemiological investigation of suspected foodborne illness. A physician with a patient suspected of having a foodborne illness should contact Food Protection in the county health department. The laboratory does not accept samples from individuals.

FRANCISELLA TULARENSIS

Synonyms: Tularemia, rabbit fever, deerfly fever

Test Laboratory: Special Pathogens, 803-896-0777

Days Test Performed: As needed

Request Form: 1335, Test #520 or 521; Suspect agent "Francisella tularemia"

Special Instructions: This organism has been designated as a Select Agent (Select Agent Regulation, 42 CFR, 73, Final Rule). Special handling criteria apply. Please contact the laboratory for special instructions at 803-896-0777, 803-767-8118, or 803-896-0773.

Specimen & Volume: Clinical samples, clinical isolates, and environmental samples (submitted by FBI)

Container: See Special Instructions Above

Storage/Shipping Temperature: See Special Instructions Above

Shipping Description: See Special Instructions Above

Rejection Criteria, specific: See Special Instructions Above

Methodology: A variety of sentinel and LRN methods are used to confirm or rule-out bacterial isolates.

Add. Information: NA

CPT Code: NA

GALACTOSEMIA - See "Newborn Screening Panel"

GC CULTURE - See "Gonococcal Culture"

GEN-PROBE ANTIGEN DETECTION - See "GC and Chlamydia antigen detection"

GERMAN MEASLES - See "Rubella Serology IgG and IgM"

GIARDIA ANTIGEN

Giardia antigen testing is available for outbreaks as determined by the SC DHEC Division of Acute Disease Epidemiology.

Synonyms: NA

Test Laboratory: Clinical Microbiology, 803-896-0805

Days Test Performed: Monday - Friday

Request Form: DHEC 1335, Test #410 Other_____

Special Instructions: Test available only for outbreaks of public health importance as determined by a DHEC Epidemiologist.

Specimen & Volume: 10% formalin, Cary-Blair, C&S, or Stuart's transport media are the preferred media for specimen collection. Fresh (unpreserved) samples are also acceptable

Container: Leakproof tube or container

Storage/Shipping Temperature: Store and ship on cold packs.

Shipping Description: See **Packing and Shipping Instructions, Section IV**

Rejection Criteria, specific: Specimen preserved in PVA; improper labeling. For universal rejections, See **Section I**

Methodology: Rapid immunoassay for the qualitative detection of *Giardia lambia* antigen and to detect the presence of *Cryptosporidium parvum.*

Add. Information: NA

CPT Code: 87329

GI OUTBREAK

GI Outbreak testing is available for outbreaks as determined by the SC DHEC Division of Acute Disease Epidemiology.

Synonyms: Norwalk Virus, Norovirus PCR, Enteric Cuture, Rotavirus

Test Laboratory: Molecular Microbiology, 803-896-0824

Days Test Performed: As needed

Request Form: DHEC 1335, Test #121

Special Instructions: Use of this test is restricted to Epidemiological investigations. This test should be used when a GI outbreak is suspected and multiple etiologies are suspected. Please contact your Regional Epidemiological contact.

Specimen & Volume: Two separate collections are required. See Norovirus Detection by Real-Time PCR and Enteric Pathogens Culture

Container: Two separate collections are required. See Norovirus Detection by Real-Time PCR and Enteric Pathogens Culture

Storage/Shipping Temperature: Store in refrigerator and ship on cold packs.

Shipping Description: See **Packing and Shipping Instructions, Section IV**

Rejection Criteria, specific: Specimen not cold on arrival; Specimen more than 7 days old when received. Quantity insufficient; specimen too old; improper transport media or conditions. For universal rejections, See **Section I**

Methodology: See Norovirus Detection by Real-Time PCR and Enteric Pathogens Culture

Add. Information: When ordering this test panel please write GI Outbreak on the submission form. This panel designates a testing algorithm for GI outbreaks of unknown etiology. This panel includes tests for norovirus rRT-PCR, rotavirus antigen detection, and enteric culture (in

GI OUTBREAK (Continued)

GI Outbreak testing is available for outbreaks as determined by the SC DHEC Division of Acute Disease Epidemiology.

this order). Testing will cease when a positive identification is made. If enteric pathogens other than *Salmonella, E. coli* 0157:H7, or *Shigella* are suspected please specify.

CPT Code: Enteric Culture Pathogens: *Salmonella* and *Shigella* Culture 87045; all others 87046; ID 87077; Norovirus Detection by Real-Time PCR 87798; Rotavirus 86759

GONOCOCCAL (GONORRHEA) CULTURE

Restricted to County Health Departments only

Synonyms: GC culture, *Neisseria gonorrhoeae* culture

Test Laboratory: Clinical Microbiology, 803-896-0805

Days Test Performed: Monday – Wednesday

Request Form: DHEC 1335, Test #501

Special Instructions: Bring transgrow bottle to room temperature before inoculating**:** hold bottle upright and roll swab over entire surface of medium; discard swab. NOTE: Use the state courier for overnight delivery. Do not mail specimens for arrival over a weekend.

Specimen & Volume: See ***N. gonorrhoeae* Collection Procedure, Section III**

Container: Transgrow bottles DO NOT PLACE LABEL ON CLEAR SIDE OF BOTTLE

Storage/Shipping Temperature: If an incubator is available, incubate inoculated transgrow bottle upright at 35° C until shipped, and indicate incubation time on request form.
If an incubator is not available, make sure culture is shipped on the same day as collected. DO NOT REFRIGERATE AFTER INOCULATION. **DO NOT USE EXPIRED MEDIA.**

Shipping Description: See **Packing and Shipping Instructions, Section IV**

Rejection Criteria, specific: Transgrow media not used or media expired; specimen in transit more than 5 days. For universal rejections, See **Section I**

Methodology: Carbohydrate fermentation or enzyme detection

Add. Information: NA

CPT Code: Culture 87070; Identification 87077

GONOCOCCAL (GC) DETECTION NUCLEIC ACID AMPLIFICATION

Synonyms: Gen-Probe *N. gonorrhoeae* Amplified Nucleic Acid Probe, Gonorrhea rRNA, GC Aptima

Test Laboratory: Diagnostic Serology, 803-896-0811

Days Test Performed: Monday-Friday

Request Form: DHEC 1332, Test #505-GC only; Test #507 - GC and Chlamydia

Special Instructions: Only use Gen-Probe Aptima specimen collection kit materials (unisex swab, vaginal, or urine). Patients under the age of twelve should be tested by culture.

Specimen & Volume: Swab specimen: Endocervical, validated rectal and pharyngeal swab, or male urethral Gen-Probe blue-shafted swab in Gen-Probe Aptima Unisex Swab Specimen Collection Kit for Endocervical and Male Urethral Swab specimens (Blue label). Vaginal samples: Use the Gen-Probe Aptima Vaginal Swab Specimen Collection Kit (Orange label) for collecting vaginal samples. Vaginal samples collected in the Aptima Unisex Swab Collection Kit will be disclaimed as not FDA approved for this type of specimen. Urine samples: Patient should not have voided within one hour of collection. Collect first 20-30 ml of the first-catch urine stream into collection cup. Transfer 2 ml of urine into

GONOCOCCAL (GC) DETECTION NUCLEIC ACID AMPLIFICATION (Continued)

Aptima Urine Specimen Transport tube so that the urine level falls within the two lines on the transport tube labeled: "fill area". (Yellow Label). See **GC/Chlamydia Gen-probe Collection Procedure, Section III**

Container: Gen-Probe Aptima Unisex transport kit for endocervical and male urethral swabs. Gen-Probe Aptima Urine specimen transport tubes for urine samples. Gen-Probe Aptima Vaginal Swab Specimen Collection kit for vaginal samples

Storage/Shipping Temperature: Store and ship at room temperature. Swab specimens must be tested within 60 days of collection. Urine specimens within 30 days of collection

Shipping Description: See **Packing and Shipping Instructions, Section IV**

Rejection Criteria, specific: Specimen with no swab in transport media; white swab in transport media; two swabs in transport media; urine above or below designated black lines on transport tube labeled fill area; swab specimen more than 60 days old, or urine specimen more than 30 days old. For universal rejections, See **Section I**

Methodology: Target Amplification Nucleic acid Probe

Add. Information: This test is not appropriate in cases of sexual assault or abuse. Patients under the age of 12 should be tested by culture.

CPT Code: GC 87591; GC/CT 87491, 87591

HAEMOPHILUS INFLUENZAE

Synonyms: NA

Test Laboratory: Clinical Microbiology 803-896-0805

Days Test Performed: Monday – Friday.

Request Form: DHEC 1335, Test #511 (Organism for ID-aerobic/referred isolate). Sterile Sites

Special Instructions: Pure bacterial isolate on agar slant (chocolate agar is preferred).

Specimen and Volume: Pure bacterial isolate on an agar slant that will support the growth of the isolate.

Container: Screw-capped tube, containing agar slant that will support growth of isolate

Storage/Shipping Temperature: Store in a 35°C (CO2) incubator and ship at room temperature.

Shipping Description: See **Packing and Shipping Instructions in Section IV**. May use state courier for overnight delivery.

Rejection Criteria, specific: Culture non-viable; culture mixed. For universal rejections, **See Section I**

Methodology: Conventional culture methods and biochemical analysis.

Additional Information: NA

CPT Code: Culture 87046; ID 87077

HANTAVIRUS SEROLOGY- IgG/IgM

Synonyms: NA

Test Section: CDC

Days Test Performed: Referred to CDC

HANTAVIRUS SEROLOGY- IgG/IgM (Continued)

Request Form: CDC Form
Special Instructions: Call BOL Virology prior to sending, 803-896-0819/803-896-0820
Specimen & Volume: 5 ml whole blood See **Venipuncture Procedure, Section III**, if needed.
Container: Red top vacuum tube
Storage/Shipping Temperature: Store and ship at room temperature.
Shipping Description: See **Packing and Shipping Instructions, Section IV**
Rejection Criteria, specific: None. For universal rejections, See **Section I**
Methodology: EIA
Add. Information: NA
CPT Code: 86790

HEMOGLOBIN (Hb) ELECTROPHORESIS

Synonyms: Sickle Cell screen; Included in newborn screening panel
Test Laboratory: Newborn Screening, 803-896-0874
Days Test Performed: Monday - Friday
Request Form: DHEC 1327 (Newborn); DHEC 1339 (Adult)
Special Instructions: See **Heel-stick Specimen Collection Procedure, Section III**
Specimen & Volume: Blood spots on approved filter paper
Container: Approved filter paper
Storage/Shipping Temperature: Store and ship at room temperature.
Shipping Description: See **Packing and Shipping Instructions, Section IV**
Rejection Criteria, specific: Patient transfused within the last 120 days. For universal rejections, See **Section I**
Methodology: Iso Electric Focusing (IEF); High Performance Liquid Chromatography (HPLC)
Add. Information: NA
CPT Code: 83020

HEMATOLOGY- See "CBC"

HEMOLYTIC ANEMIA - See "Hemoglobin Electrophoresis"

HEPATITIS A SEROLOGY

Synonyms: HAVAB-G; Anti-HAV; HAVAB-IgG; Antibody to Hepatitis HAV-IgG; Anti-HAV, IgG; Antibody to Hepatitis A Virus, IgG; HAVAB-M; HAVAB-IgM; Antibody to HAV-IgM; Anti-HAV, IgM; Antibody to Hepatitis A Virus, IgM
Test Laboratory: Clinical, 803-896-0890
Days Test Performed: Upon request; See Special Instructions.
Request Form: DHEC 1332, Test # 019- Hepatitis A, IgG; Test # 020- IgM Hepatitis A, IgM
Special Instructions: All Hepatitis A outbreak investigations should be reported to the laboratory supervisor (803-896-0891) or Division Director (803-896-9725) prior to shipment of specimens.
Specimen & Volume: 1.0 ml of clotted whole blood or 0.50 ml of serum; See **Venipuncture**

HEPATITIS A SEROLOGY (Continued)

Collection Procedure, Section III, if needed.

Container: Red top vacuum tube or serum-separator tube

Storage/Shipping Temperature: Store refrigerated (2° - 8°C) and ship on ice. Specimen must arrive at lab within 7 days of collection. If shipping is delayed more than 7 days, freeze serum and ship on dry ice. *NOTE: If you have frozen the specimen prior to shipment, please indicate that you have done so on the request form.*

Shipping Description: See **Packing and Shipping Instructions, Section IV**

Rejection Criteria, specific: Improperly stored/shipped or contaminated specimens. "It is acceptable, but not recommended, to ship specimens for Hepatitis screening tests (except HBsAg) at ambient temperature as long as the specimen is received to the lab within **3 days** of collection. Specimens shipped in ambient conditions that are more than 3 days old when received will not be tested and will be exceptioned. A second specimen will need to be collected." For universal rejections, See **Section I**

Methodology: Chemiluminescence

Add. Information: A positive HAV IgG antibody result indicates a past or current HAV infection. A positive HAV IgM antibody indicates an acute HAV infection, one that is usually accompanied by clinical symptoms of acute hepatitis. The clinical symptoms of HAV may precede the laboratory detection of HAV IgM by a few days.

CPT Code: Total 86708; IgM 86709

HEPATITIS B CORE TOTAL ANTIBODY SCREEN

Synonyms: Anti-HBc; Core Antibody; HBcAb, Total; Antibody to Hepatitis B Core Antigen

Test Laboratory: Clinical, 803-896-0890

Days Test Performed: Monday - Friday

Request Form: DHEC 1332, Test #226

Special Instructions: See **Venipuncture Procedure, Section III**, if needed.

Specimen & Volume: 1 ml whole clotted blood, 0.5 ml serum

Container: Red top vacuum tube or serum-separator tube

Storage/Shipping Temperature: Store refrigerated (2° - 8°C) and ship on ice. Specimen must arrive at lab within 7 days of collection. If shipping is delayed more than 7 days, freeze serum and ship on dry ice. *NOTE: If you have frozen the specimen prior to shipment, please indicate that you have done so on the request form.*

Shipping Description: See **Packing and Shipping Instructions, Section IV**

Rejection Criteria, specific: Improperly stored/shipped specimens, grossly hemolyzed and contaminated specimens. "It is acceptable, but not recommended, to ship specimens for Hepatitis screening tests (except HBsAg) at ambient temperature as long as the specimen is received to the lab within **3 days** of collection. Specimens shipped in ambient conditions that are more than 3 days old when received will not be tested and will be exceptioned. A second specimen will need to be collected." For universal rejections, See **Section I**

Methodology: Chemiluminescence

Add. Information: NA

CPT Code: 86704

HEPATITIS B DIAGNOSTIC PROFILE

Synonyms: NA

Test Laboratory: Clinical, 803-896-0890

Days Test Performed: Monday - Friday

Request Form: DHEC 1332, Test #223

Special Instructions: See **Venipuncture Procedure, Section III,** if needed.

Specimen & Volume: 2-5 ml whole clotted blood, or 2 ml serum

Container: Red top vacuum tube or serum-separator tube

Storage/Shipping Temperature: Store refrigerated (2° - 8°C) and ship on ice. Specimen must arrive at lab within **6** days of collection. If shipping is delayed more than **6** days, freeze serum and ship on dry ice. *NOTE: If you have frozen the specimen prior to shipment, please note that you have done so on the request form.*

Shipping Description: See **Packing and Shipping Instructions, Section IV**

Rejection Criteria, specific: Improperly stored/shipped or contaminated specimens. "It is acceptable, but not recommended, to ship specimens for Hepatitis screening tests (except HBsAg) at ambient temperature as long as the specimen is received to the lab within **3 days** of collection. Specimens shipped in ambient conditions that are more than 3 days old when received will not be tested and will be exceptioned. A second specimen will need to be collected." NOTE: "Specimens submitted for HBsAg **MUST** be shipped on ice pack." For universal rejections, See **Section I**

Methodology: Chemiluminescence

Add. Information: Includes tests for HBsAg, anti-HBs, and anti-HBc, and anti-core IgM are performed if indicated.

Interpretations:

HbsAg	anti-HBs	Anti-HBc total antibody	Interpretation
-	-	-	No laboratory evidence of HBV infection. Does not rule-out "low level" HBV carrier state, or the" window" between the disappearance of HBsAg and the appearance of anti-HBs and anti-HBc IgG.
+	-	-	Early acute HBV infection.
+	±	+	HBV infection, either acute or chronic. Differentiate with anti-HBc IgM.
-	+	+	Previous HBV infection and immunity to HBV.
-	+	-	Vaccine-type response indicating immunity to HBV.

CPT Code: Surface Antigen 87340; Surface Antibody 86706; Core Antibody 86704

HEPATITIS B CORE IgM ANTIBODY

Test automatically performed on patients with reactive anti-HBc total antibody in absence of reactive HBsAg or anti-HBs on Diagnostic Profile (test #223) and test automatically performed on patients with reactive Hepatitis B surface antigen on Diagnostic Test Panel #223

Synonyms: Anti-HBc, IgM; HBcAb,IgM; Antibody to Hepatitis B Core Antigen, IgM

Test Laboratory: Clinical, 803-896-0890

Days Test Performed: Available upon request. See special instructions below.

HEPATITIS B CORE IgM ANTIBODY (Continued)

Test automatically performed on patients with reactive anti-HBc total antibody in absence of reactive HBsAg or anti-HBs on Diagnostic Profile (test #223) and test automatically performed on patients with reactive Hepatitis B surface antigen on Diagnostic Test Panel #223

Request Form: DHEC 1332, Test #220

Special Instructions: See **Venipuncture Procedure, Section III**, if needed.

Specimen & Volume: 0.5 ml whole clotted blood or 0.25 ml serum

Container: Red top vacuum tube preferred or serum separator tube

Storage/Shipping Temperature: Store refrigerated (2° - 8°C) and ship on ice. Specimen must arrive at lab within 7 days of collection. If shipping is delayed more than 7 days, freeze serum and ship on dry ice. *NOTE: If you have frozen the specimen prior to shipment, please indicate that you have done so on the request form.*

Shipping Description: See **Packing and Shipping Instructions, Section IV**

Rejection Criteria, specific: Improperly stored/shipped or contaminated specimens. "It is acceptable, but not recommended, to ship specimens for Hepatitis screening tests (except HBsAg) at ambient temperature as long as the specimen is received to the lab within **3 days** of collection. Specimens shipped in ambient conditions that are more than 3 days old when received will not be tested and will be exceptioned. A second specimen will need to be collected." For universal rejections, See **Section I**

Methodology: Chemiluminescence

Add. Information: A positive Anti-HBc IgM result in conjunction with a positive hepatitis B surface antigen result indicates an early acute HBV infection

CPT Code: 86705

HEPATITIS B IMMUNE STATUS/POST-IMMUNIZATION

Synonyms: Anti-HBs and Anti-HBc

Test Laboratory: Clinical, 803-896-0890

Days Test Performed: Monday - Friday

Request Form: DHEC 1332, Test #222

Special Instructions: Tests includes Anti-HBs and Anti-HBc

Specimen &Volume: 2 ml Whole clotted blood, 1 ml serum

Container: Red top vacuum tube or serum separator tube. See **Venipuncture Procedure, Section III**, if needed.

Storage/Shipping Temperature: Store refrigerated (2° - 8°C) and ship on ice. Specimen must arrive at lab within 7 days of collection. If shipping is delayed more than 7 days, freeze serum and ship on dry ice. *NOTE: If you have frozen the specimen prior to shipment, please indicate that you have done so on the request form.*

Shipping Description: See **Packing and Shipping Instructions, Section IV**

Rejection Criteria, specific: Improperly stored/shipped or contaminated specimen. "It is acceptable, but not recommended, to ship specimens for Hepatitis screening tests (except HBsAg) at ambient temperature as long as the specimen is received to the lab within **3 days** of collection. Specimens shipped in ambient conditions that are more than 3 days old when received will not be tested and will be exceptioned. A second specimen will need to be collected." For universal rejections, See **Section I**

HEPATITIS B IMMUNE STATUS/POST-IMMUNIZATION (Continued)

Methodology: Chemiluminescence
Add. Information: NA
CPT Code: Surface antibody 86706; Core antibody 86704

HEPATITIS B SURFACE ANTIBODY

Synonyms: HBsAb; Anti-HBs; Antibody to Hepatitis B Surface Antigen
Test Laboratory: Clinical, 803-896-0890
Days Test Performed: **Monday – Friday**
Request Form: DHEC 1332, Must hand-write test request on form
Special Instructions: None
Specimen & Volume: 2 mL whole clotted blood, or 1 mL of serum
Container: Red top vacuum tube or Serum-separator tube
Storage/Shipping Temperature: Store refrigerated (2° - 8°C) and ship on ice. Specimen must arrive at lab within 7 days of collection. If shipping is delayed more than 7 days, freeze serum and ship on dry ice. *NOTE: If you have frozen the specimen prior to shipment, please indicate that you have done so on the request form.*
Shipping Description: See **Packing and Shipping Instructions, Section IV**
Rejection Criteria, specific: Improperly stored/shipped or contaminated specimens. "It is acceptable, but not recommended, to ship specimens for Hepatitis screening tests (except HBsAg) at ambient temperature as long as the specimen is received to the lab within **3 days** of collection. Specimens shipped in ambient conditions that are more than 3 days old when received will not be tested and will be exceptioned. A second specimen will need to be collected." For universal rejections, **see Section I**
Methodology: Chemiluminescence
Add. Information: NA
CPT Code: 86706

HEPATITIS B SURFACE ANTIGEN

Synonyms: HBsAg; Hepatitis-Associated Antigen
Test Laboratory: Clinical, 803-896-0890
Days Test Performed: Monday – Friday
Request Form: DHEC 1332, Test #225
Special Instructions: None
Specimen & Volume: 2 ml whole clotted blood, or 1 ml serum
Container: Red top vacuum tube or serum separator tube
Storage/Shipping Temperature: Store refrigerated (2° - 8°C) and ship on ice. Specimen must arrive at lab within **6** days of collection. If shipping is delayed more than **6** days, freeze serum and ship on dry ice. *NOTE: If you have frozen the specimen prior to shipment, please note that you have done so on the request form.*
Shipping Description: See **Packing and Shipping Instructions, Section IV**
Rejection Criteria, specific: Improperly stored/shipped or contaminated specimens. "Specimens submitted for HBsAg **MUST** be shipped on ice pack." For universal rejections, See **Section I**

HEPATITIS B SURFACE ANTIGEN (Continued)

Methodology: Chemiluminescence

Add. Information: NA

CPT Code: 87340

HEPATITIS C, TOTAL ANTIBODY

Synonyms: Antibody to Hepatitis C Virus; Anti-HCV

Test Laboratory: Clinical, 803-896-0890

Days Test Performed: Monday-Friday.

Request Form: DHEC 1332, Test #224

Special Instructions: For sites requesting **HCV RNA** if total antibody reactive by EIA, collect blood in a serum separator tube, spin down within 2 hours of collection, and ship cold with cold packs to arrive **within 24 hours** of collection. Label outside of box HCV Viral Load with indelible marker or sticker that cannot easily be removed.

Specimen & Volume: 0.5 ml whole clotted blood, or 0.250 ml serum

Container: Serum separator tube or red top vacuum tube See **Blood Collection Procedure for HCV, Section III**

Storage/Shipping Temperature: Store refrigerated (2° - 8°C) and ship on ice. Specimen must arrive at lab within 7 days of collection. If shipping is delayed more than 7 days, freeze serum and ship on dry ice. *NOTE: If you have frozen the specimen prior to shipment, please indicate that you have done so on the request form.*

Shipping Description: See **Packing and Shipping Instructions, Section IV**

Rejection Criteria, specific: Specimen > 7 days old when received (Test #224 only). "It is acceptable, but not recommended, to ship specimens for Hepatitis screening tests (except HBsAg) at ambient temperature as long as the specimen is received to the lab within **3 days** of collection. Specimens shipped in ambient conditions that are more than 3 days old when received will not be tested and will be exceptioned. A second specimen will need to be collected." For universal rejections, See **Section I**

Methodology: Chemiluminescence

Add. Information: Interpretation: Positive HCV Total Antibody results will be confirmed using the HCV Viral Load test as long as the **Special Instructions** listed above are followed.

CPT Code: 86803

HEPATITIS C, QUANTITATION BY PCR (RNA)

Synonyms: HCV Viral Load test

Test Laboratory: Diagnostic Serology, 803-896-0811

Days Test Performed: Bi-Weekly

Request form: DHEC 1332, Test #227

Special Instructions: Specimen must be centrifuged within 4 hours of collection

Specimen & Volume: Minimum 2 ml serum; use serum separator tube and collect a full 6 ml of blood. See **Blood Collection Procedure for HCV, Section III**

Container: Serum separator tube

HEPATITIS C, QUANTITATION BY PCR (RNA) (Continued)

Storage/Shipping Temperature: Transport on cold packs in a container with return mailing address and the word **HCV** printed on the outside of the container; use enough cold packs to maintain a temperature between 2°-8 °C during transport. **Specimen must arrive at the laboratory within 24 hours of collection. Do not collect or ship samples on Friday or the day before a holiday.**

Shipping Description: Infectious substance See **Packing and Shipping Instructions, Section IV**

Rejection Criteria, specific: Serum separator tube not used, not cold on arrival. For universal rejections, See **Section I**

Methodology: Reverse transcription-polymerase chain reaction (RT-PCR)

Add. Information: The measurable reportable range for this procedure is 12-100,000,000 IU/mL and 1.08-8.0 log 10; Specimens testing within this range will be reported as the measured IU/mL value and the log 10 value of the measured IU/mL value e.g. 30,000 IU/mL and 4.48 log 10. Specimens testing above 100,000,000 will be reported as > 100,000,000 IU/ mL and >8.0 log 10. Specimens testing less than 12 IU/mL and less than 1.08 log 10 will be reported as less than 12 IU/mL and less than 1.08 log 10. Specimens with None Detected will be reported as None Detected.

CPT Code*:* 87522

HERPES SIMPLEX CULTURE

Synonyms: Herpes Virus Culture

Test Laboratory: Virology/Rabies, 803-896-0819

Days Test Performed: Monday - Friday

Request Form: DHEC 1335, Test #250

Special Instructions: DO NOT freeze specimen at -20 ºC. See **Viral Culture/Respiratory Culture/Herpes Culture Collection Procedure, Section III**

Specimen & Volume: Throat swab, NP swab, Cervical/vaginal swabs, Surface lesions or Tissue (small piece of fresh, unfixed); CSF

Container: Viral transport media (available upon request)

Storage/Shipping Temperature: Store in refrigerator and ship cold or at room temperature.

Shipping Description: See **Packing and Shipping Instructions, Section IV**

Rejection Criteria, specific: Calcium alginate swab used. For universal rejections, See **Section I**

Methodology: Virus ID by Enzyme linked Virus Inducible System

Add. Information: NA

CPT Code: Screen 87255; Identification 87140

Hg, Pb, Cd SCREEN IN BLOOD

Synonyms: NA

Test Laboratory: Analytical Chemistry, 803-896-0886

Days Test Performed: Twice per week

Request Form: DHEC 1332, Test #882

Special Instructions: None

Specimen & Volume: Minimum 2 mL EDTA whole blood from venipuncture

Container: Purple/lavender top EDTA tube

Hg, Pb, Cd SCREEN IN BLOOD (Continued)

Storage/Shipping Temperature: Store and ship on cold packs at 4°C. Refrigerate specimen at 4ºC if shipping is delayed.

Shipping Description: See **Packaging and Shipping Instructions, Section IV.**

Rejection Criteria, Specific: Clotted blood, insufficient quantity (QNS). For universal rejections, See **Section I**.

Methodology: Inductively Coupled Plasma Mass Spectrometry

Add. Information: ≥5µg/dL is considered elevated in children less than 6 years of age. Action levels for blood lead in children and adults print on result reports. There are no established action levels for mercury or cadmium. The CDC currently recommends using the 95% upper limit from the NHANES study as action levels for mercury and cadmium.

CPT Code: Mercury 83015; Lead 83655; Cadmium 82300

HIV-1 PCR QUANTITATIVE (RNA)

Synonyms: HIV-1 Viral Load test

Test Laboratory: Diagnostic Serology, 803-896-0811

Days Test Performed: Bi-Weekly

Request Form: DHEC 1332, Test #231

Special Instructions: Label outside of container as HIV (VIRAL LOAD). **Make sure label will not come off.**

Specimen & Volume: Minimum 2.0 mL EDTA anticoagulated plasma, See **Venipuncture Procedure, Section III**, if needed. If using EDTA vacutainer, separate the plasma from the packed cells within 2 hours of collection by centrifugation for 20 minutes at room temperature. Remove the plasma from the cells using a sterile transfer pipette to a sterile polypropylene transport tube. **Note:** Remove as much of the plasma from the cells as possible without aspirating cells **The assay requires 1.0 ml of plasma**. The PPT separator tube can be shipped after centrifugation without transferring plasma to another tube. Invert tube after centrifugation to insure complete separation of cells from plasma. If cells present in plasma, re-centrifuge before shipping.

Container: PPT vacutainer (supplied by the Bureau of Laboratories call 803-896-0913 to order) or polypropylene tube to which plasma cells have been transferred from the Lavender top (EDTA) vacuum tube or K2 EDTA with gel separator

Storage/Shipping Temperature: Transport on cold packs in a container with return mailing address and the word **HIV-1** printed on the outside of the container; use enough cold packs to maintain a temperature between 2°-8 °C during transport. **Specimen must arrive at the Laboratory within 24 hours after collection. Do not collect or ship samples on Friday or the day before a holiday.**

Shipping Description: Infectious substance See **Packing and Shipping Instructions, Section IV**

Rejection Criteria, specific: Whole clotted blood. For universal rejections, See **Section I**

Methodology: Reverse transcription-polymerase chain reaction (RT-PCR)

Add. Information: Therapeutic monitoring of HIV infection

Interpretation: The measurable reportable range for this procedure is 40-10,000,000 copies/ml and 1.6-7.0 log 10; Specimens testing within this range will be reported as the measured copy value and the log 10 value of the measured copy value e.g. 30,000 copies/mL and 4.48 log 10. Specimens testing above 10,000,000 will be reported as > 10,000,000 copies/ ml and >7.0 log 10 . Specimens testing less than 40 copies/ml and less than 1.6 log 10 will be reported as less than 40 copies/ml and less than 1.6 log 10. Specimens with None Detected will be reported as None Detected.

CPT Code: 87536

HIV-1/HIV-2 SEROLOGY

Synonyms: HIV-1/HIV-2 antibody, HIV-1, HIV-2 antibodies, HIV-1 antigen

Test Laboratory: Diagnostic Serology, 803-896-0811

Days Test Performed: Monday – Friday

Request Form: DHEC 1332, Test #230 HIV-1/HIV-2(Screen only), Test #234 HIV-1/HIV-2 and Multispot, Test # 235 HIV-1/HIV-2 and STS (Reagin)

Special Instructions: None

Specimen & Volume: 1 ml serum or plasma

Container: Red top vacuum tube. See **Venipuncture Procedure**, **Section III**, if needed.

Storage/Shipping Temperature: Store and ship at room temperature; refrigerate and ship cold if more than 24 hours. Specimen must arrive at laboratory within 5 days of collection. If shipping is delayed more than 5 days, freeze serum at -20° C and ship on dry ice.

Shipping Description: See **Packing and Shipping Instructions, Section IV**

Rejection Criteria, specific: None. For universal rejections, See **Section I**

Methodology: Chemiluminescent Microparticle Immunoassay (CMIA), Multispot, and STS Reagin for Syphilis

Add. Information: Interpretation: Repeat reactive specimens are confirmed by Multispot; Recommend repeat testing on all first-time positive patient results including CD4 and Viral load (HIV-1 RNA)

CPT Code: EIA 87389; Multispot 86689; RPR 86592

HIV-1 SEROLOGICAL MONITORING- See "Lymphocyte Subset"

HUMAN METAPNEUMOVIRUS (hMPV)- See "Respiratory Viral Culture"

HYPOTHYROIDISM - See "Newborn Screening" for neonatal

INFLUENZA A: H5N1 (asian clave)

Synonyms: Avian Flu

Test Laboratory: Special Pathogens, 803-896-0777

Days Test Performed: As needed

Request Form: 1335, Test #521; Suspect agent "Influenza A:H5N1"

Special Instructions: This organism has been designated as a Select Agent (Select Agent Regulation, 42 CFR, 73, Final Rule). Special handling criteria apply. Please contact the laboratory for special instructions at 803-896-0777, 803-767-8118, or 803-896-0773.

Specimen & Volume: Clinical samples, clinical isolates

Container: See Special Instructions Above

Storage/Shipping Temperature: See Special Instructions Above

Shipping Description: See Special Instructions Above

Rejection Criteria, specific: See Special Instructions Above

Methodology: Real Time RT-PCR

Add. Information: NA

CPT Code: NA

INFLUENZA DETECTION BY REAL-TIME RT-PCR

Synonyms: Influenza Surveillance, Influenza Isolation, Influenza Detection

Test Laboratory: Virology & Rabies, 803-896-0819/803-896-0820

Days Test Performed: Monday-Friday

Request Form: DHEC 1335, Test #271

Special Instructions: Year round the Bureau of Laboratories participates in the World Health Organization's (WHO) Influenza Surveillance Program. Collection kits are provided. Please contact the Virology laboratory for more information at 803-896-0819/803-896-0820. If Influenza A/H5N1, A/H7, or a newly emerging highly pathogenic human influenza strain is suspected, please contact your regional public health office for consultation. Contact information for the regional public health offices are located on the back of the South Carolina List of Reportable Diseases. Upon testing approval, please contact the DHEC Bureau of laboratories at 803-896-0777 or 803-896-8118 for specimen collection, storage and transportation. Testing for A/H5N1, A/H7, and for newly emerging highly pathogenic influenza strains is provided by the Special Pathogens Laboratory.

Specimen & Volume: Nasophargyngeal swabs (NPS), nasal aspirates (NA), nasal washes (NW), dual nasopharyngeal/throat swabs (NP/TS), throat swabs (TS), bronchoalaveolar lavage (BAL), bronchial wash (BW), tracheal aspirate (TA), and sputum (SPT) placed in 2-3 mL viral transport media.

Container: Screw-capped tube of viral transport media

Storage/Shipping Temperature: Store in refrigerator (2-8°C) and ship with cold packs within 72 hours of collection, or if longer, freeze samples at -70°C before shipping.

Shipping Description: Send to the attention of the Virology & Rabies laboratory. See **Packing and Shipping Instructions, Section IV**

Rejection Criteria: Specimens received on calcium alginate swabs, cotton swabs, or swabs with wooden shafts; specimens received >72 hours after collection. For universal rejections, See **Section I.**

Methodology: Real-time reverse transcription polymerase chain reaction (real-time RT-PCR)

Additional Information: Influenza testing also includes a full-respiratory viral panel to identity other respiratory viral pathogens.

CPT Code: NA

LEAD, BLOOD

Synonyms: Blood Lead

Test Laboratory: Analytical Chemistry, 803-896-0886

Days Test Performed: Twice per week

Request Form: DHEC 1332, Test #852

Special Instructions: None

Specimen & Volume: 500 µl EDTA whole blood from finger stick or heel stick for screening; Venipuncture preferred for confirmation of an elevated level; Minimum acceptable volume is 2 ml EDTA whole from venipuncture; 500 µL for finger stick or heel stick See **Blood Lead Collection Procedures, Section III**

Container: Purple/lavender top vacuum tube, or purple/lavender Microtainer for finger or heel stick

Storage/Shipping Temperature: Store and ship at room temperature. Refrigerate specimen at 4ºC if shipping is delayed.

Shipping Description: See **Packing and Shipping Instructions, Section IV**

Rejection Criteria, specific: Clotted blood, insufficient quantity (QNS). For universal rejections, See **Section I**

LEAD, BLOOD (Continued)

Methodology: Inductively Coupled Plasma Mass Spectrometry

Add. Information: ≥5µg/dL is considered elevated in children less than 6 years of age. Action levels for blood lead in children and adults are printed on results report. Screening (fingerstick) levels ≥5µg/dL require venipuncture confirmation.

CPT Code: 83655

LEGIONELLA CULTURE

Test available only for SC DHEC Division of Acute Disease Epidemiology

Synonyms: Legionnaire's disease

Test Laboratory: Clinical Microbiology, 803-896-0805

Days Test Performed: Monday – Friday (before 4:00 pm)

Request Form: DHEC 1335, Test #510

Special Instructions: Specimens must be received in the laboratory before 4:00 pm. Test available only for outbreaks of Public Health importance as determine by a DHEC Epidemiologist.

Specimen & Volume: 1-2 ml Sputum, Bronchial washing, pleural fluid, or other body fluids; lung tissue; bacterial isolate

Container: Sterile leak-proof container

Storage/Shipping Temperature: Store in refrigerator and ship cold with cold packs. Specimen must arrive at laboratory within 48 hours of collection. If shipping is delayed for more than 48 hours, freeze at -20 C and ship on dry ice. **Do not ship for arrival over the weekend.**

Shipping Description: Isolate is considered Infectious substance See **Packing and Shipping Instructions, Section IV**

Rejection Criteria, specific: Improper transport media or conditions. For universal rejections, See **Section I**

Methodology: Conventional culture methods and biochemical analysis

Add. Information: NA

CPT Code: Culture 87070 ; Identification 87077

LEGIONELLA FA

Synonyms : NA

Test Laboratory: Clinical Microbiology, 803-896-0805

Days Test Performed: Monday - Thursday

Request Form: DHEC 1335, Test #513

Special Instructions: FA test is screening only; culture is recommended; test #510 will be performed on all specimens for FA that is appropriate for culture.

Specimen & Volume: Fresh lung tissue imprints; scrapings of formalin fixed tissue or lower respiratory tract fluids/sputum; TTA; bronchial washings; pleural fluid; smears on slides(submit at least 2 separate slides), or culture isolate.

Container: Sterile, leak-proof container; crush-proof slide holder; or screw-cap tube containing agar medium that will support growth of isolate.

Storage/Shipping Temperature: Store and ship at room temperature.

Shipping Description: See **Packing and Shipping Instructions, Section IV**

LEGIONELLA FA (Continued)

Rejection Criteria, specific: None. For universal rejections, See **Section I**

Methodology: FA Stain

Add. Information: NA

CPT Code: 87206

LEGIONELLA URINARY ANTIGEN TEST

Test available only for Division of Acute Disease Epidemiology (DADE)

Synonyms: Lateral-flow immunoassay for Legionella pneumophila serogroup 1 antigen in human urine specimens

Test Laboratory: Clinical Microbiology, 803-896-0805

Days Test Performed: Monday-Friday

Request Form: DHEC 1335, Test Other_____(specify)

Special Instructions: Human Urine samples, Unpreserved: Samples should be received in an airtight transport container and stored at 2-8°C. Samples should be tested as soon as possible, but may be held up to seven days at 2-8°C. Test available only for outbreaks of Public Health importance as determined by a DHEC Epidemiologist.

Specimen & Volume: 1 ml or > of Urine collected in either airtight transport container or airtight Boric Acid Urine Tube

Container: Leak-proof container

Storage/Shipping Temperature: Store in refrigerator and ship cold with cold packs.

Shipping Description: Urine is considered Infectious substance. See **Packing and Shipping Instructions, Section IV**

Rejection Criteria, specific: Improper transport media or conditions. For universal rejections, See **Section I**

Methodology: Rapid, lateral-flow immunoassay for the qualitative detection of *Legionella pneumophila* serogroup 1 antigen in human urine specimens. It is designed to test specimens from patients with symptoms of pneumonia. Test results are to be used as an aid in diagnosis of *Legionella pneumophila* serogroup 1 infection. A negative result does not preclude infection with *Legionella pneumophila* serogroup 1. Test results are to be used in conjunction with information obtained from patient's clinical evaluation and other diagnostic procedures.

Add. Information: NA

CPT Code: 87449

LEISHMANIASIS - See "Parasite Serology"

LEPTOSPIROSIS CULTURE

Synonyms: NA

Test Laboratory: CDC Leptospira, 404-639-3905

Days Test Performed: Referred to CDC

Request Form: CDC Form

Special Instructions: Blood specimens should be collected during the first week of symptoms. After the first week of symptoms, collect a mid-stream, clean catch urine specimen. Five (5) tubes of PLM media should be requested from CDC prior to sample collection.

LEPTOSPIROSIS CULTURE (Continued)

Specimen & Volume: 1 ml of heparinized blood or clean catch urine; Collect urine in clean container; Inoculate immediately; put two (2) drops of blood or urine in each tube of medium; Avoid agitation of the blood sample because free hemoglobin kills Leptospira

Container: Screw capped tubes of PLM media

Storage/Shipping Temperature: Store and ship at room temperature.

Shipping Description: See **Packing and Shipping Instructions, Section IV**

Rejection Criteria, specific: Blood specimen collected after first week of illness; specimen not inoculated into PLM media prior to transport. For universal rejections, See **Section I**

Methodology: Conventional culture

Add. Information: Serology test is more sensitive and has a shorter turnaround time.

CPT Code: Blood culture 87040; Urine culture 87088; Identification 87077

LISTERIA SPECIES

Synonyms: NA

Test Laboratory: Clinical Microbiology 803-896-0805

Days Test Performed: Monday – Friday.

Request Form: DHEC 1335, Test #511 (Organism for ID-aerobic/referred isolate)

Special Instructions: None

Specimen and Volume: Pure bacterial isolate on an agar slant that will support the growth of the isolate.

Container: Screw-capped tube containing agar slant that will support growth of isolate

Storage/Shipping Temperature: Store and ship at room temperature.

Shipping Description: See **Packing and Shipping Instructions in Section IV**. May use state courier for overnight delivery.

Rejection Criteria, specific: Culture non-viable; culture mixed. For universal rejections, See **Section I**

Methodology: Conventional culture methods and biochemical analysis.

Additional Information: NA

CPT Code: Identification 87077

LYMPHOCYTE SUBSET

Synonyms: CD4; T4 lymphocytes

Test Laboratory: Clinical, Hematology unit, 803-896-0890

Days Test Performed: Monday – Friday; Specimen must be delivered to the laboratory by 1 PM on Fridays and any day prior to a recognized state-celebrated holiday.

Request Form: DHEC 1332, Test #780

Special Instructions: Specimen must be less than 24 hours old when tested by laboratory; Specimen must be delivered to the laboratory by 1 PM on Fridays and any day prior to a recognized state-celebrated holiday.

Specimen &Volume: 5-7 ml EDTA anticoagulated whole blood mix well but gently

Container: Lavender top (EDTA) vacuum tube See **Venipuncture Procedure, Section III**, if needed.

LYMPHOCYTE SUBSET (Continued)

Storage/Shipping Temperature: Store and ship at room temperature. **Do not refrigerate.**

Shipping Description: See **Packing and Shipping Instructions, Section IV**

Rejection Criteria, specific: Specimen more than 24 hours old upon arrival; specimen clotted; Specimen received cold or frozen. For universal rejections, See **Section I**

Methodology: Laser Flow cytometry

Add. Information: Used To evaluate HIV status

Reference value: CD4 cells 34-59%, CD4/CD8 ratio 0.9-3.1, results highly variable during progression of disease NOTE: Lymphocyte subset includes CBC results.

CPT Code: CD4/CD8 profile 86360; CBC 85025

MALARIA SMEAR

Synonyms: Giemsa stain; Blood parasite

Test Laboratory: Testing is no longer performed at the SC DHEC Bureau of Laboratories. The malaria and diagnostic parasitology laboratories at CDC since June 2012 will be offering malaria species confirmation and malaria drug resistance testing services for cases of malaria diagnosed and treated in the United States. These tests will be provided free of charge. Service will include PCR-confirmation of the species, identification of drug resistance mutations, and when possible, parasite culture for direct susceptibility testing.

Special Instructions: The CDC requests that you please send a pre-treatment whole blood sample (EDTA) to CDC along with the electronic specimen submission form. For form and instructions go to http://www.cdc.gov/malaria/features/ars.html.

Specimen & Volume: Blood Smears: Send stained or unstained pretreatment slides (if unstained, fix thin smears in methanol as soon as possible after making the smear). Place slides in protective shipping holders to prevent breakage. If you with the slides to be returned, please indicate that on the CDC Electronic Submission form. **Blood for PCR or culture**: Draw pretreatment whole blood in 3 or 5ml EDTA or ACD blood tubes. **Serum for serology**: Draw 3 to 5ml blood in a clot or serum separator tube. Centrifuge and transfer serum into a shipping vial.

Container: EDTA Tube or ACD blood tubes and Slides

Storage/Shipping Temperature: For whole blood specimens<72 hours old, ship on cold packs as a "Clinical Specimen" by overnight carrier. For all other specimens, Store and ship at room temperature as a "Clinical Specimen" by overnight carrier.
All specimens should be shipped to CDC ATTN: DASH/Unit 52, 1600 Clinton Road, Atlanta, GA 30333.

Shipping Description: Ship Monday-Friday delivery ONLY. Packages cannot be accepted on weekends or on federal holidays. If you have questions about submitting specimens, contact DPDx at dpdx@cdc.gov or call 404-718-4110. Send the pre-treatment whole blood sample (EDTA) to CDC along with the electronic specimen submission form.
The specimen submission form and the instructions for shipping specimens can be found on this website: http://www.cdc.gov/malaria/features/ars.html. Specimens may be shipped overnight by the submitting facility.

Rejection Criteria, specific: Smears made from EDTA blood> 1 hour old; blood smears > 3 days old; For universal rejections, See **Section I**

Methodology: Microscopic examination of Giemsa stained smear

MALARIA SMEAR (Continued)

Add. Information: Used to detect blood parasites such as**:** malaria, microfilaria
Health care providers needing assistance with diagnosis or management of suspected cases of malaria should call the CDC Malaria Hotline: 770-488-7788 or 855-856-4713 toll-free (M-F, 9am-5pm, Eastern time). Emergency consultation after hours, call 770-488-7100 and request to speak with a CDC Malaria Branch clinician.

CPT Code: 87207

MCADD (Medium chain Acyl Co-A Dehydrogenase Deficiency) - See "Newborn Screening Panel"

MEASLES (RUBEOLA) RNA DETECTION BY REAL-TIME RT-PCR

Synonyms: Measles (rubeola) PCR, RT-PCR, or rRT-PCR

Test Laboratory: Molecular Microbiology, 803-896-0824

Days Test Performed: Monday-Friday, weekend and holiday testing approved on a case by case basis by the Microbiology Division Director only.

Request Form: DHEC 1335, Other, Specify "Measles PCR" in the Molecular Test Section

Special Instructions: All submissions require prior approval from Virology Section Supervisor (803-896-0819), the Microbiology Division Director (803-896-0870), or designee.

Specimen & Volume: Only throat swabs or nasopharyngeal swabs will be accepted. Ideally, samples should be collected within three days of symptom onset, however; samples collected up to fourteen days from symptom onset will be accepted. Use swabs with synthetic (polyester, nylon, etc) tips and aluminum or plastic shafts. DO NOT USE cotton, wood, or calcium alginate swabs. Place the swab in viral transport media for storage and shipment.

Container: A sterile, leak-proof, screw-capped tube containing viral transport media.

Storage/Shipping Temperature: Store in refrigerator; ship cold with cold packs. Specimen must be received at the BOL Virology Section within 48 hours of collection. If transport is delayed, freeze at $\leq$ -70°C and ship on dry ice.

Shipping Description: See **Packing and Shipping Instructions, Section IV**

Rejection Criteria, specific: Sample types other than throat or nasopharyngeal swabs; Swabs with cotton tips, calcium alginate tips, or wooden shafts; Specimens collected >14 days after symptom onset; Specimens shipped without transport media; Non-frozen specimens received >48 hours after collection. For universal rejections, See **Section I**

Methodology: Real-time RT-PCR

Add. Information: This test is used to detect the presence of measles (rubeola) virus nucleic acid (RNA). This test will not detect the German measles (rubella).

CPT Code: 87798

MEASLES SEROLOGY See "Rubeola Serology – IgM & IgG"

MHA-TP - See "TP-PA"

MITES - See "Scabies"

MUMPS RNA DETECTION BY REAL-TIME RT-PCR

Synonyms: Mumps PCR, Mumps RT-PCR

Test Laboratory: Molecular Microbiology, 803-896-0824

Days Test Performed: Monday – Friday, weekend and holiday testing approved on a case by case basis by the Microbiology Division Director only.

Request Form: DHEC 1335, Other Specify "Mumps PCR" in Molecular Section

Special Instructions: All submissions require prior approval from Virology Section Supervisor 803- 896-0819 or the Microbiology Division Director 803-896-0870, or designee. Only specimens submitted as apart of an epidemiological investigation will be accepted.

Specimen & Volume: One buccal swab collected within 14 days of symptom onset. Ideal collections occur within 3 days of symptom onset. Use swabs with polyester or nylon tips and aluminum or plastic shafts. DO NOT USE cotton, wood, or calcium alginate swabs. Place swab in viral transport media for storage and shipment. See **Collection Procedure for Mumps Virus (Buccal Swab), Section III**.

Container: A sterile, leak-proof, screw capped tube containing viral transport media.

Storage/Shipping Temperature: Store in refrigerator; ship with cold packs. Specimen must be received at the BOL within **48** hours of collection. If transport is delayed, freeze at -70°C and ship on dry ice.

Shipping Description: See **Packing and Shipping Instructions, Section IV**

Rejection Criteria, specific: Cotton or alginate swabs or swabs with wooden shaft; Specimens collected greater than 14 days after symptom onset; Specimens shipped without transport media; non-frozen specimens received >**48** hours after collection. For universal rejections, See **Section I**

Methodology: Real-time reverse transcriptase polymerase chain reaction.

Add. Information: This test is used to detect the presence of mumps virus nucleic acid (RNA).

CPT Code: 87798

MUMPS VIRUS CULTURE

Synonyms: Mumps Isolation

Test Laboratory: Virology/Rabies, 803-896-0819

Days Test Performed: Monday - Friday

Request Form: DHEC 1335, Test #273

Special Instructions: None

Specimen & Volume: See **Viral Culture/Respiratory Culture/Herpes Culture Collection Procedure, Section III**

Container: Screw capped tube of viral transport media (available upon request) for buccal. No transport media needed for urine or CSF – use sterile leakproof container.

Storage/Shipping Temperature: Store in refrigerator. Ship with cold packs. If shipping is delayed more than 48 hours, freeze at -70 C and ship on dry ice.

Shipping Description: See **Packing and Shipping Instructions, Section IV**

Rejection Criteria, specific: Use of calcium alginate swab for buccal specimen; specimen not cold on arrival. For Universal rejections, See **Section I**

Methodology: Cell Culture

Add. Information: NA

CPT Code: Culture 87252; Identification 87253

MUMPS VIRUS SEROLOGY IgG and IgM

Synonyms: Parotitis Epidemica Antibodies
Test Laboratory: Virology/Rabies, 803-896-0819
Days Test Performed: Mumps IgG once/week, Mumps IgM as needed
Request Form: DHEC 1332, Test #135 Mumps IgG (single specimen) Test #136 Mumps IgM
Special Instructions: None
Specimen & Volume: 2 ml whole clotted blood or 1 ml serum See **Venipuncture procedure, Section III**, if needed
Container: Red top vacuum tube
Storage/Shipping Temperature: Store and ship at room temperature.
Shipping Description: See **Packing and Shipping Instructions, Section IV**
Rejection Criteria, specific: None. For universal rejections, See **Section I**
Methodology: EIA for Mumps IgG, IFA for Mumps IgM
Add. Information: Mumps IgG Immune status reported as positive, negative or equivocal, Mumps IgM reported as positive or negative.
CPT Code: 86735

MYCOBACTERIAL CULTURE, BLOOD

Synonyms: TB, AFB
Test Laboratory: Mycobacteriology (TB), 803-896-0828
Days Test Performed: Monday-Friday
Request Form: DHEC 1335, Test #601
Special Instructions: Use Bactec 13A Vial (1) Clean septum of 13A vial with 70% alcohol; (2) Use good aseptic technique to cleanse arm; (3) Aseptically draw 4 to 5 ml blood and inject into 13A vial (4) Clean top of vial with 70% alcohol, cover top with tape and mail in mailer provided
Specimen & Volume: 4-5 ml whole Blood See **Venipuncture Procedure, Section III**, if needed.
Container: Bactec 13A Vial (call Lab for container, 896-0828)
Storage/Shipping Temperature: Store and ship at room temperature. Incubate at 37 º C if shipping is delayed over 24 hours.
Shipping Description: See **Packing and Shipping Instructions, Section IV**
Rejection Criteria, specific: Specimen >5 day old. For universal rejections, See **Section I**
Methodology: MGIT 9050 system, Gen-Probe
Add. Information: NA
CPT Code: Culture 87116; Identification–Gen-Probe 87149

MYCOBACTERIAL CULTURE, Other than Blood

Synonyms: AFB, TB
Test Laboratory: Mycobacteriology (TB), 803-896-0828
Days Test Performed: Monday – Friday
Request Form: DHEC 1335, Test #601
Special Instructions: None
Specimen & Volume: 5-10 ml sputum, and other body fluids; 10 ml urine or gastric washings,

MYCOBACTERIAL CULTURE, Other than blood (Continued)

walnut sized portion of feces or 10 ml liquid stool See **Mycobacterium Culture Collection Procedure, Section III**

Container: Screw capped 50 ml polypropylene conical tube

Storage/Shipping Temperature: Store and ship sputum at room temperature. If shipping is delayed more than 24 hours, store in refrigerator. Store Urine in refrigerator and ship cold with cold packs.

Shipping Description: See **Packing and Shipping Instructions, Secion IV**

Rejection Criteria, specific: Specimen > 5 days old when received (Sputum and Urine). For universal rejections, See **Section I**

Methodology: Conventional culture methods, Gen-probe for ID

Add. Information: NA

CPT Code: Conc 87015; Culture 87116; Identification- Gen-Probe 87149

MYCOBACTERIAL CULTURE, REFERRED FOR IDENTIFICATION

Synonyms: AFB, TB

Test Laboratory: Mycobacteriology (TB), 803-896-0828

Days Test Performed: Monday - Friday

Request Form: DHEC 1335, Test # 602

Special Instructions: None

Specimen & Volume: Send only pure culture with sufficient growth to perform test

Container: LJ slant preferred

Storage/Shipping Temperature: Store and ship at room temperature

Shipping Description: Infectious substance See **Packing and Shipping Instructions, Section**

Rejection Criteria, specific: Contaminated culture, non-viable organism. For universal rejections, **See Section I**

Methodology: Gen-Probe

Add. Information: NA

CPT Code: GenProbe 87149

MYCOBACTERIA ANTIBIOTIC SUSCEPTIBILITY

Synonyms: Sensitivity Testing

Test Laboratory: Mycobacteriology (TB), 803-896-0828

Days Test Performed: Weekly on new TB isolates and by request on previously positive patients (Sent to California State Lab for Testing)

Request Form: DHEC 1335, Test # 604

Special Instructions: Call Laboratory for drugs other than INH, Ethambutol, Rifampin, Streptomycin and Pyrazinamide.

Specimen & Volume: NA

Container: NA

Storage/Shipping Temperature: NA

Shipping Description: NA

Rejection Criteria, specific: None. For universal rejections, See **Section I**

MYCOBACTERIA ANTIBIOTIC SUSCEPTIBILITY (Continued)

Methodology: Versa Trek 87190; Conventional disk method 87184

Add. Information: NA

CPT Code: Versa Trek 87190; Conventional disk method 87184

NAEGLERIA FOWLERI

Synonym: NA

Test Laboratory: Testing is no longer performed at the SC DHEC Bureau of Laboratories. Special cases may be considered by the CDC Division of Parasitic Diseases. Contact the Clinical Microbiology at 803-896-0805 to arrange for testing.

Special Instructions: The CDC Division of Parasitic Diseases must be contacted prior to specimen submission. Specimens must be assigned a South Carolina testing number and submitted with a CDC DASH form (50.34).

Specimen &Volume: 1 ml CSF or small piece of tissue (brain, lung, corneal scrapings

Container: Sterile screw-capped tube containing small amount of Page's amoeba saline

Storage/Shipping Temperature: Store and ship at room temperature.

Shipping Description: After acquiring a South Carolina number and the CDC DASH form, specimens may be shipped overnight Monday – Thursday, avoid weekend deliveries by the submitting facility.

Rejection Criteria, specific: Specimen refrigerated or frozen, Formalin fixed specimens are not suitable for molecular studies For universal rejections, See **Section I**

Methodology: Conventional PCR, Real-Time PCR

Add. Information: NA

CPT Code: 87181

NEISSERIA MENINGITIDIS

Synonym: Bacterial meningitis

Test Laboratory: Clinical Microbiology 803-896-0805

Days Test Performed: Monday – Friday

Request Form: DHEC 1335, Test #511 (Organism for ID-aerobic/referred isolate).

Special Instructions: None.

Specimen and Volume: Pure bacterial isolate on an agar slant that will support the growth of the Isolate (chocolate agar is preferred).

Container: Screw-capped tube, containing agar slant that will support growth of isolate

Storage/Shipping Temperature: Store in a 35°C (CO_2) incubator and ship at room temperature.

Shipping Description: See **Packing and Shipping Instructions in Section IV**. May use state courier for overnight delivery.

Rejection Criteria, specific: Culture non-viable; culture mixed. For universal rejections, see **Section I**

Methodology: Conventional culture methods and biochemical analysis.

Additional Information: NA

CPT Code: Identification 87077

NEWBORN SCREENING PANEL

Synonyms: NA; Tests include: Amino Acid profile (including PKU), Galactosemia (GAO and GALT), T4 and TSH for Congenital Hypothyroidism (CH), Congenital Adrenal Hyperplasia (CAH), Hemoglobinopathies (Sickle variants,etc.),Acylcarnitine(including MCADD), Biotinidase Deficiency, Immuno Reactive Trypsin (IRT) for Cystic fibrosis, and Succinylacetone (SUAC) for Tyrosinemia--Type I, and T-cell Receptor Excision Circle (TREC) analysis for Severe Combined Immune Deficiency.

Test Section: Newborn Screening, 803-896-0874

Days Test Performed: Monday - Friday

Request Form: DHEC # 1327

Special Instructions: See **Capillary Blood Collection by Heel-stick, Section III**

Specimen & Volume: Whole bloodspots on filter paper; Fill each circle with 1 large drop of

Container: Special Filter paper attached to request form and preaddressed mailing envelope

Storage/Shipping Temperature: Allow blood to dry 4 hrs or overnight before packing. Store and ship at room temperature within 24 hours of collection. Do **NOT** mail specimens in any type of plastic bag or packaging, or polymer-lined mailing envelope.

Shipping Description: See **Packing and Shipping Instructions, Section IV**

Rejection Criteria, specific: Scratched and abraded, contaminated, clotted/layered, or super-saturated spots. There are three tests that are affected by blood transfusions: Hemoglobinopathy screen, Biotinidase, and GALT. If the patient has been transfused in the previous 120 days, no test result will be reported for these three tests. All other tests will be reported. The three tests affected will need to be repeated 120 days after the last transfusion. For universal rejections, See **Section I**

Methodology: T4 Thyroid, TSH Thyroid, 17-OHP (CAH), and IRT (Cystic Fibrosis) – (Fluorimmuno assay (FIA); Hemoglobinopathies - Isoelectric Focusing (IEF), and High Pressure Liquid Chromatography(HPLC) ; Amino Acid Profile, Acylcarnitines, and Succinylacetone (SUAC) - Tandem Mass Spectrometry; and Biotinidase, GALT, and TGAL (GAO) - Flow Analyzer

Add. Information: Interpretation: All results will be reported to the hospital, clinic, or institution and the attending physician (2 separate copies).

1. **Amino Acid Profile:**

   The following amino acids are analyzed:

   Valine
   Leucine and Isoleucine
   Methionine
   Phenylalanine
   Citrulline
   Tyrosine

2. **Acylcarnitines Profile**

   This profile is run to detect abnormalities in fatty acid and organic acid metabolism.

The following acylcarnitines are analyzed:

Free carnitine

C2 (Acetyl carnitine)

C3 (Propionyl carnitine)

C4 (Butyryl carnitine)

C5:1 (Tiglyl carnitine)

C5 (Isovaleryl carnitine)

NEWBORN SCREENING PANEL (Continued)

C3DC (Malonyl carnitine) + C4-OH (3-Hydroxy-butyryl carnitine)

C6 (Hexanoly carnitine)

C4DC (Methylmalonyl carnitine) + C50H (3-Hydroxy-isovaleryl carnitine)

C8 (Octanoyl carnitine)

C10:2 (Decadienoyl carnitine)

C10:1 (Decenoyl carnitine)

C10 (Decanoyl carnitine)

C5DC(Glutaryl carnitine) + C6OH (3-Hydroxy-hexanoyl carnitine)

C12:1 (Dodecenoyl carnitine)

C6-DC (Adipyl carnitine)

C14:2 (Tetradecodienoyl carnitine)

C14:1 (Tetradecenoyl carnitine)

C14 (Myristoyl carnitine)

C16 (Palmitoyl carnitine)

C16-OH (3-hydroxyl Palmitoyl carnitine)

C18:2 (Linoleyl carnitine)

C18:1 (Oleyl carnitine)

C18 (Octadecanoyl carnitine)

C18:1-OH (3-hydroxyl Oleyl carnitine)

CPT Codes: Amino Acid Profile 82139; T4 84437; TSH 84443; CAH 83498; Galactosemia 82760,82775; Hemoglobinapathies 83020; Acylcarnitines 82017; Biotinidase 82261; IRT for Cystic Fibrosis 83516; SUAC 82542; TREC for SCID 81479

NOROVIRUS DETECTION BY REAL TIME RT- PCR

Synonyms: Norwalk Virus, Norovirus PCR

Test Laboratory: Molecular Microbiology, 803-896-0824/803-896-0777

Days Test Performed: Monday-Friday

Request Form: DHEC 1335, Test #114

Special Instructions: The availability of this test is restricted to epidemiological investigations. Approval for testing must be obtained and documented on the requisition prior to specimen submission. Please call 803-896-0777 or 803-896-0824 to obtain approval.

Specimen & Volume: A peanut-sized or tablespoon volume of fresh diarrheal stool. Specimens collected within 48-72 hours of onset of symptoms are preferred. Specimens collected within 7 days of onset of symptoms will be accepted. Rectal swabs are not acceptable. Please batch submissions if possible.

Container: Sterile, screw capped, leak-proof, 50 ml conical tube or urine container

Storage/Shipping Temperature: Store in refrigerator and ship with cold packs.

Shipping Description: See **Packing and Shipping Instructions, Section IV**

NOROVIRUS DETECTION BY REAL TIME RT- PCR (Continued)

Rejection Criteria, specific: Specimens placed in any type of media; Specimen not cold on arrival; Specimen more than 7 days old when received. For universal rejections, see **Section I**

Methodology: Real-time reverse transcriptase polymerase chain reaction (real-time RT-PCR)

Add. Information Used to detect the presence of Norovirus nucleic acid (RNA). Results are reported as negative or positive for the presence of genogroup I or genogroup II Norovirus.

CPT Code: Extraction 83890; Amplification 83898; Reverse transcriptase 83902

PAP TEST, LIQUID-BASED MONOLAYER

Available only to DHEC county health department clinics

Synonyms: GYN Pap Test, Gynecologic Pap Test, Liquid-Based Pap Test; Monolayer Pap Test

Test Laboratory: Center of Disease Detection (CDD), 888-858-8663

Days Test Performed: Referred to CDD

Request form: CDD AFTIS

Special Instructions: Referred to CDD

Specimen & Volume: Referred to CDD

Container: Referred to CDD

Storage/Shipping Temperature: Referred to CDD

Shipping Description: Referred to CDD

Rejection Criteria, specific: Referred to CDD

Methodology: Referred to CDD

Add. Information: Referred to CDD

CPT Code: Monolayer Screen 88142; Physician's Interpretation 88141

PARAINFLUENZA VIRUS CULTURE- See "Respiratory Virus Culture"

PARASITE SEROLOGY

Synonyms: NA; Test include: Chagas disease, cysticercosis, echinococcosis, leishmaniasis, malaria, schistosomiasis, trichinosis, visceral larva migrans (Toxocara)
Toxoplasmosis; For additional information call 803-896-0805.

Test Laboratory: Referred to Centers for Disease Control and Prevention (CDC) for testing

Days Test Performed: NA

Request Form: CDC Specimen Referral Form 50.34 Rev. 9-2002; Requesting laboratories must have a state public health number to include on this form. Please call 803-896-0805 to obtain number.

Special Instructions: None

Specimen & Volume: 2 ml Whole clotted blood or serum

Container: Red top vacuum tube See **Venipuncture Procedure, Section III**, if needed.

Storage/Shipping Temperature: NA

Shipping Description: See **Packing and Shipping Instructions, Section IV**

Rejection Criteria, specific: None. For universal rejections, See **Section I**

Methodology: NA

PARASITE SEROLOGY (Continued)

Add. Information: NA

CPT Code: NA

PARASITE ID BY PCR

Parasite ID by PCR testing is available for outbreaks as determined by the SC DHEC Division of Acute Disease Epidemiology.

Synonyms: Cryptosporidium, Cyclospora cayetanensis, Entamoeba histolytica, Giardia lamblia

Test Laboratory: Clinical Microbiology, 803-896-0805

Days Test Performed: Monday – Friday **Note:** **For same day test results, must receive specimen by noon.**

Request Form: DHEC 1335, Test #410 other (specify)

Special Instructions: Call Clinical Microbiology

Specimen & Volume: 2 ml Whole clotted blood or serum

Container: Transport tube in Enteric Kit with Cary-Blair medium

Storage/Shipping Temperature: Ship on cold packs

Shipping Description: See **Packing and Shipping Instructions, Section IV**

Rejection Criteria, specific: Unpreserved stool and specimen perserved in PVA.
For universal rejections, See **Section I**

Methodology: FilmArray GI panel (PCR)

Add. Information: To detect the presence of *Cyclospora cayetanensis, Crytosporidium, Entamoeba histolytica, and Giardia lamblia*

CPT Code: 87507

PKU - See "Newborn Screening Panel"

POLIOMYELITIS - See "Enterovirus culture"

QuantiFERON-TB Gold (QFT)

Synonyms: QFT

Test Laboratory: Virology & Rabies, 803-896-0819/803-896-0820

Days Test Performed: Monday-Friday, weekend testing available with prior approval by Supervisor or Division Director.

Request Form: DHEC 1335, Test #605

Special Instructions: If specimens are incubated at regional incubation sites, the incubation start and end times must be included on the DHEC 1335. If the specimens will not be incubated at the regional sites, specimens must be received at the BOL Virology laboratory within 16 hours of collection.

Specimen & Volume: Whole blood, 1mL in each tube. See **Ordering Supplies and Specimen Collection, Section III**

Container: Three (3) QuantiFERON-TB Gold tubes – Nil antigen (Grey cap), TB antigen (Red cap), Mitogen (Purple cap)

Storage/Shipping Temperature: Store at room temperature (17-25°C) prior to and after incubation. Ship room temperature via state courier in designated QFT shipper.

QuantiFERON-TB Gold (QFT) (Continued)

Shipping Description: Send to the attention of the Virology & Rabies laboratory in designated QFT shipper. See **Packing and Shipping Instructions, Section IV**

Rejection Criteria: Specimen volume insufficient or overfilled, incubation performed incorrectly. For universal rejections, See **Section I**

Methodology: Detection of interferon-γ by ELISA

Additional Information: Additional shippers will be supplied upon request.

CPT Code: 86480

RABIES EXAMINATION

NOTE: The Bureau of Laboratories is the only laboratory in S.C. which performs tests for rabies in animals. Human testing only performed at CDC with prior approval. Call Virology/Rabies before sending to obtain proper documentation, 803-896-0819/803-896-0820

Synonyms: NA

Test Laboratory: - Virology/Rabies, 803-896-0819

Days Test Performed: Monday- Friday only; Weekend and holiday only with notification and emergency testing criteria met

Request Form: DHEC 1308, Test #260

Special Instructions: Contact the local county health department for information on specimen collection and shipping instructions. **Confirmation is a postmortem procedure**; because standard procedure currently requires the examination of brain tissue, the suspect animal must either be sacrificed or have died before the examination can be performed. All county health departments maintain containers appropriate for shipping specimens for examination, information on the management of animals suspected of being rabid, and to obtain vaccine for persons exposed to a rabid animal after consultation with the state epidemiologist.

Specimen & Volume: Brain tissue

Container: Ship whole animal head.

Storage/Shipping Temperature: Keep cold; See special instructions above.

Shipping Description: See special instructions above.

Rejection Criteria, specific: No brain tissue or tissue decomposed or grossly contaminated. For universal rejections, See **Section I**

NOTE: The Bureau of Laboratories is the only laboratory in S.C. which performs tests for rabies in animals. Human testing only performed at CDC with prior approval. Call Virology/Rabies before sending to obtain proper documentation, 803-896-0819/803-896-0820

Methodology: Fluorescent Antibody (FA)

Add. Information: Reported as positive or negative. All positive reports are called directly to the county health department, or after regular working hours, to the county environmentalist who submitted the specimen

CPT Code: NA

RESPIRATORY PANEL by FilmArray (PCR)

Respiratory Panel by FilmArray testing is only available for outbreaks as determined by the SC DHEC Division of Acute Disease Epidemiology.

Synonyms: NA

Test Laboratory: Virology/Rabies, 803-896-0819

RESPIRATORY PANEL by FilmArray (PCR) (Continued)

Respiratory Panel by FilmArray testing is only available for outbreaks as determined by the SC DHEC Division of Acute Disease Epidemiology

Days Test Performed: Monday - Friday

Request Form: DHEC 1335, Write in FilmArray RP Panel

Special Instructions: Call Virology & Rabies Lab at 803-896-0819

Specimen & Volume: Nasopharyngeal Swab in Viral Transport Media. See **Viral Culture/Respiratory Culture/Herpes Culture Collection Procedure, Section III**

Container: Screw capped tube of viral transport media (Available upon request)

Storage/Shipping Temperature: Store in refrigerator. Ship with cold packs. If shipping is delayed more than 48 hours, freeze at -70°C and ship on dry ice.

Shipping Description: See **Packing and Shipping Instructions, Section IV**

Rejection Criteria, specific: Specimen type other than nasopharyngeal swab; Use of calcium alginate swab, Specimen not cold on arrival. For universal rejections, See **Section I**

Methodology: Multiplex PCR

Add. Information: NA

CPT Code: NA

RESPIRATORY SYNCYTIAL VIRUS - See " Respiratory Virus Culture"

RESPIRATORY VIRUS CULTURE

Synonyms: Battery of tests includes culture for Influenza A and B, Parainfluenza I, II, III, Adenovirus, Human Metapneumovirus (hMPV), and Respiratory Synctial (RSV) from a single specimen.

Test Laboratory: Virology/Rabies, 803-896-0819

Days Test Performed: Monday - Friday

Request Form: DHEC 1335, Test #271

Special Instructions: Use swab with polyester tip.

Specimen & Volume: Throat swab (polyester tip), NP, upper Respiratory or lower Respiratory specimens See **Viral Culture/Respiratory Culture/Herpes Culture Collection Procedure, Section III**

Container: Screw capped tube of viral transport media (Available upon request)

Storage/Shipping Temperature: Store in refrigerator. Ship cold with cold packs within 24-48 hours. If shipping is delayed more than 48 hours, freeze at -70°C and ship on dry ice.

Shipping Description: See **Packing and Shipping Instructions, Section IV**

Rejection Criteria, specific: Specimen not cold on arrival; calcium alginate swab used for collection. For universal rejections, See **Section I**

Methodology: Virus isolation; centrifuge enhanced (Shell Vial) technique

Add. Information: NA

CPT Code: Culture 87254; Identification 87253

ROTAVIRUS - See "GI Outbreak"; *Mark test 272 on DHEC 1335 when only Rotavirus is suspected or mark GI outbreak if part of an epidemiological outbreak.*

RPR - See "Syphilis Serology (STS)"

RUBELLA SEROLOGY- IgG and IgM

Synonyms: German measles antibody, rubella immune screen, rubella IgG; and IgM
Test Laboratory: Virology/Rabies, 803-896-0819
Days Test Performed: IgG – once /week and IgM – Referred to CDC
Request Form: DHEC 1332 - Test #006 for IgM, Test #005 for IgG
Special Instruction: Call prior to sending specimen for IgM, 896-0819
Rubella IgG does not require calling
Specimen & Volume: 2 ml whole clotted blood, or 1 ml serum
Container: Red top vacuum tube See **Venipuncture Procedure, Section III**, if needed.
Storage/Shipping Temperature: Store and ship at room temperature.
Shipping Description: See **Packing and Shipping Instructions, Section IV**
Rejection Criteria, specific: None. For universal rejections, See **Section I**
Methodology: EIA
Add. Information: NA
CPT Code: 86762 each immunoglobulin

RUBEOLA VIRUS SEROLOGY-IMMUNE STATUS/DIAGNOSTIC

Synonyms: Measles IgG, Measles IgM
Test Laboratory: Virology/Rabies, 803-896-0819
Days Test Performed: IgG – Once/Week and IgM – As needed
Request Form: DHEC 1332 - Test #111 for IgM, Test #132 for IgG
Special Instruction: Call prior to sending specimen for IgM, 896-0819
Rubella IgG does not require calling
Specimen & Volume: 2 ml whole clotted blood, or 1 ml serum
Container: Red top vacuum tube See **Venipuncture Procedure, Section III**, if needed.
Storage/Shipping Temperature: Store and ship at room temperature.
Shipping Description: See **Packing and Shipping Instructions, Section IV**
Rejection Criteria, specific: None. For universal rejections, See **Section I**
Methodology: EIA
Add. Information: IgM: Used in diagnosis of measles and during possible outbreaks. IgM antibodies usually appear 3-5 days after onset of rash. IgG: Used to determine immune status of patient.
CPT Code: 86765

SALMONELLA - See "Enteric Pathogens Culture"

SALMONELLA TYPHI - See "Enteric Pathogens Culture"

SCABIES

Synonyms: Mites, Sarcoptes scabei
Test Laboratory: Entomology – Dr. Evans, 803-896-3802
Days Test Performed: Monday - Friday
Request Form: DHEC 1335, Test #410

SCABIES (Continued)

Special Instructions: Place skin scrapings in 1-2 drops of mineral oil on a glass slide and cover with a cover slip. Please notify Dr. Evans prior to submission.

Specimen & Volume: Skin scrapings from infected area See **Collection Procedure for Scabies, Section III**

Container: Cardboard slide mailer in biohazard bag

Storage/Shipping Temperature: Store and ship at room temperature.

Shipping Description: See **Packing and Shipping Instructions, Section IV**

Rejection Criteria, specific: Too much oil used (several drops is too much). For universal rejections, See **Section I**

Methodology: Microscopic examination

Add. Information: Detection of scabies

CPT Code: 87210

SCHISTOSOMIASIS SEROLOGY - See "Parasite Serology"

SHIGA-TOXIN TEST – See "*Esherichia coli* – shiga-toxin producing"

SHIGELLA - See "Enteric Pathogens Culture"

SICKLE CELL - See "Hemoglobin Electrophoresis"

SPOROTRICHOSIS SEROLOGY

Synonyms: NA

Test Laboratory: Referred to CDC Mycoses Immunodiagnostic, 404-639-3469

Days Test Performed: Referred to CDC

Request Form: CDC form

Special Instructions: None

Specimen & Volume: 5 ml Whole clotted blood or 2 ml serum

Container: Red top vacuum tube See **Venipuncture Procedure, Section III**, if needed

Storage/Shipping Temperature: Store and ship at room temperature.

Shipping Description: See **Packing and Shipping Instructions, Section IV**

Rejection Criteria, specific: None. For universal rejections, See **Section I**

Methodology: NA

Add. Information: NA

CPT Code: NA

STAPHYLOCOCCUS

Synonyms: "Enteric Pathogen Culture" or "Aerobe referred for Identification" for VISA/VRSA confirmation, see "*Staphylococcus* (VISA/VRSA) isolates"

Test Laboratory: Clinical specimens and isolates - Clinical Microbiology 803-896-0805; Food specimens – Food Microbiology 803-896-0872; MRSA/VRSA isolates from suspected outbreaks – Molecular Microbiology 803-896-0669

Days Test Performed: Upon request.

STAPHYLOCOCCUS (Continued)

Request Form: DHEC 1335, Test #510 (Call Food Microbiology for Food Specimen Form information)

Special Instructions: None.

Specimen and Volume: Swabs – transport in medium that will support the growth of the organism. Referred Isolate – transport on an agar slant that will support growth of the isolate. Food – call the food microbiology laboratory before shipping food samples (803-896-0872).

Container: Screw-capped tube containing agar slant that will support growth of isolate

Storage/Shipping Temperature: Ship at room temperature.

Shipping Description: See **Packing and Shipping Instructions in Section IV**. May use state courier for overnight delivery.

Rejection Criteria, specific: Culture non-viable; culture mixed. For universal rejections, See **Section I**

Methodology: Conventional culture methods and biochemical analysis. Pulsed Field Gel Electrophoresis for outbreak investigations.

Additional Information: NA

CPT Code: 87077

STAPHYLOCOCCUS (VISA/VRSA) ISOLATES

Synonyms: VISA/VRSA

Test Laboratory: Clinical Microbiology 803-896-0805 and the Centers for Disease Control.

Days Test Performed: Upon request.

Request Form: DHEC 1335, Test #510

Special Instructions: According to the CDC and the 2010 CLSI update, only isolates with a commercial instrument MIC >4 or Etest ≥ 6 need to be sent to a reference laboratory for confirmation. According to the CDC, results from the Vitek 2, MicroScan, Phoenix, or Etest are accurate and correlate with studies performed at the CDC. MIC values of 2, 3, and 4 are not uncommon.

Specimen and Volume: Pure bacterial isolate on an agar slant that will support the growth of the isolate (chocolate agar is preferred). Include both isolated colony and at least one original culture plate, as resistance can be lost over time and subbing out organism.

Container: Screw-capped tube containing agar slant that will support growth of isolate

Storage/Shipping Temperature: Ship at room temperature.

Shipping Description: See **Packing and Shipping Instructions in Section IV**. May use state courier for overnight delivery.

Rejection Criteria, specific: Culture non-viable; culture mixed. For universal rejections, See **Section I**

Methodology: Conventional culture methods and biochemical analysis.

Additional Information: NA

CPT Code: 87077

ST. LOUIS EQUINE ENCEPHALITIS - See "Arbovirus Serology"

STREPTOCOCCUS (BETA HEMOLYTIC GROUP A)

Synonym: Group-A Strep, Streptococcus pyogenes

STREPTOCOCCUS (BETA HEMOLYTIC GROUP A) (Continued)

Test Laboratory: Clinical Microbiology 803-896-0805

Days Test Performed: Monday - Friday

Request Form: DHEC 1335, Test #510

Special Instructions: Testing only available with consultation for outbreak investigations. Please contact Clinical Microbiology, 803-896-0870

Specimen and Volume: One (1) Throat Swab

Container: Culturette tube with transport medium or Bacterial swab transport

Storage/Shipping Temperature: Store and ship at room temperature.

Shipping Description: See **Packing and Shipping Instructions in Section IV**. May use state courier for overnight delivery.

Rejection Criteria, specific: Inappropriate specimen transport device; specimen in transit more than 3 days. For universal rejections, See **Section I**

Methodology: Conventional culture methods

Additional Information: Submit organisms (Grp-A Bets Strep) from sterile body sites to be frozen

CPT Code: Identification 87081

SUSCEPTIBILITY TESTING - See "Mycobacterial Susceptibility"

SYPHILIS SEROLOGY SCREEN

Synonyms: RPR, Non-Treponemal Antibody

Test Laboratory: Diagnostic Serology, 803-896-0811

Days Test Performed: Monday - Friday

Request Form: DHEC 1332 Test #001 or Test #235,

Special Instructions: None

Specimen &Volume: 2 ml whole clotted blood or 1 ml serum

Container: Red top vacuum tube See **Venipuncture procedure Section III**, if needed.

Storage/Shipping Temperature: Store and ship at room temperature; refrigerate and ship cold if more than 24 hours. Specimen must arrive within 3 days of collection.

Shipping Description: See **Packing and Shipping Instructions, Section IV**

Rejection Criteria: Plasma specimen; more than 24 hours old. For universal rejections, See **Section I**

Methodology: RPR

Add. Information: Quantitation performed on positives

CPT Code: 86592

T4 LYMPHOCYTES - See "Lymphocyte Subset"

TB CULTURE - See "Mycobacterial Culture"

TOXOPLASMA SEROLOGY- See "Parasite Serology"

TP-PA SEROLOGY

Synonyms: MHA-TP

TP-PA SEROLOGY (Continued)

Test Laboratory: Diagnostic Serology, 803-896-0811
Days Test Performed: Twice weekly usually Monday and Thursday
Request Form: DHEC 1332 Test #002 and Test #004
Special Instructions: None
Specimen & Volume: 0.5 ml serum See **Venipuncture Procedure, Section III**, if needed.
Container: Red top Vacutainer
Storage/Shipping Temperature: Store and ship at room temperature; refrigerate and ship cold if more than 24 hours.
Shipping Description: See **Packing and Shipping Instructions, Section IV**
Rejection Criteria, specific None. For universal rejections, See **Section I**
Methodology: Particle Agglutination
Add. Information: Used to determine the stage of infection; Not a screening test; Reactive test is usually reactive for life (85% of cases)
CPT Code: 86780

TRACE HEAVY METALS, URINE

Synonyms: NA
Test Laboratory: Analytical Chemistry, 803-896-0886
Days Test Performed: as requested
Request Form: DHEC 1332, Test #885
Special Instructions: None
Specimen & Volume: Minimum 10mL urine.
Container: Plastic urine container
Storage/Shipping Temperature: Store and ship urine frozen on dry ice. Freeze urine specimen if shipping is delayed.
Shipping Description: See **Packaging and Shipping Instructions, Section IV.** For further instructions please contact Analytical Chemistry at 803-896-0886.
Rejection Criteria, Specific: Insufficient quantity (QNS). For universal rejections, See **Section I.**
Methodology: Inductively Coupled Plasma Mass Spectrometry
Add. Information: NA
CPT Code: NA

TREPONEMAL ANTIBODY SEROLOGY See "TP-PA"

TRICHINOSIS - See "Parasite Serology"

TUBERCULOSIS CULTURE - See "Mycobacterial Culture"

TULAREMIA SEROLOGY

Synonyms: NA
Test Laboratory: Referred to CDC
Days Test Performed: NA

TULAREMIA SEROLOGY (Continued)

Request Form: CDC Form
Special Instructions: Contact Special Pathogens, 803-896-0777
Specimen & Volume: 2 ml Whole blood or serum
Container: Red top vacuum tube See **Venipuncture Procedure, Section III**, if needed.
Storage/Shipping Temperature: Store and ship at room temperature.
Shipping Description: See **Packing and Shipping Instructions, Section IV**
Rejection Criteria, specific: None. For universal rejections, See **Section I**
Methodology: NA
Add. Information: Interpretation printed on CDC report
CPT Code: 86000

VARICELLA VIRUS CULTURE

Synonyms: Chickenpox
Test Laboratory: Virology/Rabies, 803-896-0819
Days Test Performed: Monday - Friday
Request Form: DHEC 1335, Test #270
Special Instructions: Write 'Varicella' in block on form for Agent/Organism/Virus Suspected.
Specimen & Volume: Vesicle fluid
Container: Screw capped tube of viral transport media (Available upon request)
Storage/Shipping Temperature: Store in refrigerator and ship cold with cold packs. Ship within 24 hours after collection.
Shipping Description: See **Packing and Shipping Instructions, Section IV**
Rejection Criteria, specific: Specimen more than 24 hours old when received; Specimen not cold on arrival. For universal rejections, See **Section I**
Methodology: Cell culture
Add. Information: NA
CPT Code: Culture 87252; Identification 87253

VARICELLA VIRUS SEROLOGY

Synonyms: Chickenpox, Varicella-Zoster Virus Antibodies
Test Laboratory: Virology/Rabies, 803-896-0819
Days Test Performed: Once/Week
Request Form: DHEC 1332, Test #110 Varicella IgG for Immune Status
Special Instructions: NA
Specimen & Volume: 5 ml. whole blood or 2 ml serum; Single specimen for immune status, See **Venipuncture Procedure, Section III**, if needed.
Container: Red top vacuum tube
Storage /Shipping Temperature: Store and ship at room temperature.
Shipping Description: See **Packing and Shipping Instructions, Section IV**
Rejection Criteria, specific: None. For universal rejections, See **Section I**

VARICELLA VIRUS SEROLOGY (Continued)

Methodology: EIA

Add. Information: Interpretation: Immune status: Positive, negative or equivocal

CPT Code: 86787

VARIOLA

Synonyms: Small Pox

Test Laboratory: Special Pathogens, 803-896-0777

Days Test Performed: As needed

Request Form: 1335, Test #521; Suspect agent "Small pox"

Special Instructions: This organism has been designated as a Select Agent (Select Agent Regulation, 42 CFR, 73, Final Rule). Special handling criteria apply. Please contact the laboratory for special instructions at 803-896-0777, 803-767-8118, or 803-896-0773.

Specimen & Volume: Clinical samples, clinical isolates, and environmental samples (submitted by FBI)

Container: See Special Instructions Above

Storage/Shipping Temperature: See Special Instructions Above

Shipping Description: See Special Instructions Above

Rejection Criteria, specific: See Special Instructions Above

Methodology: Real Time PCR

Add. Information: NA

CPT Code: NA

VIBRIO - See "Enteric Pathogens Culture"

VIRAL CULTURE- See individual viral groups i.e. "Enterovirus or Respiratory Virus Culture", or individual virus, i.e. "Herpes" and "Varicella culture"

VIRAL ENTERIC CULTURE BY PCR

Viral Enteric culture testing is available for outbreaks as determined by the SC DHEC Division of Acute Disease Epidemiology.

Synonyms: Adenovirus F 40/41, Astrovirus, and Sapovirus (note see individual virus groups for Rotavirus and Norovirus)

Test Laboratory: Clinical Microbiology, 803-896-0805

Days Test Performed: Monday - Friday

Request Form: DHEC 1335, Test #508 and (specify)

Special Instructions: Call Clinical Microbiology

Specimen & Volume: Walnut sized portion of feces or 5-10 ml of liquid stool
Infant specimens may be collected in a disposable diaper with plastic side facing inside.

Container: Transport tube in Enteric Kit with Cary-Blair medium

Storage/Shipping Temperature: Ship on cold packs

Shipping Description: See **Packing and Shipping Instructions, Section IV.**

Rejection Criteria, specific: Unpreserved stool and specimen preserved in PVA. For universal rejections, See **Section I**

VIRAL ENTERIC CULTURE BY PCR (Continued)

Viral Enteric culture testing is available for outbreaks as determined by the SC DHEC Division of Acute Disease Epidemiology.

Methodology: FilmArray GI panel (PCR)
Add. Information: To detect the presence of enteric viruses in a GI outbreak situation
CPT Code: 87507

VIRAL LOAD - See "HIV-1 PCR Quantitative (RNA)"

VISCERAL LARVA MIGRANS - See "Parasite Serology"

WEST NILE VIRUS SEROLOGY- IgM

Synonyms: Arbovirus serology
Test Laboratory: Virology/Rabies, 803-896-0819
Days Test Performed: As needed
Request Form: DHEC 1332, Test #117
Special Instructions: IgM on serum specimens; IgM only on CSF
Specimen & Volume: CSF, 2 ml serum or 4ml whole blood in red-top tube
Container: Sterile vacuum tube or appropriate tube for CSF collection
Storage/Shipping: **Temperature:** CSF must be shipped cold within 24 hours. After 24 hours ship frozen on dry ice.
Shipping Description: See **Packing and Shipping Instructions, Section IV**
Rejection Criteria, specific: Specimen taken too early. For universal rejections, See **Section I**
Methodology: EIA
Add. Information: NA
CPT Code: IgM 86788

WHOOPING COUGH - See "*Bordetella pertussis*"

YERSINIA ENTERCOLITICA

Yersinia testing is available for outbreaks as determined by the SC DHEC Division of Acute Disease Epidemiology.

Synonyms: NA
Test Laboratory: Clinical Microbiology 803-896-0805
Days Test Performed: Monday – Friday
Request Form: DHEC 1335, Test #508 for identification from stool. Test #511 for isolate speciation.
Special Instructions: NA
Container: Screw-capped tube containing Cary Blair transport medium. Submit referred isolate on agar slant in a screw capped tube.
Specimen and Volume: Walnut sized portion of feces or 5-10 ml of liquid stool. Infant specimens may be collected in a disposable diaper with outside facing in. Submit referred isolate on agar slant in a screw capped tube.

YERSINIA ENTERCOLITICA (Continued)

Yersinia testing is available for outbreaks as determined by the SC DHEC Division of Acute Disease Epidemiology.

Storage/Shipping: **Temperature:** Store and ship stool preserved in Cary-Blair media at room temperature for arrival at the laboratory within 48 hours. Ship raw stool on cold packs for arrival at the laboratory within 24 hours. Ship slants at room temperature.

Shipping Description: See **Packing and Shipping Instructions in Section IV**. May use state courier for overnight delivery.

Rejection Criteria, specific: Quantity insufficient; specimen too old; improper transport media or conditions. For universal rejections, See **Section I**

Methodology: Conventional culture methods and biochemical analysis.

Additional Information: NA

CPT Code: Identification 87046

YERSINIA PESTIS

Synonyms: Plague

Test Laboratory: Special Pathogens, 803-896-0777

Days Test Performed: As needed

Request Form: 1335, Test #520 or 521; Suspect agent "Yersinia pestis"

Special Instructions: This organism has been designated as a Select Agent (Select Agent Regulation, 42 CFR, 73, Final Rule). Special handling criteria apply. Please contact the laboratory for special instructions at 803-896-0777, 803-767-8118, or 803-896-0773.

Specimen & Volume: Clinical samples, clinical isolates, and environmental samples (submitted by FBI)

Container: See Special Instructions Above

Storage/Shipping Temperature: See Special Instructions Above

Shipping Description: See Special Instructions Above

Rejection Criteria, specific: See Special Instructions Above

Methodology: A variety of sentinel and LRN methods are used to confirm or rule-out bacterial isolates.

Add. Information: NA

CPT Code: NA

ZIKA IgM

Synonyms: Zika IgM Serology

Test Laboratory: Virology/ Rabies, 803-896-0819

Days Test Performed: Weekly

Request Form: DHEC 1332, Write in Zika IgM

Special Instructions: Paired specimens are NOT required. See Venipuncture Procedure, Section III

Specimen & Volume: 5 ml blood or 2 ml serum

Container: Red top vacuum tube, Serum Separator

Storage/Shipping Temperature: Store and ship at 2-8°C

Shipping Description: See Packing and Shipping Instructions, Section IV

ZIKA IgM (Continued)

Rejection Criteria, specific: None. For universal rejections, See Section I

Methodology: IgM Capture ELISA

CPT Codes: 86790

SECTION III

ORDERING SUPPLIES
And
SPECIMEN COLLECTION

ORDERING SUPPLIES/FORMS/MAILING CONTAINERS

The Bureau of Laboratories will provide request forms, kits, media and mailing containers for the collection and shipping of laboratory specimens. These supplies are provided free of charge. Please use them judiciously and use **ONLY** to send laboratory specimens to the Bureau of Laboratories, SCDHEC, 8231 Parklane Road, Columbia, SC 29223. Supplies may be obtained by indicating the quantity required on **DHEC form 1323**, "Request for Laboratory Supplies". **Call 896-0913** to request these ordering forms or to request supplies, or mailing/shipping containers.

COLLECTION KITS

These kits contain collection materials, request form, an inside screw capped containment container with label, and a cardboard mailing container with a color coded mailing label attached. These are currently accepted by State and private couriers, and the US postal service. Each kit is to be used for only one specimen,

B. pertussis PCR kit	Insulated Shipper – Non Courier Customers
Enteric kit (for Bact. Culture)	Pink Label
Influenza kit	Insulated Shipper or Brown Box
Mycobacteriology (collection kit for TB)	Yellow Label

TRANSPORT MEDIUM

(Order request forms and shipping container separately.)

GC Culture medium
Pertussis transport medium (Regan-Lowe)
Viral Transport Media

OTHER SUPPLIES

Absorbent Packs
Biohazard Bags
Envelopes (for Newborn Screening and Hb electrophoresis blood spots)
GC/Chlamydia (for Antigen Detection) Unisex swab, vaginal swab, or urine collection kit
PPT Tubes for Viral Load

MAILING/SHIPPING CONTAINERS

(Shipping infectious specimens by courier or US postal system)

Mailing containers Screw cap: No. 10 (2 ½" x 6"), No. 20 (3" x 6"), and No. 30 (4" x 6")
Mailing boxes: 4" x 4", 6" x 6", and 8" x 8"
Rabies Container
Shipping Container (for shipping infectious substances)
Hospitals and other clients using a commercial carrier must use special approved mailing containers
These have been distributed and must be returned for re-use.

REQUEST FORMS

The request forms provided by the Bureau of Laboratories are listed below. Forms marked with a + will be pre-addressed with your name, address and sender number. Since an over-supply cannot be returned to stock, please use discretion in the number you request. **DO NOT LOAN OR BORROW** preprinted forms to another client. The preprinted sender number determines where result reports are mailed. Forms are periodically revised. Please discontinue use of old forms once a revision has been made.
A separate DHEC form 1323 (Request for Laboratory Supplies) must be submitted for each location with a unique sender number.

Form #	Test (revision date)	Form color
1308	+Rabies	Lt. Maroon
1323	Request for Lab Supplies (8/00)	Card stock/buff
1327	Newborn Screening (check expiration data on form)	White with green lettering
1332	+GC/ Chlamydia Screening	White
1332	+Hematology	White
1332	+ HIV Hepatitis /Syphilis Serology	White
1332	+Immunology	White
1332	+Lead Analysis	White
1332	+Lymphocyte Subset Panel	White
1332	+Serum Chemistry	White
1335	+Bacteriology	White
1335	+ Molecular	White
1335	+Mycobacteriology	White (Included in kit)
1335	+Parasitology	White
1335	+Virus Isolation/Herpes	White
1339	+Hemoglobin Electrophoresis (3/95)	Lt. Green

+Preaddressed

DHEC District laboratories forms:
These are available from Central Supply in the Sims/Aycock Building, 2600 Bull Street Columbia, SC 29201, (803) 898-3498.

INSTRUCTIONS FOR COMPLETING TEST REQUEST FORM 1332

PLEASE TYPE OR PRINT ALL ENTRIES AND PROVIDE ALL INFORMATION REQUESTED.

Date Received and Laboratory Specimen Block (upper right corner) **DO NOT USE. This area is for our Bureau of Laboratories' use only.**

1. Enter patient name.
2. Write M = Male; F = Female or TX = Transgender M2F (Male to Female); or TY = Transgender F2M (Female to Male) in Sex box.
3. Enter ethnicity as follows: H = Hispanic/Latino, N = Non-Hispanic/Latino and U = Unknown
4. Enter race as follows: A = Asian B = Black/African American
   W= White I = American Indian/Alaskan Native
   P = Native Hawaiian/Other Pacific Islander O= Other
   U = Unknown/Unclassified
5. Enter date of birth (month, day and year. Example: Enter 03/06/1960 for the birthday March 6, 1960.)
6. Enter the patient address and five-digit zip code.
7. Enter county of residence and the 10-digit telephone number.
8. Fill in patient MCI ID number (DHEC Clients only).
9. Enter local and clinic ID if applicable. (Private clients must provide a clinic ID)
10. Enter Program number.
11. Enter Country of Birth.
12. Enter billing number if billing number is different from sender number
13. Enter Clinic Type.
14. Enter Country of Birth.
15. Enter the date and time of collection and initial.
16. Check type/source of specimen.
17. In the Reason for Visit/Test box, check all that apply.
18. Chlamydia test: Check pregnancy status, risk, and symptom.

Use the codes below to identify client and partner Risk Factors during the **PAST 12 MONTHS**. (Circle all that apply)

CLIENT RISK	**1**. Sex w/Female (F) **2**. Sex w/Male (M) **3**. Sex w/Transgender (T) **4**. Injection Drug Use (IDU) **5**. Used non-injectable drug or alcohol anytime during past 12-months **Received drugs/money in exchange for sex with a:** **6**. F/partner **7**. M/partner **8**. T/partner **Had sex while high on drugs with a:** **9**. F/partner **10**. M/partner **11**. T/partner **12**. Child of HIV infected mother **13**. Refused **14**. Other **31.** Without Condom **32.** Oral Sex w/Female **33.** Oral sex w/Male
PARTNER RISK	**Client had sex with:** **15**. F/IDU **16**. F/HIV + **17**. F/of unknown status **18**. F/who exchanges sex for drugs/money **19**. F/who has transfusions/transplant recipient **20**. M/IDU **21**. M/HIV + **22**. M/who exchanges sex for drugs/money **23**. Person who is a known MSM **(for female clients only)** **24**. M/of unknown status **25**. M/who has transfusions/transplant recipient **26**. T/IDU **27**. T/HIV + **28**. T/of unknown status **29**. T/who exchanges sex for drugs/money **30**. T/who has transfusions/transplant recipient

20. Enter the Outbreak Number.
21. Enter Date of Onset if applicable and circle all symptoms that apply.
22. Mark test requested.
23. Send top 2 copies of the form with the specimen(s) to the lab. **Please Retain Third Copy For Your Records.**

COUNTY CODES

Abbeville	01	Greenwood	24
Aiken	02	Hampton	25
Allendale	03	Horry	26
Anderson	04	Jasper	27
Bamberg	05	Kershaw	28
Barnwell	06	Lancaster	29
Beaufort	07	Laurens	30
Berkeley	08	Lee	31
Calhoun	09	Lexington	32
Charleston	10	Marion	33
Cherokee	11	Marlboro	34
Chester	12	McCormick	35
Chesterfield	13	Newberry	36
Clarendon	14	Oconee	37
Colleton	15	Orangeburg	38
Darlington	16	Pickens	39
Dillon	17	Richland	40
Dorchester	18	Saluda	41
Edgefield	19	Spartanburg	42
Fairfield	20	Sumter	43
Florence	21	Union	44
Georgetown	22	Williamsburg	45
Greenville	23	York	46

SENDER NUMBERS

Private Physician Usually consists of the S.C. Medical License number preceded by the letter M.

Group Practice A number preceded by the letter G will be assigned to group practices at their request. Use of the group number will insure that a single bill will be sent for tests submitted by all physicians in the practice. If you desire to be billed in this manner, please contact (803) 896-0800 for assignment of a group number. If each physician wishes to be billed separately, use the appropriate assigned sender number.

Hospital Consists of the hospital license number preceded by the letter H. If the test result is to be mailed directly to the patient's physician, use the physician's name, address and sender number in the appropriate spaces on the form and write the hospital sender number in the billing number space.

Private Laboratory A number assigned by the Bureau of Laboratories. If not known, contact the Bureau at (803) 896-0800 for assignment.

DHEC County Health Depts. Consists of the assigned county code number preceded by a C.

BILLING NUMBERS

A billing number is only necessary if the test is to be billed to someone other than the sender.

PROGRAM NUMBERS

Used only when billing to a DHEC Program

0002 Children Rehabilitative Services
0004 Family Planning
0005 Sickle Cell Program
0006 Maternal and Child Health
0007 Cancer Control
0009 Tuberculosis Services - Outpatient
0010 Epidemiology & Laboratory Capacity – Antimicrobial (Chronic Disease Detection)
0011 Sexually Transmitted Diseases (STD)
0012 Certified Home Health Services
0023 Family Planning/HIV/AIDS – Richland County
0026 Adult Health
0027 Birth Defects (Metabolic Screening Program)
0031 Expanded & Integrated Human HIV Testing- Non-Clinical
0035 Expanded and Integrated HIV Testing for Populations-Clinical
0043 Environmental Health
0053 Newborn Metabolic Screening & Follow-Up
0055 Infant and Child Health Screening & Follow-Up
0056 EPSDT
0059 WCS (Women & Children's Services)
0063 Employee Health Services
0070 Epidemiology - Disease Control
0072 HIV-AIDS Alcohol & Drug Abuse Project
0095 WIC
0111 HIV/AIDS
0128 Health Promotion-Health Risk Reduction Project (Region 5 only)
0202 Immunization Program
0283 Family Planning Title X HIV/AIDS Supplemental –Trident
0286 Family Planning Title X HIV/AIDS Supplemental - Wateree
0299 Syphilis Elimination
0301 BT CDC Public Health Emergency Preparedness
0343 Family Planning HIV Grant

SPECIMEN COLLECTION PROCEDURES

Specimen Collection: Venipuncture Using the Vacuum System

Precaution: Wear non-latex gloves and liquid impervious laboratory coat or apron while collecting and preparing blood for shipment.

Supplies: see Clinical Formulary on the intranet for approved supplies
1. Vacuum tube system
2. Vacuum needle, 1 inch or 1 ½ inch; 18, 20, 21, 22, or 23 gauge
3. Disposable vacuum needle holder
4. Disposable tourniquet
5. 70% isopropyl alcohol or benzylkonium chloride pads
6. Sterile gauze pads (NO COTTON BALLS!)
7. Band-aids (optional)
8. Sharps disposal container (with stand or wall mounted)
9. Biohazard waste container

Personal Protective Equipment (PPE) Requirements:
1. Disposable gloves (required during collection)
2. Safety glasses (required if there is any chance of eye/mouth contamination during collection; strongly recommended if you wear contacts)
3. Liquid resistant/impervious lab coat or apron (required during collection)
4. Additional protection as recommended by OSHA and/or MSDS

Specimen Collection: You MUST have completed a DHEC Workshop and be rated proficient and competent BEFORE you can collect a venipuncture without direct supervision.
1. While putting on the appropriate PPE, explain the procedure to the patient and ask the patient to identify themselves or check a picture identification card.
   a. BEFORE putting on ANY PPE, wash hands with soap and water or use a hand sanitizer with at least 60% alcohol content.
   b. Order for putting on PPE: put eye protection on first (optional), then put on liquid resistant/impervious lab coat/apron, and then put on non-latex gloves.

2. Position the patient for taking blood from the antecubital vein, or the median cubital vein, or the cephalic vein.
   a. DIS can ONLY use one of these sites to collect venipuncture.
   b. MDs, APRNs, RNs, MTs, MLTs can use other sites on the arm or hand, if trained using standard Training Checklist and passed Competency Evaluation annually.

3. Apply disposable tourniquet to the arm just above the elbow and instruct the patient to make a fist; it is NOT necessary for the patient to “pump” their fist.
   a. Always palpate the vein with the disposable tourniquet BEFORE making a decision to puncture the vein.
   b. **DO NOT leave the tourniquet on for >2 minutes during a venipuncture!**

4. Select the best vein and cleanse the skin over the puncture site with 70% alcohol or benzylkonium chloride in ONE DIRECTION!
   a. **DO NOT** wipe back and forth with the 70 % alcohol/benzylkonium chloride.

b. Allow to dry without blowing on the site or fanning the site.
c. Once the site is dry, **DO NOT** palpate the vein with gloved finger; these are not sterile gloves.

5. Use sterile vacuum needle and attach (screwed onto) to a disposable adaptor.
   a. The vacuum collection tube may be inserted into the adaptor without danger of breaking the vacuum.
   b. **DO NOT** pierce the vacuum on the tube with the adapter needle.

6. "Fix" the vein selected for the venipuncture.
   a. Left thumb about an inch below where the needle is to enter.
   b. Press down on the arm and pull the skin toward the hand.
   c. The needle is to be in line with the vein.
   d. The needle is to be BEVEL SIDE UP!
   e. The needle is to be at approximately a 15 degree angle with the arm.
   f. You can adjust the angle depending on the depth of the vein.

7. Puncture the skin with a clean, smooth motion. BEVEL SIDE UP!
   a. **DO NOT** hesitate; this hurts.
   b. As the needle enters the vein, a little "give" will be felt.
   c. When inside the vein, grip the tube holder firmly and keep the holder steady.
   d. Press the vacuum tube onto the needle portion inside the holder.

8. While the needle is inside the vein, collect the required tubes of blood.
   a. Note: Collect blood in plain (red stopper) tubes before collecting blood in tubes with additives (e.g. EDTA)
   b. Note: DIS are ONLY allowed to collect a single tube per venipuncture.
   c. Mix tubes with additives by gently inverting 5-10 times to prevent clotting.
   d. **DO NOT** shake the tube(s)!
   e. Allow the red top tubes to stand in a test tube rack, upright, for at least 30 minutes to allow clotting before centrifugation.
   f. Note: some patients may take longer to clot, so allow extra time if patient is on maintenance doses of Coumadin and/or other platelet aggregate inhibitors.

9. Release tourniquet, withdraw needle from vein and apply pressure on venipuncture site with dry gauze.
   a. **DO NOT** cover the injection site with an alcohol sponge while withdrawing needle.
   b. **DO NOT** apply pressure on the venipuncture site with gauze if the needle is still in the arm!

10. Have patient apply pressure on the venipuncture site for 2-3 minutes to prevent leakage of blood under the skin and formation of a hematoma. When site no longer bleeds, a bandage may be applied if desired.
    a. Ask the patient to hold their arm straight up and lock their elbow.
    b. If the patient cannot do this, hold the arm straight up for them.

11. Label specimen tube (s) with proper patient identification information; if not already done when getting supplies together.
    a. Name of patient/client (at least first name initial and full last name).
    b. MCI number or other unique identification number.
    c. Date collected, time collected and initials of person who collected specimen.
    d. Note: if you use a computer label, just add time and initials of person collecting specimen.

12. Complete ALL information on the test request/lab requisition form(s): DHEC 1332/1335.
    a. Name of patient/client (full first name and full last name).
    b. MCI number or other unique identification number.
    c. Date collected, time collected and initials of person who collected specimen.
    d. Test required
    e. Type of specimen
    f. Ordering physician, APRN, RN, DIS
    g. Test(s) requested
    h. Sender Address or Sender code number
    i. Any specimen instructions or other important information
    j. Note: if you use a computer label, just add time and initials of person collecting specimen.
    k. Note: if you use a computer label, be sure to place the computer label with all demographic information on copy 1, copy 2 and copy 3.
    l. You will send the original top copy of the DHEC 1332/1335 with the specimen(s)
    m. Retain the third copy for your files in the County Health laboratory.

13. Properly dispose of needles (in biohazard puncture proof sharps container) and other contaminated materials used during venipuncture.
    a. Place all blood soaked material in the contaminated waste bag (Biohazard).
    b. Place all sharps in the sharps container and DO NOT fill above 2/3!
    c. DO NOT place any non-contaminated waste in the sharps container or Biohazard waste!

14. Remove PPEs in this order:
    a. Remove contaminated gloves.
    b. Wash hands with soap and water or with hand sanitizer with >60% alcohol.
    c. Remove any eye protection.
    d. Remove liquid impervious/resistant lab coat or apron.
    e. Wash hands with soap and water or with hand sanitizer with >60% alcohol.

15. BEFORE allowing the patient/client to leave, take the gauze off of the venipuncture site to ensure it has stopped bleeding.
    a. DO NOT wipe the area with gauze since this will initiate bleeding again (subcutaneous) and may cause a hematoma (bruise).
    b. DO NOT allow patient to get up from the chair, table, etc. without being physically at the side or in front of the patient/client: THIS IS A FALL PREVENTION MEASURE!

16. NOTE: DIS staff can ONLY draw one tube; no multi-draws or multiple tubes collected from the same venipuncture collection site.

17. No DIS staff can be trained and/or use a butterfly to collect a venipuncture.

Specimen Preparation:

1. Blood collected in a plain red stopper tube or in a serum separator tube (SST): allow the tube of blood to remain undisturbed in an upright position at room temperature for 20-30 minutes.
    a. When the specimen has clotted, DO NOT allow the serum to sit on the clot, whether collected in a red tube or SST tube, without separating through centrifugation; then store according to instructions in the Reference Laboratory manual for specimen collection and transport.
    b. Note: check manufacturer's package insert for maximum time blood can sit on clot BEFORE centrifugation, if using an SST (serum separator tube).

2. After a clot has formed, gently loosen the clot at the top; “rim” with a sterile applicator stick, if necessary.

3. Centrifuge tubes for 10-15 minutes.
   a. Since all centrifuges are calibrated by Instrumentation Department (Facilities Management Division, Bureau of Laboratories), the time for most centrifugation needs will be on the instrument.
   b. CHECK OUT THE CALIBRATED TIME/SPEED ON YOUR CENTRIFUGE!

4. Remove the serum carefully with a sterile transfer pipette, and transfer to a clean sterile rubber- stoppered tube or to a screw-top, plastic vial/tube. Avoid transferring any red cells.

5. Label tube or plastic vial running up the length of the tube.
   a. **Do NOT** wrap the label around or “flag” the label by pressing ends together and extending from the tube.
   b. This includes ALL vacuum tubes for chemistry, hematology and serology; red top, SST, or purple (EDTA) top tubes would be the common ones.

6. Store tubes of labeled serum in a refrigerator until the specimens are ready to ship to the clinic laboratory or the Bureau of Laboratories.

Special Procedural Notes:

1. If sending whole blood in a vacuum tube, omit steps 2 and 4 (see page III-6).

2. If using serum separator tubes (gel in the bottom of the tube, SST) omit steps 2 and 4 above. Be sure the gel forms a distinct barrier between serum and clot.

3. During the summer months, pack all SST specimens with a cold pack since the gel can possibly breakdown at temperatures experienced during the summer months. The breakdown of the gel allows the red blood cells to “leak” into the serum contaminating the specimen and possibly rendering the specimen unacceptable for testing.

4. Never use a gauge needle size smaller than a 23: this can cause hemolysis!

6. Always allow the blood to flow into a vacuum tube without adding additional pressure.

7. **DO NOT** take disposable tourniquet off until you have collected ALL of the tubes and the tubes are filled: when you take the tourniquet off once you are inside you run the risk of slow blood flow and/or short draws and/or insufficient blood volume.

8. For special considerations using a butterfly for a venipuncture, see the next procedure.

Specimen Collection: Venipuncture Using a Butterfly System

Precaution: Wear non-latex gloves and liquid impervious laboratory coat or apron while collecting and preparing blood for shipment.

Supplies: see Clinical Formulary on the intranet for approved supplies
1. Vacuum tube system
2. Butterfly needle: 21g, 22g, or 23g (NO SMALLER THAN 23G!)
3. Disposable vacuum needle holder
4. Disposable tourniquet
5. 70% isopropyl alcohol or benzylkonium chloride pads
6. Sterile gauze pads (NO COTTON BALLS!)
7. Band-aids (optional)
8. Sharps disposal container (with stand or wall mounted)
9. Biohazard waste container

Personal Protective Equipment (PPE) Requirements:
1. Disposable gloves (required during collection)
2. Safety glasses (required if there is any chance of eye/mouth contamination during collection; strongly recommended if you wear contacts)

3. Liquid resistant/impervious lab coat or apron (required during collection)
4. Additional protection as recommended by OSHA and/or MSDS

Specimen Collection: You MUST have completed a DHEC Workshop and be rated proficient and competent BEFORE you can collect a venipuncture without direct supervision. No DIS staff can be trained using this method.

Note: the use of a butterfly is to be used ONLY in special circumstances: elderly patients with non-patent veins; young children (less than 4 years old) or babies; patients with non-patent veins and the hand is the site of choice.

1. While putting on the appropriate PPE, explain the procedure to the patient and ask the patient to identify themselves or check a picture identification card.
   a. BEFORE putting on ANY PPE, wash hands with soap and water or use a hand sanitizer with at least 60% alcohol content.
   b. Order for putting on PPE: put eye protection on first (optional), then put on liquid resistant/impervious lab coat/apron, and then put on non-latex gloves.

2. Position the patient for taking blood from the antecubital vein, or the median cubital vein, or the cephalic vein: these are all on the arm.
   a. DIS can ONLY use one of these sites to collect venipuncture.
   b. MDs, APRNs, RNs, MTs, MLTs can use other sites on the arm or hand, if trained using standard Training Checklist and passed Competency Evaluation annually.
      1) Veins from the hand that can be used are: basilic veins (runs along the 5th digit, little finger).
      2) Veins from the hand that can be used are: metacarpal veins (runs along the 2nd or 4th digit, index/pointer finger and ring finger).
      3) Veins from the hand that can be used are: cephalic vein (runs along the side of wrist area or just above the thumb).

4) NO OTHER sites are to be used with the butterfly other than those listed in the venipuncture using the vacuum and the butterfly; no femoral, no temporal, no jugular, etc.

3. Apply disposable tourniquet to the arm just above the elbow, or on the forearm if using the hand, and instruct the patient to make a fist; it is NOT necessary for the patient to "pump" their fist.
   a. Always palpate the vein with the disposable tourniquet BEFORE making a decision to puncture the vein.
   b. **DO NOT leave the tourniquet on for >2 minutes during a venipuncture!**

4. Select the best vein and cleanse the skin over the puncture site with 70% alcohol or benzylkonium chloride in **ONE DIRECTION!**
   a. **DO NOT** wipe back and forth with the 70 % alcohol/benzylkonium chloride.
   b. Allow to dry without blowing on the site or fanning the site.
   c. Once the site is dry, **DO NOT** palpate the vein with gloved finger; these are not sterile gloves.

5. Use sterile butterfly needle and attach (screwed onto) to a disposable adaptor.
   a. If a butterfly is used with a syringe (5cc, 7cc or 10cc), collect the specimen following the same steps, except you will fill the vacuum tubes with the blood from the syringe.
   b. **DO NOT** put blood into the vacuum tubes by pressing the needle through the rubber septum; take the rubber septum off and gently add blood to the tube.
   c. The vacuum collection tube may be inserted into the adaptor without danger of breaking the vacuum.
   d. **DO NOT** pierce the vacuum on the tube with the adapter needle.

6. "Fix" the vein selected for the venipuncture.
   a. Left thumb about an inch below where the needle is to enter.
   b. Press down on the arm and pull the skin toward the hand.
   c. The needle is to be in line with the vein.
   d. The needle is to be BEVEL SIDE UP!
   e. The needle is to be at approximately a 15 degree angle with the arm.
   f. You can adjust the angle depending on the depth of the vein.

7. Puncture the skin with a clean, smooth motion. BEVEL SIDE UP!
   a. **DO NOT** hesitate; this hurts.
   b. As the needle enters the vein, a little "give" will be felt.
   c. When inside the vein, grip the tube holder firmly and keep the holder steady.
   d. Press the vacuum tube onto the needle portion inside the holder.

8. While the needle is inside the vein, collect the required tubes of blood.
   a. **Note: Collect blood in plain (red stopper) tubes before collecting blood in tubes with additives (e.g. EDTA**).
   b. Note: DIS is ONLY allowed to collect a single tube per venipuncture.
   c. Mix tubes with additives by gently inverting 5-10 times to prevent clotting.
   d. **DO NOT** shake the tube(s)!
   e. Allow the red top tubes to stand in a test tube rack, upright, for at least 30 minutes to allow clotting before centrifugation.
   f. Note: some patients may take longer to clot, so allow extra time if patient is on maintenance doses of Coumadin and/or other platelet aggregate inhibitors.

9. Release tourniquet, withdraw needle from vein and apply pressure on venipuncture site with dry gauze.

    a. **DO NOT** cover the injection site with an alcohol sponge while withdrawing needle.
    b. **DO NOT** apply pressure on the venipuncture site with gauze if the needle is still in the arm!

10. Have patient apply pressure on the venipuncture site for 2-3 minutes to prevent leakage of blood under the skin and formation of a hematoma. When site no longer bleeds, a bandage may be applied if desired.
    a. Ask the patient to hold their arm straight up and lock their elbow.
    b. If the patient cannot do this, hold the arm straight up for them.

11. Label specimen tube (s) with proper patient identification information; if not already done when getting supplies together.
    a. Name of patient/client (at least first name initial and full last name).
    b. MCI number or other unique identification number.
    c. Date collected, time collected and initials of person who collected specimen.
    d. Note: if you use a computer label, just add time and initials of person collecting specimen.

12. Complete ALL information on the test request/lab requisition form(s): DHEC 1332/1335.
    a. Name of patient/client (full first name and full last name).
    b. MCI number or other unique identification number.
    c. Date collected, time collected and initials of person who collected specimen.
    d. Test required
    e. Type of specimen
    f. Ordering physician, APRN, RN, DIS
    g. Test(s) requested
    h. Sender Address or Sender code number
    i. Any specimen instructions or other important information
    j. Note: if you use a computer label, just add time and initials of person collecting specimen.
    k. Note: if you use a computer label, be sure to place the computer label with all demographic information on copy 1, copy 2 and copy 3.
    l. You will send the original top copy of the DHEC 1332/1335 with the specimen(s)
    m. Retain the third copy for your files in the County Health laboratory.

13. Properly dispose of needles (in biohazard puncture proof sharps container) and other contaminated materials used during venipuncture.
    a. Place all blood soaked material in the contaminated waste bag (Biohazard).
    b. Place all sharps in the sharps container and DO NOT fill above 2/3!
    c. **DO NOT** place any non-contaminated waste in the sharps container or Biohazard waste!

14. Remove PPEs in this order:
    a. Remove contaminated gloves.
    b. Wash hands with soap and water or with hand sanitizer with >60% alcohol.
    c. Remove any eye protection.
    d. Remove liquid impervious/resistant lab coat or apron.
    e. Wash hands with soap and water or with hand sanitizer with >60% alcohol.

15. BEFORE allowing the patient/client to leave, take the gauze off of the venipuncture site to

ensure it has stopped bleeding.

a. **DO NOT** wipe the area with gauze since this will initiate bleeding again (subcutaneous) and may cause a hematoma (bruise).

b. **DO NOT** allow patient to get up from the chair, table, etc. without being physically at the side or in front of the patient/client: THIS IS A FALL PREVENTION MEASURE!

Specimen Preparation:

1. Blood collected in a plain red stopper tube or in a serum separator tube (SST): allow the tube of blood to remain undisturbed in an upright position at room temperature for 20-30 minutes.
   a. When the specimen has clotted, DO NOT allow the serum to sit on the clot, whether collected in a red tube or SST tube, without separating through centrifugation; then store according to instructions in the Reference Laboratory manual for specimen collection and transport.
   b. Note: check manufacturer's package insert for maximum time blood can sit on clot BEFORE centrifugation, if using an SST (serum separator tube).

2. After a clot has formed, gently loosen the clot at the top; "rim" with a sterile applicator stick, if necessary.

3. Centrifuge tubes for 10-15 minutes.
   a. Since all centrifuges are calibrated by Instrumentation Department (Facilities Management Division, Bureau of Laboratories), the time for most centrifugation needs will be on the instrument.
   b. CHECK OUT THE CALIBRATED TIME/SPEED ON YOUR CENTRIFUGE!

4. Remove the serum carefully with a sterile transfer pipette, and transfer to a clean sterile rubber- stoppered tube or to a screw-top, plastic vial/tube. Avoid transferring any red cells.

6. Label tube or plastic vial running up the length of the tube.
   a. **Do NOT** wrap the label around or "flag" the label by pressing ends together and extending from the tube.
   b. This includes ALL vacuum tubes for chemistry, hematology and serology; red top, SST, or purple (EDTA) top tubes would be the common ones.

6. Store tubes of labeled serum in a refrigerator until the specimens are ready to ship to the clinic laboratory or the Bureau of Laboratories.

Special Procedural Notes:

1. If sending whole blood in a vacuum tube, omit steps 2 and 4 (see page III-6).

2. If using serum separator tubes (gel in the bottom of the tube, SST) omit steps 2 and 4 above. Be sure the gel forms a distinct barrier between serum and clot.

3. During the summer months, pack all SST specimens with a cold pack since the gel can possibly breakdown at temperatures experienced during the summer months. The breakdown of the gel allows the red blood cells to "leak" into the serum contaminating the specimen and possibly rendering the specimen unacceptable for testing.

4. Always refer to the Bureau of Laboratories' Service Guide for complete instructions for specimen collection, specimen preparation, specimen storage and specimen transport for the specific laboratory test(s). Note: use current edition only.

5. Never use a gauge needle size smaller than a 23: this can cause hemolysis!

6. Always allow the blood to flow into a vacuum tube without adding additional pressure.

7. DO NOT take disposable tourniquet off until you have collected ALL of the tubes and the tubes are filled: when you take the tourniquet off once you are inside you run the risk of slow blood flow and/or short draws and/or insufficient blood volume.

Specimen Collection: Fingerstick Procedure
For Patients Greater Than 1 Year Old

Hemoglobin or General Laboratory Procedures

Precaution: Wear gloves and liquid resistant lab coat or apron while collecting and preparing blood for shipment.

Supplies: see Clinical Formulary on the intranet for approved supplies

1. Retractable safety lancets: see Clinical Formulary on the intranet for approved lancets for adults and pediatrics
2. 70% isopropyl alcohol pads or benzylkonium chloride pads
3. Sterile gauze pads (NO COTTON BALLS!)
4. Band-aids (optional)
5. Sharps disposal container (with stand or wall mounted)
6. Biohazard waste container

Personal Protective Equipment (PPE) Requirements:

1. Disposable gloves (required during collection)
2. Safety glasses (required if there is any chance of eye/mouth contamination during collection; strongly recommended if wear contact lens)
3. Liquid resistant lab coat or apron (required during collection)
4. Additional protection as recommended by OSHA and/or MSDS

Specimen Collection: You MUST have completed a DHEC Workshop and be rated proficient and competent BEFORE you can collect a fingerstick without direct supervision.

1. While putting on the appropriate PPE, explain the procedure to the patient and ask the patient to identify themselves or check a picture identification card; if a child, ask parent and/or guardian to state child's name.
   a. BEFORE putting on ANY PPE, wash hands with soap and water or use a hand sanitizer with at least 60% alcohol content.
   b. Order for putting on PPE: put eye protection on first (optional), then put on liquid resistant/impervious lab coat/apron, and then put on non-latex gloves.

2. Have all supplies within easy reach and all materials ready to use before performing the fingerstick procedure.

3. Place the sharps disposal container and waste container so you DO NOT have to cross over the patient or yourself when discarding contaminated items.

4. Wash hands with soap and water or use a hand sanitizer with at least 60% alcohol; put on disposable gloves.

5. Instruct the patient to rest his/her arm downward position for about 30 seconds to allow blood flow to the fingertips. If the patient's hand is cold, warm the hand:
   a. Gently massage the finger a few times from the base to the tip of the finger.
   b. Stroke the arm with gentle downward motion from the forearm to the hand.
   c. Ask the patient to briskly rub both hands together.
   d. Use a warm (not more than 105 degrees F.), moist towel on the hand for a couple of minutes.
   e. Ask the patient to wash his/her hands with warm water.

6. Select the middle or ring finger for puncture on the hand used least often.

7. **Do NOT** choose a puncture site on a fingertip that is callused, purple, scarred, swollen, or injured.

8. Use the less painful, fleshy area of the fingertip, just off center to the finger pad, slightly to the side.

9. Clean the puncture site with an alcohol pad or benzylkonium chloride pad.
   a. Wipe in one direction ONLY!
   b. Allow the alcohol or benzylkonium chloride to evaporate.
   c. **Do NOT** blow on the finger or fan the area.

10. **Do NOT** saturate the site with alcohol. Discard the used alcohol pad and wrapper in the regular trash can.

11. Allow the site to air dry completely.

12. Firmly hold the patient's finger, palm side up, between your thumb and index finger.

13. Puncture the site and dispose of the used lancet in the sharps container.
   a. Note: Puncture the finger with the lancet PERPENDICULAR to the ridge swirls on the finger.
   b. Place the lancet FIRMLY on the finger pad site BEFORE triggering the lancet.

14. Wipe away the first 2-3 drops of blood with the sterile gauze.

15. Apply gentle pressure every few seconds, about ½ inches from the puncture site.

16. Collect specimen in a microtube (bullet), or for dried blood spots, or a hemoglobin cuvette.

17. Have patient apply pressure on the site for 2-3 minutes to prevent leakage of blood under the skin and formation of a hematoma. When site is no longer bleeding, a bandage may be applied if desired.
   a. Ask the patient/or parent to hold the gauze on the finger.
   b. If the patient cannot do this, hold the finger for them.

18. Label specimen tube (s) with proper patient identification information; if not already done when getting supplies together.
   a. Name of patient/client (at least first name initial and full last name).
   b. MCI number or other unique identification number.
   c. Date collected, time collected and initials of person who collected specimen goes on the requisition/lab form.
   d. Note: if you use a HemoCue microcuvette, the frosted edge needs to have patient's last name at least and the date.

19. Complete ALL information on the test request/lab requisition form(s): DHEC 1332/1335.
   a. Name of patient/client (full first name and full last name).
   b. MCI number or other unique identification number.
   c. Date collected, time collected and initials of person who collected specimen.
   d. Test required
   e. Type of specimen

f. Ordering physician, APRN, RN, DIS
g. Test(s) requested
h. Sender Address or Sender code number
i. Any specimen instructions or other important information
j. Note: if you use a computer label, just add time and initials of person collecting specimen.
k. Note: if you use a computer label, be sure to place the computer label with all demographic information on copy 1, copy 2 and copy 3.
l. You will send the original top copy of the DHEC 1332/1335 with the specimen(s)
m. Retain the third copy for your files in the County Health laboratory.

20. Properly dispose of lancets (in biohazard puncture proof sharps container) and other contaminated materials used during fingerstick.
    a. Place all blood soaked material in the contaminated waste bag (Biohazard).
    b. Place all sharps in the sharps container and DO NOT fill above 2/3!
    c. DO NOT place any non-contaminated waste in the sharps container or Biohazard waste!

21. Remove PPEs in this order:
    a. Remove contaminated gloves.
    b. Wash hands with soap and water or with hand sanitizer with >60% alcohol.
    c. Remove any eye protection.
    d. Remove liquid impervious/resistant lab coat or apron.
    e. Wash hands with soap and water or with hand sanitizer with >60% alcohol.

22. BEFORE allowing the patient/client to leave, take the gauze off of the fingerstick site to ensure it has stopped bleeding.
    a. DO NOT wipe the area with gauze since this will initiate bleeding again (subcutaneous) and may cause a hematoma (bruise).
    b. DO NOT allow patient to get up from the chair, table, etc. without being physically at the side or in front of the patient/client: THIS IS A FALL PREVENTION MEASURE!

Specimen Collection: Fingerstick for Patients Greater Than 1 Year Old, or Heelstick Procedure for Patients Less Than 1 Year Old

Dried Blood Spots for Newborn Screening

Precaution: Wear gloves and liquid resistant lab coat or apron while collecting and preparing blood for shipment.

If a serum specimen cannot be obtained for HIV testing, dried blood spots from capillary blood may be substituted. The filter paper to be used in the collection of dried blood spots for HIV testing is attached to DHEC form 1339 or 1327, the HEMOGLOBIN ELECTROPHORESIS/HIV REQUEST FORM. The block, 230 BLOOD SPOT HIV 1, in the lower right-hand corner MUST be checked. Envelopes for mailing specimen are also available.

Sufficient blood MUST be obtained from the fingerstick puncture to fill each circle by making a single application of blood to the filter paper. The filter paper should touch only the drop of blood and should not be pressed against the skin around the puncture. Be sure that the filter paper is saturated through with blood. DO NOT superimpose blood drops! This leads to inaccurate results.

For infants less than one year, puncturing the heel is the standard recommended by CLSI.
Supplies: see Clinical Formulary on the intranet for approved supplies

1. Retractable safety lancets for infant or pediatric: see Clinical Formulary listings on the intranet for approved lancets
2. 70% isopropyl alcohol or benzylkonium chloride pads
3. Sterile gauze pads (NO COTTON BALLS!)
4. Band-aids (optional)
5. Sharps disposal container (with stand or wall mounted)
6. Biohazard waste container

Personal Protective Equipment (PPE) Requirements:
1. Disposable gloves (required during collection)
2. Safety glasses (required if there is any chance of eye/mouth contamination during collection; strongly recommend if wear contact lens)
3. Liquid resistant lab coat or apron (required during collection)
4. Additional protection as recommended by OSHA and/or MSDS

Specimen Collection: You MUST have completed a DHEC Workshop and be rated proficient and competent BEFORE you can collect a fingerstick/heelstick without direct supervision.
1. While putting on the appropriate PPE, explain the procedure to the patient and ask the patient to identify themselves or check a picture identification card; if a child, ask parent and/or guardian to state child's name.
   a. BEFORE putting on ANY PPE, wash hands with soap and water or use a hand sanitizer with at least 60% alcohol content.
   b. Order for putting on PPE: put eye protection on first (optional), then put on liquid resistant/impervious lab coat/apron, and then put on non-latex gloves.

2. Have all supplies within easy reach and all materials ready to use before performing the fingerstick procedure.

3. Place the sharps disposal container and waste container so you **DO NOT** have to cross over the patient or yourself when discarding contaminated items.

4. Wash hands with soap and water or use a hand sanitizer with at least 60% alcohol; put on disposable gloves.

5. Instruct the patient to rest his/her arm downward position for about 30 seconds to allow blood flow to the fingertips. If the patient's hand is cold, warm the hand:
   a. Gently massage the finger a few times from the base to the tip of the finger.
   b. Stroke the arm with gentle downward motion from the forearm to the hand.
   c. Ask the patient to briskly rub both hands together.
   d. Use a warm (not more than 105 degrees F.), moist towel on the hand for a couple of minutes.
   e. Ask the patient to wash his/her hands with warm water.
6. Select the middle or ring finger for puncture on the hand used least often.

7. **Do NOT** choose a puncture site on a fingertip that is callused, purple, scarred, swollen, or injured.

8. Use the less painful, fleshy area of the fingertip, just off center to the finger pad, slightly to the side.

9. Clean the puncture site with an alcohol pad or benzylkonium chloride pad.
   a. Wipe in one direction **ONLY**!
   b. Allow the alcohol or benzylkonium chloride to evaporate.
   c. **Do NOT** blow on the finger or fan the area.

10. **Do NOT** saturate the site with alcohol.
    Note: Discard the used alcohol pad and wrapper in the regular trash can.

11. Allow the site to air dry completely.

12. Firmly hold the patient's finger, palm side up, between your thumb and index finger.

13. Puncture the site and dispose of the used lancet in the sharps container.
    a. Note: Puncture the finger/heel with the lancet PERPENDICULAR to the ridge swirls on the finger.
    b. Place the lancet FIRMLY on the finger pad/heel site BEFORE triggering the lancet.

14. Wipe away the first 2-3 drops of blood with the sterile gauze.

15. Apply gentle pressure every few seconds, about ½ inches from the puncture site.

16. Collect specimen in a microtube (bullet), or for dried blood spots, or a hemoglobin cuvette.

17. Have patient apply pressure on the site for 2-3 minutes to prevent leakage of blood under the skin and formation of a hematoma. When site is no longer bleeding, a bandage may be applied if desired.
    a. Ask the patient/or parent to hold the gauze on the finger.
    b. If the patient cannot do this, hold the finger for them.

18. Label specimen tube (s) with proper patient identification information; if not already done when getting supplies together.
    a. Name of patient/client (at least first name initial and full last name).
    b. MCI number or other unique identification number.

c. Date collected, time collected and initials of person who collected specimen goes on the requisition/lab form.
d. Note: if you use a HemoCue microcuvette, the frosted edge needs to have patient's last name at least and the date.

19. Complete ALL information on the test request/lab requisition form(s): DHEC 1332/1335.
    a. Name of patient/client (full first name and full last name).
    b. MCI number or other unique identification number.
    c. Date collected, time collected and initials of person who collected specimen.
    d. Test required
    e. Type of specimen
    f. Ordering physician, APRN, RN, DIS
    g. Test(s) requested
    h. Sender Address or Sender code number
    i. Any specimen instructions or other important information
    j. Note: if you use a computer label, just add time and initials of person collecting specimen.
    k. Note: if you use a computer label, be sure to place the computer label with all demographic information on copy 1, copy 2 and copy 3.
    l. You will send the original top copy of the DHEC 1332/1335 with the specimen(s)
    m. Retain the third copy for your files in the County Health laboratory.

20. Properly dispose of lancets (in biohazard puncture proof sharps container) and other contaminated materials used during fingerstick.
    a. Place all blood soaked material in the contaminated waste bag (Biohazard).
    b. Place all sharps in the sharps container and **DO NOT** fill above 2/3!
    c. **DO NOT** place any non-contaminated waste in the sharps container or Biohazard waste!

23. Remove PPEs in this order:
    a. Remove contaminated gloves.
    b. Wash hands with soap and water or with hand sanitizer with >60% alcohol.
    c. Remove any eye protection.
    d. Remove liquid impervious/resistant lab coat or apron
    e. Wash hands with soap and water or with hand sanitizer with >60% alcohol.

24. BEFORE allowing the patient/client to leave, take the gauze off of the fingerstick site to ensure it has stopped bleeding.
    a. **DO NOT** wipe the area with gauze since this will initiate bleeding again (subcutaneous) and may cause a hematoma (bruise).
    b. **DO NOT** allow patient to get up from the chair, table, etc. without being physically at the side or in front of the patient/client: THIS IS A FALL PREVENTION MEASURE!

Special Procedural Notes for Dried Blood Spots:

1. When properly filled, the blood spot will be the same size on both sides of the filter paper.

2. **DO NOT** send the specimen if the circles are not completely filled—collect a second sample.
3. All the circles are needed. If tests have to be repeated or additional tests need to be run, all 5 circles are required.

Troubleshooting:

1. Failure to wipe off alcohol residue may dilute the specimen and adversely affect test results.

2. Puncturing the heel on posterior curvature will permit blood to flow away from puncture, making proper spotting difficult.

3. **DO NOT** lance on previous puncture site.

4. Use of a capillary tube is not recommended since application of blood with a capillary tube results in scratching and/or abrading the surface of the filter paper which adversely affects test results.

5. Avoid touching area within filter paper circles before blood is applied.

6. **DO NOT** place filter paper in the envelope until thoroughly dry.

7. INSUFFICIENT DRYING ADVERSELY AFFECTS TEST RESULTS!

Specimen Collection: Heel-stick Procedure
For Patients Less Than 1 Year Old

Hemoglobin or General Laboratory Testing or Newborn Screening

Precaution: Wear gloves and liquid resistant lab coat or apron while collecting and preparing blood for shipment.

Supplies: see Clinical Formulary on the intranet for approved supplies

1. Retractable safety lancets: Tenderfoot™ or lancet giving 1.0 mm – 2.0 mm depth
2. 70% isopropyl alcohol or benzylkonium chloride pads
3. Sterile gauze pads **(NO COTTON BALLS**!)
4. Band-aids (optional)
5. Sharps disposal container (with stand or wall mounted)
6. Biohazard waste container

Personal Protective Equipment (PPE) Requirements:

1. Disposable gloves (required during collection)
2. Safety glasses (required if there is any chance of eye/mouth contamination during collection; strongly recommend if wear contact lens)
3. Liquid resistant lab coat or apron (required during collection)
4. Additional protection as recommended by OSHA and/or MSDS

Personal Protective Equipment (PPE) Requirements:

1. Disposable gloves (required during collection)
2. Safety glasses (required if there is any chance of eye/mouth contamination during collection)
3. Liquid resistant lab coat or apron (required during collection)
4. Closed-toe shoes MUST be worn when collecting ANY blood specimens
5. Additional protection as recommended by OSHA and/or MSDS

Specimen Collection: You MUST have completed a DHEC Workshop and be rated proficient and competent BEFORE you can collect a fingerstick without direct supervision.

1. While putting on the appropriate PPE, explain the procedure to the patient and ask the patient to identify themselves or check a picture identification card; if a child, ask parent and/or guardian to state child's name.
   a. BEFORE putting on ANY PPE, wash hands with soap and water or use a hand sanitizer with at least 60% alcohol content.
   b. Order for putting on PPE: put eye protection on first (optional), then put on liquid resistant/impervious lab coat/apron, and then put on non-latex gloves.

2. Have all supplies within easy reach and all materials ready to use before performing the heelstick procedure.

3. Place the sharps disposal container and waste container so you **DO NOT** have to cross over the patient or yourself when discarding contaminated items.

4. Wash hands with soap and water or use a hand sanitizer with at least 60% alcohol; put on disposable gloves.

5. Instruct the parent/guardian to rest the leg of the infant in a downward position for about 30 seconds to allow blood flow to the foot. If the patient's foot is cold, warm the foot:
   a. Gently massage the foot/heel a few times from the base to the tip of the heel.
   b. Stroke the heel with gentle downward motion from the ankle to the toes.
   c. Ask the patient to briskly rub both hands together.
   d. Use a warm (not more than 105 degrees F.), moist towel on the heel for a couple of minutes.
   e. Ask the parent/guardian to wash child's foot/heel with warm water.

6. Select the heel for puncture.

   Note: Use **ONLY** the lateral or medial sides of the heel.

   Note: **DO NOT** use the plantar region of the foot or great toe.

7. **Do NOT** choose a puncture site on a heel that is callused, purple, scarred, swollen, or injured.

8. Get all microcuvettes ready and LABEL NOW!!! Use a #2 pencil or black Sharpie.

9. Clean the puncture site with an alcohol pad or benzylkonium chloride pad.
   a. Wipe in one direction ONLY!
   b. Allow the alcohol or benzylkonium chloride to evaporate.
   c. Do NOT blow on the finger or fan the area.

10. Do NOT saturate the site with alcohol.
    a. Remove excess alcohol with a clean gauze pad.
    b. Discard the used alcohol pad and wrapper in the regular trash can.

11. Allow the site to air dry completely.

12. Firmly hold the patient's heel between your thumb and index finger.

13. Puncture the site and dispose of the used lancet in the sharps container.
    a. Note: Puncture the heel with the lancet PERPENDICULAR to the ridge swirls on the heel.
    b. Place the lancet FIRMLY on the heel site BEFORE triggering the lancet.

14. Wipe away the first 2-3 drops of blood with the sterile gauze.

15. Apply gentle pressure every few seconds, about ½ inches from the puncture site.

16. Collect specimen in a microtube (bullet), or for dried blood spots, or a hemoglobin cuvette. LABEL NOW!!

17. Have patient apply pressure on the site for 2-3 minutes to prevent leakage of blood under the skin and formation of a hematoma. When site is no longer bleeding, a bandage may be applied if desired; elevate the leg higher than the heart.
    a. Ask the parent to hold the gauze on the puncture site.
    b. If the parent cannot do this, hold the heel elevated above the heart.

18. Label specimen tube (s) with proper patient identification information; if not already done when getting supplies together.
    a. Name of patient/client (at least first name initial and full last name).

b. MCI number or other unique identification number.
c. Date collected, time collected and initials of person who collected specimen goes on the requisition/lab form.
d. Note: if you use a HemoCue microcuvette, the frosted edge needs to have patient's last name at least and the date.

19. Complete ALL information on the test request/lab requisition form(s): DHEC 1332/1335.
    a. Name of patient/client (full first name and full last name).
    b. MCI number or other unique identification number.
    c. Date collected, time collected and initials of person who collected specimen.
    d. Test required
    e. Type of specimen
    f. Ordering physician, APRN, RN, DIS
    g. Test(s) requested
    h. Sender Address or Sender code number
    i. Any specimen instructions or other important information
    j. Note: if you use a computer label, just add time and initials of person collecting specimen.
    k. Note: if you use a computer label, be sure to place the computer label with all demographic information on copy 1, copy 2 and copy 3.
    l. You will send the original top copy of the DHEC 1332/1335 with the specimen(s).
    m. Retain the third copy for your files in the County Health laboratory.

20. Properly dispose of lancets (in biohazard puncture proof sharps container) and other contaminated materials used during heelstick.

    a. Place all blood soaked material in the contaminated waste bag (Biohazard).
    b. Place all sharps in the sharps container and **DO NOT** fill above 2/3!
    c. **DO NOT** place any non-contaminated waste in the sharps container or Biohazard waste!

21. Remove PPEs in this order:
    a. Remove contaminated gloves.
    b. Wash hands with soap and water or with hand sanitizer with >60% alcohol.
    c. Remove any eye protection.
    d. Remove liquid impervious/resistant lab coat or apron.
    e. Wash hands with soap and water or with hand sanitizer with >60% alcohol.

22. BEFORE allowing the patient/client to leave, take the gauze off of the puncture site to ensure it has stopped bleeding.
    a. **DO NOT** wipe the area with gauze since this will initiate bleeding again (subcutaneous) and may cause a hematoma (bruise).

    b. **DO NOT** allow parent/patient to get up from the chair, table, etc. without being physically at the side or in front of the parent/patient: THIS IS A FALL PREVENTION MEASURE!

Special Procedural Notes for Dried Blood Spots:

1. When properly filled, the blood spot will be the same size on both sides of the filter paper.

2. **DO NOT** send the specimen if the circles are NOT completely filled—collect a second sample.

2. All the circles are needed. If tests have to be repeated or additional tests need to be run, all 5 circles are required.

Troubleshooting:

1. Failure to wipe off alcohol residue may dilute the specimen and adversely affect test results.

2. Puncturing the heel on posterior curvature will permit blood to flow away from puncture, making proper spotting difficult.

3. **DO NOT** lance on previous puncture site.

4. Use of a capillary tube is not recommended since application of blood with a capillary tube results in scratching and/or abrading the surface of the filter paper which adversely affects test results.

5. Avoid touching area within filter paper circles before blood is applied.

6. **DO NOT** place filter paper in the envelope until thoroughly dry.

7. INSUFFICIENT DRYING ADVERSELY AFFECTS TEST RESULTS!

HEPATITIS C (HCV)
TOTAL ANTIBODY and QUANTITATION (RNA)

Note: This test is only available for DHEC HCV project sites or by special request

Principle:
To properly collect a blood specimen for Hepatitis C, total antibody testing by EIA and /or PCR Quantitation (RNA)

Patient preparation:
No special preparation

Supplies:
1. 1 Serum separator tube
2. Cold packs for shipping
3. DHEC form1332

Collection Procedure:
Precaution: Wear gloves when collection blood samples

1. Use serum separator tube, and Collect a full tube of blood
2. Allow to clot at room temperature and centrifuge within four hours of collection. Invert the tube after centrifugation to verify that the serum separator is intact and no cells enter the serum. If cells enter the serum, repeat centrifugation. Same specimen can be used for both tests

Specimen Handling:
1. Write the patient's name on the serum separator tube or use a patient label.
2 Complete a DHEC form 1332. See instructions on back of form for completing. Mark test # 224 and mark test 227 for the PCR Quantitation (RNA) only

Specimen Preservation and Transport
1. Place the sample in a container with enough cold packs to maintain a temperature of 2º to 8º C during shipment. Sample must arrive at the laboratory within 24 hours of collection.
2. Label the outside of the container as HCV Viral Load
3. See Section IV for appropriate shipping container, packaging and transport instructions.

Causes for Specimen Rejection:
1. Serum separator tube not used
2. Specimen not shipped with cold packs or specimen not cold on arrival.
3. Universal rejections, See Section I.

QuantiFERON-TB Gold (QFT) Collection Procedure

Principle:
To properly collect a blood specimen for QuantiFeron-TB Gold.

Supplies:

1. 3 QFT tubes
2. DHEC form 1335
3. Designated QFT shipper

Collection Procedure:

Precaution: Wear gloves when collecting blood samples

1. For each patient, collect 1mL of blood by venipuncture directly into each of the QFT blood collection tubes (3 tubes total).
    a. As 1mL tubes draw blood relatively slowly, keep the tube on the needle for 2-3 seconds once the tube appears to have completely filled, to ensure that the correct volume is drawn. *Note: The black mark on the side of the tubes indicates 1mL fill volume. QFT blood collection tubes have been validated for volumes from 0.8mL-1.2mL. If the level of blood is not close to the indicator line, it is recommended to obtain another blood sample.*
    b. If a butterfly needle is being used to collect blood, a "purge" tube should be used to ensure that the tubing is filled with blood prior to the QFT tubes being used.
2. Immediately after filling tubes, shake them ten (10) times just firmly enough to ensure the entire inner surface of the tube is coated with blood, to solubilize the antigens on the tube walls. Tubes should not be inverted but shook in an upright, vertical manner going from shoulder to hip in a chopping motion.
    a. Tube temperature should be between 17-25°C at the time of blood tube filling.
    b. Overly vigorous shaking may cause gel disruption and could lead to aberrant results.
3. Label tubes appropriately.
4. The tubes must be transferred to a 37°C ± 1°C incubator as soon as possible, and within 16 hours of collection. Prior to incubation, maintain the tubes at room temperature (22°C ± 5°C). Do not refrigerator or freeze the blood samples. *Note: There are incubators located at specific sites in the regions or samples can be placed on courier for incubation* ***HOWEVER*** *samples must be received within the acceptable 16 hours post-collection if incubation is to occur at the BOL.* If the blood is not incubated immediately after collection, re-mixing of the tubes by inverting 10 times must be performed immediately prior to incubation.
5. Incubate the tubes **UPRIGHT** at 37°C ± 1°C for 16-24 hours.
6. After incubation at 37°C, blood collection tubes may be held between 4-27°C for up to 3 days before further testing. Specimens should be shipped to the BOL Virology laboratory using the courier system and the designated boxes within the 3 day post-incubation time period.

Specimen Handling:

1. Use a patient label to properly label each QFT tube
2. Complete a DHEC 1335. See instructions on back of form for completing. Mark QuantiFeron Gold and complete incubation start and end time.

Specimen Preservation and Transport:

1. Specimens should be shipped and received within 16 hours of collection if not incubated in regions or within 3 days post-incubation.
2. Place the specimen instead designated QFT shipper (large white shipper with pink label) and ship at room temperature (17-25°C) via the state courier system.

Specimen Rejection:

1. Universal Rejections, See Section 1
2. Use of improper collection techniques and/or under or over filled collection tubes.
3. Sample not incubated within the proper incubation period after collection and/or samples under or over incubated.

ENTERIC PATHOGENS

Principle:

To properly collect a stool specimen for the isolation of the following enteric pathogens: *E coli 0157, Salmonella, Shigella, Yersinia, Campylobacter, Vibrio, Staphylococcus, Clostridium perfringens and Bacillus cereus.*

Patient Preparation:

No special preparation.

Supplies:

1. Wide-mouthed container.
2. Enteric kit with Cary-Blair transport media. See Page III-1 to order.
3. DHEC form 1335

Collection Precautions:

Wear gloves when collecting stool specimens.

Collection Procedure (Stool):

1. Collect stool in a clean (not necessarily sterile) wide-mouthed container with a tight-fitting lid. These containers must be free of preservatives and detergents.
2. **Do not collect specimen from toilet. Avoid contamination with urine**.
3. Infant specimens may be collected in a disposable diaper with plastic side facing inside.
4. Collect a walnut sized piece if stool is formed or 5-10 ml if stool is liquid.

Cary-Blair Transport media

Formed feces: use tongue depressor or spoon inside the lid to transfer walnut size portion of stool. Liquid feces: use pipette to transfer 5-10 ml of liquid stool to the transport media. Replace cap on tube and refrigerate until transported.

Specimen Handling:

1. Place a patient identification label on the transport medium
2. Complete a DHEC form 1335 to accompany specimen. See instructions on back of form. Be sure to complete additional test specific information

   Specimen Type/Source: Mark X by Feces
   Date Collected
   Organism Suspected: Indicate name of suspected organism
   NOTE: Routine culture includes testing for Salmonella, Shigella, Campylobacter, and E. coli 0157. Request for other specific pathogens must be indicated on the laboratory request form.
   Test Requested: Mark 508 Enteric Culture.

Specimen Preservation and Transport:

1. Ship specimens in transport media in cooler with cold packs. Specimen should be received within 48 hours of collection.
2. See Section IV for appropriate shipping container, packaging and transport instructions.

Specimen Rejection:

1. Specimen too old.
2. Use of improper transport media or transport conditions.
3. Insufficient quantity
4. Universal rejections, See Section I

NEISSERIA GONORRHOEAE

Principle:
To properly collect an eye culture, rectal culture and oropharyngeal culture for the diagnosis of *Neisseria gonorrhoeae.* To properly collect a cervical, urethral and vaginal culture in cases of assault or sexual abuse.

Patient Preparation:
For male urethral culture: The patient should not have voided for at least 1 hour before performing a culture, especially men without a discharge.

Supplies:
1. Sterile Dacron or Rayon swab
2. Sterile thin, flexible wire with Dacron or Rayon swab (males)
3. GC culture kit with Transgrow bottle for *N. gonorrhoeae* See Page III-1 to order.
4. DHEC form 1335
5. Speculum (cervical, vaginal)

Collection Precautions: (All specimens)
Wear disposable gloves And protective eye wear when collecting and handling specimens.
Note: Collect all specimens Monday - Wednesday. Do not ship for weekend delivery.

Collection Procedure: (Eye)
1. Touch a sterile swab to purulent discharge. If necessary, lower eyelid may be pulled down and the swab touched to the conjunctival mucosa.
2. Inoculate Transgrow bottles as described under Inoculation of Transgrow medium

Collection Procedure: (Rectal)
1. Have the patient bear down slightly for ease in insertion of swab.
2. Insert a sterile swab approximately 3 cm into the anal canal using lateral pressure to avoid entering any fecal mass. If gross fecal contamination of the swab occurs, it should be discarded into a biohazard container and a repeat specimen obtained.
3. Rotate the swab to sample crypts just inside the anal ring and allow the swab to remain in the anal area for several seconds for better absorption onto the swab.
4. Inoculate Transgrow bottles as described under Inoculation of Transgrow medium.

Collection Procedure: (Oropharyngeal [Throat])
1. Using a tongue blade to hold the tongue down, take a specimen directly from the back of the throat, carefully avoiding contact with teeth, cheeks, gums or tongue when inserting or removing the swab.
2. Rub a sterile swab over the back wall of the throat and tonsillar crypts.
3. Inoculate Transgrow bottles as described under Inoculation of Transgrow Medium.

Collection Procedure: (Cervical)
1. Obtain the cervical specimen with the aid of a speculum that has been moistened with water. Other lubricants may contain antibacterial agents.
2. Insert the speculum and if unable to visualize the cervical os, remove excess mucus with swab.
3. Insert another sterile swab into the endocervical canal approximately 2-3 cm. Move the swab in a rotary motion for a few seconds to permit absorption of the exudate. If the patient is pregnant, and there has been no vaginal bleeding, insert swab into the endocervix only until the tip is no longer visible and rotate gently for a few seconds).
4. Inoculate Transgrow bottles as described under inoculation of Transgrow medium.

Collection Procedure: (Vaginal) for Children and Hysterectomy Patients Only

1. Insert the speculum.
2. With a sterile swab obtain the specimen from the posterior vaginal vault.
3. Allow a few seconds for absorption of material.
4. If the hymen is intact, a swab of the vaginal orifice will suffice.
5. Inoculate Transgrow bottles as described under Inoculation of Transgrow medium.

Collection Procedure: (Urethral Culture - Females)

1. Massage the urethra against the pubic symphysis from vagina to orifice to express discharge.
2. If no discharge is evident, insert a sterile flexible thin wire swab approximately 2 cm into the urethra and rotate for several seconds.
3. Withdraw swab and inoculate Transgrow bottle as described under Inoculation of Transgrow

Collection Procedure: (Urethral - Males)

1. Insert a sterile flexible swab with a thin wire shaft 2-4 cm into the urethra.
2. Once inserted, rotate the swab gently to ensure contact with all urethral surfaces.
3. Leave inserted for 2-3 seconds for better absorption of material.
4. Withdraw swab and inoculate Transgrow bottle as described under Inoculation of Transgrow.

Inoculation of Transgrow Medium

1. Have Transgrow at **room temperature; check the expiration date** before inoculation.
2. Hold the bottle in an upright position. Remove the cap only when ready to inoculate.
3. Soak up excess moisture in the bottle with the specimen swab and roll the swab from side to side over the entire surface of the medium starting at the bottom of the bottle.
4. Remove swab from bottle and discard into a biohazard container.
5. Recap the bottle tightly.

Specimen Handling:

1. Place label with patient's name on back of Transgrow bottle where chocolate colored medium is layered. **Do not place label on clear side of bottle**. This window is needed to observe growth.
2. Complete a DHEC form 1335 to accompany specimen. See instructions on back of form. Be sure to complete test specific information.

   Specimen: Mark X by the appropriate type and write in the site.
   Was Culture Incubated Before Transport?: mark X in the appropriate space(s).
   Test Requested: Mark X in the appropriate space.

Specimen Preservation and Transport:

1. Place the Transgrow bottle in an upright position in an incubator set at 35°C as soon as possible after inoculation. **Never refrigerate the medium after inoculation as cold temperature will rapidly kill gonococci.** Incubate until ready to ship,
2. If an incubator is not available, make sure culture is shipped on the same day as collected.
3. If the specimen is collected on Friday and cannot be shipped until Monday, incubate over the weekend, but remove first thing Monday morning to prevent contaminant overgrowth.
4. Note: Do not ship for weekend delivery.

Specimen Rejection:

1. Transgrow media not used or Transgrow media expired.
2. Specimen in transit for more than 5 days.
3. Universal rejections, See Section I.

DIPHTHERIA

Principle:
To properly collect a throat swab for the culture of *C. diphtheria*

Patient Preparation:
No special preparation

Supplies:
1. Culturette swab kit containing Stuart's medium. Use form 1323 to order and indicate culturette in blank space on form.
2. DHEC form 1335

Collection Procedure for Throat Swab:
1. Shine a bright light if possible over the shoulder of the specimen collector into the oral cavity of the patient so that the swab can be guided to the posterior pharynx.
2. The patient is instructed to tilt his/her head back and breathe deeply.
3. Depress the tongue with a tongue depressor to help visualize the posterior pharynx. Use culturette kit. Do not use calcium alginate swabs.
4. Extend the swab to the back of the throat between the tonsillar pillars and behind the uvula.
5. Have the patient phonate a long aah which will lift the uvula and help to prevent gagging.
6. The tonsillar areas and posterior pharynx should be firmly rubbed with the swab.
7. Care should be taken not to touch the teeth, cheeks, gums or tongue when inserting or removing the swab to minimize contamination with normal mouth flora.
8. After collection, place the swab back into the culturette and break or squeeze the ampule. Note: Notify the DHEC Bacteriology Section (803-896-0805) when a diphtheria specimen is to be collected so that special isolation media can be prepared.

Specimen Handling
1. Place a patient label on a culturette swab kit.
2. Organism suspected: Indicate *Corynebacterium diphtheriae*.

Specimen Preservation and Transport
1. Store and ship culturette at room temperature. Note: Transport within 24 hours. Do not ship for weekend delivery.
2. See Section IV for appropriate shipping container, packaging and transport instructions.

Specimen Rejection
1. Ampule in culturette not crushed.
2. Universal rejections, See Section I.

MYCOBACTERIUM (TB)

Principle:

To properly collect a sputum or urine specimen for the diagnosing and monitoring of tuberculosis and other mycobacterial infections.

Supplies:

1. (a) Mycobacteriology collection kit (50 ml plastic sputum collection tube, metal can and cardboard mailing container) See Page III-1 to order.
   (b) Sterile screw cap container with a round opening of at least 2 inches for urine
2. DHEC form 1335
3. Particulate respirator (PR)

Collection Procedure: (All Specimens)

Wear Disposable Gloves and a Particulate Respirator When Collecting Specimens

Patient Preparation: (Sputum)

1. Explain to patient the importance of how to collect and handle a sputum specimen. Give the patient the sputum collection kit and COLLECTION OF SPUTUM SPECIMENS FOR MYCOBACTERIA (TB) sheet.
2. If the nurse must remain with the patient while he/she is coughing, the nurse should wear a particulate respirator.
3. Have the patient collect an early morning sputum sample.
4. Ask the patient to breathe deeply, exhale, and then cough deeply. Steam from a hot shower or a boiling kettle may help to stimulate the flow of secretions. Also, drinking several cups non alcoholic liquids will assist in raising sputum.
5. Patient should brush his/her teeth and/or rinse with water, not an antiseptic solution before obtaining the sputum specimen to reduce the overgrowth of mouth flora,
6. The patient should submit a series of three (3) sputum samples over a period of three days (one/day), if specimens are being collected for initial diagnosis.

Collection Procedure (Sputum)

1. Remove the cap from the sterile container without touching the inside of the container. This will avoid contamination of the specimen which results in having to submit another specimen.
2. Patient is instructed to take a deep breath, hold it momentarily and cough deeply from the deepest part of the chest. Saliva and nasal secretions which contain few acid-fast bacteria are not to be collected.
3. Instruct the patient to spit the sputum into the appropriate sterile container until at least 5 ml or 1 teaspoon is obtained. Replace cap on the container. A minimum of 5 ml is needed for culture.
4. Avoid soiling the outside of the container. If soiling does occur, wipe with a clean cloth wet with alcohol soap and water, or 1:10 bleach solution, and then wash hands.
5. Sputum specimens should be free of food particles and other extraneous material.
6. Place the cap on plastic tube or sterile container and screw to close tightly.

If patient is to collect sputum in the home, give patient sputum collection and mailing containers and instruction sheet on how to obtain a sputum sample.

Collection Procedure: (Urine)

The patient should submit a series of three (3) urine samples over a period of three days (one/day) if specimens are being collected for initial diagnosis.

Female- midstream voided:

1. Have patient thoroughly clean the urethral area with soap and water.
2. Instruct patient to sit on toilet, and to manually separate labia minora with one hand and keep them separated while voiding the first portion of urine into the toilet.
3. After several ml have passed, have patient collect the midstream portion into the specimen container without stopping the flow of urine. Try to avoid touching the lip or inside of the container with the hand.
4. Have the patient finish voiding into the toilet.
5. Amount of urine needed is 10 ml. Screw cap on plastic tube to close tightly.

Male-midstream voided:

1. Clean the glans with soap and water.
2. While holding foreskin retracted, begin voiding.
3. After several ml have passed collect the midstream portion into the appropriate container without stopping flow of urine.
4. Have the patient finish voiding into the toilet.
5. Amount of urine needed is 10 ml. Screw cap on plastic tube to close tightly.

For collection procedures on other specimens see chart on Collection and Shipment of Mycobacterial Specimens.

Specimen Handling:

1. Place a patient identification label on the 50 ml screw capped tube.
2. Complete a DHEC form 1335 to accompany specimen See instructions on back of form. Be sure to complete test specific information:

   Agent suspected: Enter the suspected agent
   Specimen source: Mark "X" by the appropriate source.
   Date & Time Collected:
   NOTE: All clinical specimens should be ordered using Test Code 601. Test Code 602 is reserved exclusively for laboratories that have isolated Mycobacteria and need them identified. Do not request drug susceptibility testing (Test Code 604) when submitting specimens from suspected new cases of tuberculosis. All initial isolates of M. tuberculosis will be tested for susceptibility to INH, rifampin, ethambutol, streptomycin and pyrazinamide.

Specimen Preservation and Transport: Sputum:

1. Refrigerate samples if shipping is delayed over 24 hours. This will decrease overgrowth of other microorganisms which delay culture results.
2. Place the collection tube in the metal can and close screw cap securely.
   Be sure neither plastic tube nor metal can are soiled with sputum or urine.
3. Wrap the completed DHEC 1335 laboratory form around the metal can. Be sure the date the specimen was collected is on the form. If the laboratory form is around the plastic tube instead of the metal can the laboratory must autoclave it before it can be handled.
4. Place the metal can in the pre-addressed, round cardboard mailing container
5. Mail specimen on the day it was collected, if possible, but do not mail specimen on Fridays. Refrigerate the carton until mailed.

Specimen Preservation and Transport Urine.

1. If specimen is urine, ship cold with cold packs.
   Place a plastic bag over the fiberboard carton and place in a Styrofoam cooler with cold packs for transportation.
2. Label outside of cooler as Urine for TB testing

Specimen Rejection:

1. Specimen broken or leaked in transit. Sterile body fluids may be processed with the approval of the Supervisor or Division Director.
2. Specimen > 5 days old.
3. Universal rejections, See Section I

SPECIMEN COLLECTION FOR CULTURE OF MYCOBACTERIA (TB)

SPECIMEN TYPE	TIME	AMOUNT	NUMBER	SPECIAL PROCEDURE
Sputum	Early AM On Waking	5-10 ml.	Series of 3 One/Day	Sputum-material coughed up from deep in lungs-not saliva
Urine	Early AM	Entire specimen, centrifuge 10 ml.	Series of 3 One/Day	Voided midstream specimen collected as aseptically as possible. Transport to lab immediately.
Gastric Washing	Early AM	10 ml.	1 or more as needed	No food after midnight. Pass 20-50 ml. sterile distilled water through stomach tube and draw off specimen in sterile tube.
Biopsy				No fixative or preservatives (saline only)
Feces		Formed-send walnut sized portion Liquid-send 10 ml.	1 or more as needed	
Sterile body fluids other than blood		10 ml.	1 or more as needed	
Swabs of drainage or other material				Use small amt of sterile saline to keep swab moist. **Do not use transport media. Swabs are not usually productive specimens for mycobacteria.**

Use a Mycobacteriology (TB) collection kit for all specimen types

VIRAL CULTURE
(STOOL)

Principle:
To properly collect a stool specimen for the identification of Enteroviruses and Rotavirus. Specimens should be collected as early as possible during illness.

Patient Preparation:
No special preparation.

Supplies:
1. Wide-mouthed container.
2. Tongue depressor
3. DHEC form 1335
4. Viral Transport media if collecting rectal swab. See Page III-1 to order.

Collection Precaution:
WEAR GLOVES WHEN HANDLING ALL STOOL SPECIMENS.

Collection Procedure (Stool)
1. Collect stool in a clean (not necessarily sterile) wide-mouthed container that can be covered with a tight-fitting lid. These containers should be free of preservatives and detergents.
2. DO NOT COLLECT SPECIMEN FROM TOILET. CONTAMINATION WITH URINE SHOULD BE AVOIDED.
3. Infant specimens may be collected in a disposable diaper with plastic side facing inside.
4. Collect Solid walnut sized piece if stool is formed. Collect 5-10 ml if stool is liquid
5. Place in a dry collection cup. Secure top with tape.
   NOTE: If stool cannot be collected, a rectal swab may be collected. Swab should be placed in viral transport medium

Specimen Handling:
1. Place a patient identification label on the container.
2. Complete a DHEC form 1335 to accompany specimen See instructions on back for completing. Be sure to complete test specific information:
   Specimen: Mark "X" in the appropriate space. If "Other" is marked, enter specimen site.
   Date of Onset: Enter month, day and year.
   Symptoms: Mark each symptom that applies. If "Other" is marked, write in symptom(s).
   Test Requested: Mark "X" in the appropriate space.
   Virus Suspected: Enter name of virus suspected.

Specimen Preservation and Transport:
1. Store in refrigerator and ship cold with cold packs within 24-48 hours after collection
2. If shipping is delayed, freeze at -70°C and ship on dry ice.
2. Transport medium is advantageous for virus isolation from swabs.

Specimen Rejection:
1. Specimen not cold on arrival
2. Calcium alginate swab used for collection of rectal swab.
3. Universal rejections, See Section I.

Viral Culture/Respiratory Culture/Herpes Culture
(Non-Stool Specimen)

Principle:
To properly collect a buccal swab, throat swab, NP swab, rectal swab, lower or upper respiratory specimen.

Patient Preparation:
No special preparation.

Supplies:
1. Swab with polyester tip. **Do not use calcium alginate swab or wooden shaft swab.**
2. Viral transport media. Store transport media at 2-25ºC until needed.
3. DHEC form 1335

Collection Procedure for Swab (NP, Throat, Buccal, Rectal, Genital Lesions, and/or Ulcers):
1. Swab desired area with appropriate polyester tipped swab.
2. Remove swab and immediately place into viral transport media. Break off swab shaft and close viral transport media container tightly.

Collection Procedure for CSF, lower respiratory, upper respiratory
1. Place fluid into sterile container. Fluid does not need to be placed into viral transport media or saline.

Specimen Handling:
1. Place a patient label on vial of viral transport media.
2. Complete a DHEC form 1335 to accompany specimen. See instructions on back for completing. Be sure to complete test specific information:
   - Specimen: Mark X in the appropriate space. If Other is marked, enter specimen site.
   - Date of Onset: Enter month, day and year.
   - Symptoms: Mark each symptom that applies. If Other is marked, write in symptom(s).
   - Test Requested: Mark X in the appropriate space.
   - Virus Suspected: Enter name of virus suspected.

Specimen Preservation and Transport
1. Store and ship viral transport tubes cold with cold packs within 24-48 hours after collection or at room temperature.
2. Fluids should be shipped cold with cold packs within 24-48 hours after collection.
3. See Section IV for appropriate shipping container, packaging and transport instructions.

Specimen Rejection
1. Use of calcium alginate swabs.
2. Use of wooden shaft swabs.
3. Universal rejections, See Section I.

BORDETELLA PERTUSSIS DETECTION BY PCR AND/OR CULTURE

Principle:

To properly collect nasopharyngeal swabs for the detection of *Bordetella pertussis* by PCR. and for culture of the organism.

I. PCR:

Collection Kit* will contain:

2 nasopharyngeal swabs with **polyester** tips for PCR
1 tube for PCR
1 Request Form (DHEC 1335)
1 instruction sheet

Instructions for collection of NP specimens:

1. Insert a thin swab with a flexible wire into the right nare. The swab is introduced flat and then pushed forward with gentle downward pressure on the lower nasal floor to the posterior wall of the nasopharynx. The swab is rotated for a few seconds before it is gently withdrawn. **Note: Throat swabs are not acceptable. Use swab with polyester tip. Do not use calcium alginate, cotton, or Rayon swab.**
2. Place the swab into the tube for PCR.
3. Repeat steps 1 and 2 for the left nare. Label the tube with the patient's name.
4. Complete 1 Request Form (DHEC 1335) to accompany the tubes. Include patient information, date collected, sender name and number, and mark the following boxes:
   Specimen Type/Source: Mark "X" on the 52 (NP) line.
   Organism Suspected: *Bordetella pertussis*
   For PCR requests: Check Test #115 *Bordetella pertussis* PCR in the **Molecular** box.
   If the patient has had antibiotic treatment, please note the drug and when treatment started.
5. Transport the PCR swabs on a cold pack in an insulated, crush-proof container. Be sure to include the request form. Send to the attention of Molecular Microbiology at the BOL.
6. Specimen Preservation and Transport: If shipping is delayed, the PCR tubes can be stored at 4° C. for 24-48 hours.

II. Culture**

Note: Please do not collect or ship for weekend delivery.

Collection supplies needed:

2 nasopharyngeal swabs with **polyester** tips.
1 tube of Regan-Lowe transport medium***
1 Request Form (DHEC 1335)
Instruction sheet

Instructions for collection of specimens:

1. Insert a thin swab with a flexible wire into the right nare. The swab is introduced flat and then pushed forward with gentle downward pressure on the lower nasal floor to the posterior wall of the nasopharynx. The swab is rotated for a few seconds before it is gently withdrawn. Use a second flexible wire swab in the same manner to sample the nasopharynx through the left nare.
2. Immediately immerse both swabs into a tube of Regan-Lowe transport medium and <u>tighten</u> the screw cap. The wire shaft of the swab can be bent so that it will fit into the tube. **Note: Regan-Lowe medium must be at room temperature before the tubes are inoculated.** Write the patient's name on the tube.

3. Complete a Request Form (DHEC 1335). Include patient information, date collected, sender name and number, and mark the following boxes:
   Specimen Type/Source: Mark "X" 52 (NP) line.
   Organism Suspected: *Bordetella pertussis*.
   Test requested: Mark "X" 510 for culture.
   Please indicate any antibiotic therapy the patient has received.
4. Place Regan-Lowe transport medium and request form in a biohazard bag into a receptacle. Address to the attention of Clinical Microbiology. Transport on **cold packs** for overnight delivery to the BOL by the DHEC courier. **Do not combine in a transport container with other specimen types.** If shipping is delayed, the Regan –Lowe tube can be incubated at 35° C for 24-48 hours. **Note: Do not collect or ship for weekend delivery.**

*For information on submitting specimens for PCR, please contact the DHEC Molecular Microbiology Laboratory at (803) 896-0824. For kits, please contact the DHEC BOL Supply Section at (803) 896-0913.

** For information on submitting specimens for culture, please contact the DHEC Clinical Microbiology Laboratory (803) 896-0805.

*** For Regan-Lowe transport medium, please contact the DHEC Media, Reagent and Glassware Section (803) 896-0817.

CHLAMYDIA/GC: GEN-PROBE APTIMA COMBO 2 PROCEDURE
(Endocervical, Male Urethral, Male/Female Rectal, Pharyngeal, Vaginal Specimens)

Principle:
To collect and appropriately handle specimens for nucleic acid amplification testing for Chlamydia and/or Gonorrhoeae testing from male urethral, female genital (cervical or endocervical or vaginal), pharyngeal and/or rectal sites using the APTIMA Unisex Swab Specimen Collection Kit for Endocervical and Male Urethral Swab Specimens for APTIMA/TIGRIS assay.

Patient Preparation:
See collection procedures below.

Supplies:
1. GC/ Chlamydia Gen-Probe supplies See Page III-1 to order.
2. Unisex Collection Kit. Use blue swab only for collecting both male and female specimens.
3. DHEC form 1332

Collection Procedure for Endocervical Swab Specimens:

1. The clinician collects the specimen from the cervical and endocervical area using the APTIMA Unisex Swab (green printing) designed to collect endocervical and urethral specimens for APTIMA/TIGRIS assay. **Please use the blue shaft swab for collection.**
2. Remove excess mucus from cervical os and surrounding mucosa using cleaning swab (white shaft in package with red printing). **Discard this swab!!!**
3. Insert specimen collection swab (blue shaft) into endocervical canal.
4. Gently rotate swab clockwise for 10 to 30 seconds in endocervical canal to ensure adequate sampling.
5. Withdraw swab carefully; avoid any contract with vaginal mucosa.
6. Remove foil cap from swab specimen transport tube and immediately place specimen collection swab into the transport tube.
7. Break off the swab at the scoreline. Use care to avoid splashing contents.
8. Re-cap swab specimen transport tube tightly.
9. Place a label with patient name, date taken, and anatomic site (cervical, Cx) on the tube.
10. Complete a laboratory test requisition for each specimen with the test(s) requested and the appropriate anatomic site (cervical, Cx) indicated on the form.
11. Specimen can be stored in the refrigerator (2-8 degrees C) or room temperature (9 to 30 degrees C) prior to transport to the Bureau of Laboratories, 8231 Parklane Road, Columbia, SC 29223.
12. Specimens need to be stored in an upright position in a rack so that the buffer is in contact with the swab.
13. The specimen is good for 60 days.
14. If longer storage is needed, freeze at -20 to -70 degrees C for up to 12 months after collection.

Collection Procedure for Vaginal:

1. The clinician collects the specimen from the vaginal area using the APTIMA Vaginal Unisex Swab (orange printing) designed to collect vaginal specimens for APTIMA/TIGRIS assay. **Please use the pink shaft swab for collection.**
2. Carefully insert the swab into vagina about 2 inches inside the opening of the vagina and gently rotate swab 10-30 seconds.
3. Make sure the swab touches the walls of the vagina so that the moisture is absorbed by the swab and then withdraw the swab without touching the skin.
4. Remove foil cap from swab specimen transport tube and immediately place specimen collection swab into the transport tube.
5. Break off the swab at the scoreline.
6. Tightly screw the cap onto the tube.
7. Place a label with patient name, date taken, and anatomic site (vaginal, vag) on the tube.
8. Complete a laboratory test requisition for each specimen with the test(s) requested and the appropriate anatomic site (vaginal, vag) indicated on the form.
9. Specimen can be stored in the refrigerator (2-8 degrees C) or room temperature (9 to 30 degrees C) prior to transport to the Bureau of Laboratories, 8231 Parklane Road, Columbia, SC 29223.
10. Specimens need to be stored in an upright position in a rack so that the buffer is in contact with the swab.
11. The specimen is good for 60 days.
12. If longer storage is needed, freeze at -20 to -70 degrees C for up to 12 months after collection.

Collection Procedure for Male Urethral:

Patient should not have urinated for at least 1 hour prior to collection.

1. The clinician collects the specimen from the urethral area using the APTIMA Unisex Swab (green printing) designed to collect endocervical and urethral specimens for APTIMA/TIGRIS assay. **Please use the blue shaft swab for collection.**
2. Insert the specimen collection swab (blue shaft swab in the package with the green printing) 2 to 4 cm into the urethra.
3. Gently rotate the swab clockwise for 2 to 3seconds in the urethra to ensure adequate sampling.
4. Withdraw the swab carefully.
5. Remove foil cap from swab specimen transport tube and immediately place specimen collection swab into the transport tube.
6. Carefully break off the swab at the scoreline. Use care to avoid splashing contents.
7. Re-cap the swab specimen transport tightly.
8. Place a label with patient name, date taken, and anatomic site (male urethral) on the tube.
9. Complete a laboratory test requisition (DHEC 1332) for each specimen with the test(s) requested and the appropriate anatomic site (male urethral) indicated on the form.
10. Specimen can be stored in the refrigerator (2-8 degrees C) or room temperature (9 to 30 degrees C) prior to transport to the Bureau of Laboratories, 8231 Parklane Road, Columbia, SC 29223.
11. Specimens need to be stored in an upright position in a rack so that the buffer is in contact with the swab.
12. The specimen is good for 60 days.
13. If longer storage is needed, freeze at -20 to -70 degrees C for up to 12 months after collection.

Collection Procedure for Pharyngeal: *Since this collection kit is designed to collect endocervical specimens, included is a white shaft "cleaning" swab which is NOT to be used for pharyngeal or rectal specimen collection.*

1. The clinician collects the specimen from the pharyngeal area using the APTIMA Unisex Swab (green printing) designed to collect endocervical and urethral specimens for APTIMA/TIGRIS assay. **Please use the blue shaft swab for collection.**
2. Swab area between the tonsillar pillars and the region posterior to the pillars.

3. Remove foil cap from swab specimen transport tube and immediately place specimen collection swab into the transport tube.
4. Break off the swab at the scoreline.
5. Place a label with patient name, date taken, and anatomic site (throat) on the tube.
6. Complete a laboratory test requisition for each specimen with the test(s) requested and the appropriate anatomic site (throat) indicated on the DHEC Form 1332.
7. Specimen can be stored in the refrigerator (2-8 degrees C) or room temperature (9 to 30 degrees C) prior to transport to the Bureau of Laboratories, 8231 Parklane Road, Columbia, SC 29223.
8. Specimens need to be stored in an upright position in a rack so that the buffer is in contact with the swab.
9. The specimen is good for 60 days.

Collection Procedure for Male Rectal: *Since this collection kit is designed to collect endocervical specimens, included is a white shaft "cleaning" swab which is NOT to be used for pharyngeal or rectal specimen collection.*

1. The clinician collects the specimen from the rectal area using the APTIMA Unisex Swab (green printing) designed to collect endocervical and urethral specimens for APTIMA/TIGRIS assay. **Please use the blue shaft swab for collection.**
2. Rectal:
   a. **Asymptomatic men:** moisten swab with sterile saline and insert into anus and rectum and leave for 20 seconds.
   b. **Symptomatic men:** swab rectal mucosa through the anoscope.
   c. **Asymptomatic women:** moisten swab with sterile saline and insert into anus and rectum and leave for 20 seconds.
   d. **Symptomatic female:** swab rectal mucosa through the anoscope.
3. Remove foil cap from swab specimen transport tube and immediately place specimen collection swab into the transport tube.
4. Break off the swab at the scoreline.
5. Place a label with patient name, date taken, and anatomic site (rectal, rec) on the tube.
6. Complete a laboratory test requisition for each specimen with the test(s) requested and the appropriate anatomic site (rectal, rec) indicated on the form.
7. Specimen can be stored in the refrigerator (2-8 degrees C) or room temperature (9 to 30 degrees C) prior to transport to the Bureau of Laboratories, 8231 Parklane Road, Columbia, SC 29223.
8. Specimens need to be stored in an upright position in a rack so that the buffer is in contact with the swab.
9. The specimen is good for 60 days.

Collection for Male and Female Urine Specimens

Patient should not have urinated for at lease 1 hour prior to specimen collection.

1. Direct patient to provide first-catch urine (approximately 20 to 30 ml of initial urine stream) into urine collection cup free of any preservatives. Collection of larger volumes of urine may result in specimen dilution that may reduce test sensitivity. Female patients should not cleanse labial area prior to providing specimen.

2. Remove cap from urine specimen transport tube and transfer 2 ml of urine into urine specimen transport tube using disposable pipette provided. The correct volume of urine has been added when fluid level is between black fill lines on urine specimen transport tube label.
3. Re-cap urine specimen transport tube tightly. This is now known as the "processed urine specimen."
4. See *Specimen Transport and Storage* below.

Specimen Handling:

Complete DHEC form 1332 to accompany specimen
See instructions on back for completing.
Be sure to complete test specific information**.**

Specimen Preservation and Transport

A. Swab

1. After Collection, transport and store swab in swab specimen transport tube at 2°C to 30°C until tested.
2. Specimens must be assayed with the GEN-PROBE APTIMA Combo 2 Assay within 60 days of collection. If longer storage is needed, freeze at -20°C to -70°C for up to 12 months after collection.

B. Urine

1. After collection, transport the processed urine specimens in the GEN-PROBE APTIMA Combo 2 Assay urine specimen transport tube at 2°C or 30°C and store at 2°C or 30°C until tested. Processed urine specimens should be assayed with the APTIMA Assay within 30 days of collection. If longer storage is needed, freeze at -20°C -or-70°C for up to 90 days after collection.
2. Urine samples that are still in primary collection container must be transported to lab at 2°C or 30°C. Transfer urine sample into APTIMA Assay urine specimen transport tube within 24 hours of collection. Store at 2°C or 30°C and test within 30 days.
3. See Section IV for appropriate shipping container, packaging and transport instructions.

Specimen Rejection:

1. No swab in tube, 2 swabs in tube, or improper (non-blue) swab used.
2. Universal rejections, See Section I, *SCDHEC, Bureau of Laboratories Services Guide*.
3. Note: specimens collected with this system cannot be used for culture.

References:

1. Probetec Swab Specimen Collection and Handling by Campbell, D., SFDPH Micro Lab and Engelman, J., M.D., City Clinic, 1/2002.
2. APTIMA Swab Specimen Collection Guide; Gen-Probe Incorporated, San Diego, CA 92121.
3. City and County of San Francisco, Dept. of Public Health, City Clinic Branch Laboratory, revised 10/09.

SKIN SCRAPINGS FOR SCABIES

Principle:

Diagnosis of scabies can be confirmed by demonstration of the mites, eggs or scybala (fecal pellets). Because the mites are located under the surface of the skin, scrapings must be taken from the infected area.

Supplies:

1. Mineral oil
2. Sterile scapel blade
3. Clean glass slide and coverslip
4. Applicator stick
5. DHEC form1335
6. Cardboard slide mailer (holds 2 slides)
7. Biohazard bag

Safety Precautions:

Specimens must be handled with care**. *Sarcoptes scabei* is highly contagious. Wear gloves and lab coat while collecting specimens.**

Collection Procedure:

1. Place a drop of mineral oil on a sterile scalpel blade. (Mineral oil is preferred over potassium hydroxide solution or water. Mites will adhere to the oil and oil will not dissolve fecal pellets).
2. Allow some of the oil to flow onto the papule.
3. Scrape vigorously six or seven times to remove the top of the papule. (There will be tiny flecks of blood in the oil).
4. Transfer the oil and scraped material to a glass slide. (An applicator stick can be used).
5. Add **one or two drops** (no more than 2) of mineral oil to the slide and stir the mixture.
6. Place a cover slip on the slide.

Specimen Handling:

1. Place a patient identification label on the edge of the glass slide
2. Complete DHEC form 1335 to accompany specimen. See instructions on back for completing.

Specimen Preservation and Transport:

1. Place slide(s) in cardboard slide mailer. or plastic slide box (not supplied)
2. Secure mailer with rubber band and place mailer in Biohazard bag.
3. Store and ship at room temperature
4. See Section IV for appropriate shipping container, packaging and transport instructions.

Specimen Rejection:

1. Too much oil used (more than 2)
2. Universal rejections, See Section I

Transporting and Shipping Infectious Substances A and B
(Updated May 26, 2016)

Patient specimens and infectious substances must be properly packaged and labeled to protect the employees transporting and receiving the materials.

The US Department of Transportation (DOT) and the US Postal Service (USPS) harmonized their regulations with the International Air Transporter Association (IATA) regulations during 2006. IATA is a private organization for air carriers. Most air transporters in the United States belong to this organization and follow the IATA *Dangerous Goods Regulations*. The IATA regulations are taken from the International Civil Aviation Organization (ICAO) Technical Instructions for the Safe Transport of Dangerous Goods by Air.

All groups now use the same classification system for infectious substances. If infectious substances are packaged and labeled to meet the IATA regulations, the package will meet or exceed the requirements for US DOT and the US Postal Service. However, each air transporter may have limitations on dangerous goods they will or will not transport. These limitations may be found in the IATA *Dangerous Goods Regulations*, which are updated annually. The US Postal Service and some IATA members no longer accept Category A infectious substances. There may also be some differences in the amount of infectious substance allowed in a package.

Patient specimens from most of the SC Health Departments and many of the SC hospitals are transported to the SC DHEC Bureau of Laboratories through the SC State Courier System. The SC State Courier system picks up and delivers courier mail from over 500 locations in SC every evening. As a general rule, the SC State Courier asks that USPS regulations be followed for the courier mail in regard to packaging and labeling. A list of SC State Courier Pickup Locations may be found at:
http://www.gs.sc.gov/amail/docs/IMS-customers.pdf

Training

Employees must be trained to properly package and ship infectious substances.

Employees who **only** ship infectious substances, category B, must be trained on proper packaging and labeling for category B infectious substances.

For employees who will package and ship infectious substances, category A, the training is more involved and must include:

- An overview of the regulatory requirements
- Function specific training on the activities the employee will be responsible for, such as classification of infectious substances, packaging, labeling the outside container and completing shipping documentation.
- Safety training to include understanding the hazards of the infectious agent, safe handling and emergency response procedures.
- Security awareness

For employees who ship category A infectious substances, the employer must certify the employees training as adequate, and maintain a record of training which includes:

- The individual's name
- The most recent training completion date
- A description, copy or reference to training materials used
- The name and address of the organization providing the training
- A test, which was completed satisfactorily, to verify the employee understood the training.

Training records must be retained for a minimum of thirty-six months.

Retraining must be conducted:

- within 24 months of initial training under IATA regulations
- within 36 months of initial training under DOT regulations

Exempt Materials

The following items are exempt from the shipping regulations for infectious substances, but must be packaged to avoid leaking during shipping and may require a special label.

- Specimens in which any pathogens have been neutralized or inactivated
- Specimens/samples **known** to not contain infectious substances
- Specimens/samples which only contain micro-organisms which are non-pathogenic for humans and animals
- Dried blood spots and fecal occult blood samples
- Environmental samples (food and water) that are not considered to pose a significant health risk
- Organs for transplant and blood for transfusion

Shipping Pap Tests Specimens (Liquid Based Monolayer)

(This information is for SC DHEC Health Departments shipping to the contracted laboratory; Bureau of Laboratories no longer provides this test.)

Ship as instructed by the contractor. No hazard labeling is required on the outside of the box.

Shipping Newborn Screening Blood Spots

1. Allow blood spots to **AIR DRY** thoroughly on a level non-absorbent surface such as a plastic coated test tube rack at least 4 hours at room temperature.

2. Place **dried** filter paper form(s) into the provided mailing envelope. Mail the specimen within 24 hours. No additional labeling is required on the outside of the envelope. The dried blood spots cannot leak or spill and are exempt from the dangerous goods/hazardous materials shipping regulations. **The envelopes provided to ship dried blood spots should not be used to ship any other type of patient specimen.**

3. Ship by state courier or first class US Mail. No additional labeling is required on the outside of the envelope.

International Air Transport Association (IATA) shipping regulation changes effective Jan. 1, 2016, which relate to infectious substances:

(The following information was taken from the "Significant Changes and Amendments to the 57th Edition of the *Dangerous Goods Regulations* by IATA.)

- **Packing**
  5.0.1.5 – an additional paragraph has been added to clarify that an overpack containing dangerous gods may also contain packages of goods not subject to the regulations.
- **Documentation**
  8.1.6.9.2 – clarification has been added to identify that it is acceptable to show on the Shipper's Declaration the number of packages by use of numbers or words.

Some IATA Definitions:

BIOLOGICAL PRODUCTS: Are those products derived from living organisms which are manufactured and distributed in accordance with the requirements of appropriate national authorities, which may have special licensing requirements, and are used either for prevention, treatment, or diagnosis of disease in humans or animals, or for development, experimental or investigational purposes related thereto. They include, but are not limited to, finished or unfinished products such as vaccines.

CARBON DIOXIDE, SOLID (DRY ICE): Carbon dioxide, solid (dry ice) is produced by expanding liquid carbon dioxide to vapor and "snow" in presses that compact the product into blocks. It is used primarily for cooling and due to its very low temperature (about -79 C) can cause server burns to skin upon direct contact. When Carbon dioxide, solid (dry ice) converts (sublimates) directly to gaseous carbon dioxide it takes in heat from its surroundings. The resulting gas is heavier than air and can cause suffocation in confined areas as it displaces air. Packages containing Carbon dioxide, solid (dry ice) must be designed and constructed so as to prevent build-up of pressure due to the release of carbon dioxide gas.

CONSIGNEE: Any person, organization or government which is entitled to take delivery of a consignment.

CULTURES: Cultures are the result of a process by which pathogens are intentionally propagated. This definition does not include patient specimens as defined in 3.6.2.1.4.

DANGEROUS GOODS: Articles or substances which are capable of posing a risk to health, safety, property or the environment and which are shown in the list of dangerous goods in theses Regulations or which are classified according to the Regulations.

EXCEPTION: A provision in these Regulations which excludes a specific item of dangerous goods from the requirements normally applicable to that item.

EXEMPTION: Authorization issued by an appropriate national authority of all States concerned providing relief from the provisions of these Regulations. The requirements for exemptions are given in 1.2.6.

INFECTIOUS SUBSTANCES: are substances which are known or are reasonably expected to contain pathogens. Pathogens are defined as microorganisms (including bacteria, viruses, rickettsiae, parasites, fungi) and other agents such as prions, which can cause disease in humans or animals.

INNER RECEPTACLE: Are receptacles which require an outer packaging in order to perform their containment function.

OVERPACK: An enclosure used by a single shipper to contain one or more packages and to form one handling unit for convenience of handling and stowage. Dangerous

goods packages contained in the overpack must be properly packed, marked, labeled and in proper condition as required by these Regulations. For cooling purposes, an overpack may contain Carbon dioxide, solid (dry ice), provided that the overpack meets the requirements of Packing Instruction 954. (A Unit Load Device is not included in this definition.)

PACKAGE: (Non-Radioactive Material). The complete product of the packing operation consisting of the packaging and contents prepared for transport.

PACKAGING: (Non-Radioactive Material). Receptacles and any other components or materials necessary for the receptacle to perform its containment function and to ensure compliance with the minimum packing requirements of these Regulations.

PACKING: The art and operation by which articles or substances are enveloped in wrappings and/or enclosed in packaging or otherwise secured.

PATIENT SPECIMENS are those collected directly from humans or animals, including, but not limited to, excreta, secreta, blood and its components, tissue and tissue fluid swabs, and body parts being transported for purposes such as research, diagnosis, investigational activities, disease treatment and prevention.

PROPER SHIPPING NAME: The name to be used to describe a particular article or substance in all shipping documents and notifications and, where appropriate, on packaging.

RECEPTACLE: A containment vessel, including closures, for receiving and holding substances or articles.

SHIPMENT: The specific movement of a consignment from origin to destination.

UN NUMBER: The four digit number assigned by the United Nations Committee of Experts on the Transport of Dangerous Goods to identify a substance or a particular group of substances. (The prefix "UN" must always be used in conjunction with these numbers.)

Additional Explanation

The term **select agent** refers to microorganisms, identified by a panel of experts, which could be used for bioterrorism. A complete list of select agents and toxins may be found on the CDC Select Agent Program's web page
http://www.cdc.gov/od/sap/docs/salist.pdf

Classifying Infectious Substances

Infectious substances are divided into 2 categories – A and B.

Category A: An infectious substance which is transported in a form that, when exposure to it occurs, is capable of causing permanent disability, life-threatening or fatal disease in otherwise healthy humans or animals. Indicative examples of substances that meet these criteria are given in Table 3.6.D. (pages 7 & 8)
[Note: A swab placed in a genprobe bottle would not meet the IATA definition of a culture and would be classified as an Infectious Substance, Category B.]

Category B: An infectious substance which does not meet the criteria for inclusion in Category A. Infectious substances in Category B must be assigned to UN 3373.

Additional Information on classifying infectious substances
IATA regulations no longer require that **all** cultures, which cause disease in humans, be shipped as Infectious substances, Category A.

Most cultures and patient specimens shipped to the Bureau of Laboratories from SC hospitals and DHEC Health Departments will now be classified as Infectious Substance, Category B.

Table 3.6.D (pages 7 and 8) was developed as a guidance document to give examples of infectious agents that should be classified as category A, infectious substances regardless of the type of specimen.
[**Note**: This table is not exhaustive. Infectious substances, including new or emerging pathogens, which do not appear in the table but which meet the same criteria must be assigned to category A.]

Guidance Documents are available on the internet to assist with classification of infectious substances.

Table 3.6.D from IATA Dangerous Goods Regulations
Indicative Examples of Infectious Substances Included in Category A in Any Form
Unless Otherwise Indicted (3.6.2.2.2.1) (No changes from 2015)
[NOTE: "Select Agents or Toxins" are shown in red font]

UN Number and Proper Shipping Name	Micro-organism
UN 2814 Infectious substance affecting humans	*Bacillus anthracis* (cultures only) *Brucella abortus* (cultures only) *Brucella melitensis* (cultures only) *Brucella suis* (cultures only) *Burkholderia mallei* - *Pseudomonas mallei* - Glanders (cultures only) *Burkholderia pseudomallei* - *Pseudomonas pseudomallei* (cultures only) *Chlamydia psittaci* - avian strains (cultures only) *Clostridium botulinum* (cultures only) *Coccidioides immitis* (cultures only) *Coxiella burnetii* (cultures only) Crimean-Congo hemorrhagic fever virus Dengue virus (cultures only) Eastern equine encephalitis virus (cultures only) Escherichia coli, verotoxigenic (cultures only) Ebola virus Flexal virus *Francisella tularensis* (cultures only) Guanarito virus Hantaan virus Hantavirus causing hemorrhagic fever with renal syndrome Hendra virus Hepatitis B virus (cultures only) Herpes B virus (cultures only) Human immunodeficiency virus (cultures only) Highly pathogenic avian influenza virus (cultures only) Japanese Encephalitis virus (cultures only) Junin virus Kyasanur Forest disease virus Lassa virus Machupo virus Marburg virus Monkeypox virus *Mycobacterium tuberculosis* (cultures only) Nipah virus Omsk hemorrhagic fever virus Poliovirus (cultures only) Rabies virus (cultures only) *Rickettsia prowazekii* (cultures only) *Rickettsia rickettsii* (cultures only) Rift Valley fever virus (cultures only)

	Russian spring-summer encephalitis virus (cultures only) Sabia virus *Shigella dysenteriae* type 1 (cultures only) Tick-borne encephalitis virus (cultures only) Variola virus Venezuelan equine encephalitis virus (cultures only) West Nile virus (cultures only) Yellow fever virus (cultures only) *Yersinia pestis* (cultures only)
UN 2900 Infectious substances affecting animals	African swine fever virus (cultures only) Avian paramyxovirus Type 1 - Newcastle disease virus (cultures only) Classical swine fever virus (cultures only) Foot and mouth disease virus (cultures only) Goatpox virus (cultures only) Lumpy skin disease virus (cultures only) *Mycoplasma mycoides* - Contagious bovine pleuropneumonia (cultures only) Peste des petits ruminants virus (cultures only) Rinderpest virus (cultures only) Sheep-pox virus (cultures only) Swine vesicular disease virus (cultures only) Vesicular stomatitis virus (cultures only)

Examples of Classifying Infectious Substances

Material	**Infectious Substance, category A**	**Infectious Substance, category B**
Culture of HIV virus	**X**	
Tube of blood from a HIV+ person		**X**
Tube of blood from a person infected with *Bacillus anthracis*		**X**
Known culture of *Salmonella spp.*		**X**
Known culture of *Bacillus anthracis* (must also meet Select Agent shipping requirements)	**X**	
Tube of blood drawn from patient infected with Ebola virus	**X**	
Animal head shipped for rabies testing		**X**

Proper Shipping Names and UN Numbers

Once an infectious material has been classified, then the proper shipping name must be determined. The proper shipping name is required on the outer packaging. The UN number must also be on the outside packaging. The table below lists the proper shipping names and UN numbers needed to ship infectious substances, categories A and B.

Proper Shipping Names

Classification	**Proper shipping name**	**UN number**
Infectious substance, Category A (infects humans & may infect animals)	Infectious substance, affecting humans	UN 2814
Infectious substance, Category A (only infects animals)	Infectious substance, affecting animals	UN 2900
Infectious substance, category B	Biological substance, Category B	UN 3373 **[Note: The state courier will not require the UN3373 marking, but it may be used.]**

Packing Infectious Substances for Transport

All packaging is based on a "triple" receptacle shipper. Most air transporters in the United States are IATA members and follow the IATA regulations for packaging and labeling infectious substances.

- Infectious substances, category A, must be packaged to meet IATA packing instruction **620** (for air transport**)**.

- Infectious substances, category B must be packaged to meet IATA packing instruction **650** (for air transport**)**.

A <u>primary receptacle</u> is the container (e.g., tube vial, bottle) that holds the specimen.

- The primary receptacle must be securely sealed and leak proof (screw top tubes must have a piece of waterproof tape around the top to prevent the top from coming loose in transit).

- The primary receptacle must be surrounded by absorbent material capable of taking up the entire liquid contents.

- The primary receptacle must be packed in the secondary receptacle in such a way that it will not break.

- IATA regulations allow 1 liter in a primary receptacle for infectious substances on cargo aircraft. The outer packaging must not contain more than 4 liters.

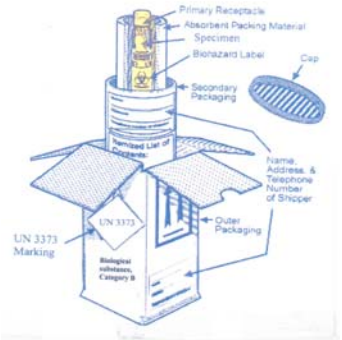

Packaging and Labeling for an Infectious substance, category B

Proper shipping name is "Biological substance, category B"

NOTE: Most DHEC shippers are designed for a **maximum of 50 ml** of liquid infectious substance. Remember, there must always be adequate absorbent materials to absorb the amount of liquid in a primary receptacle.

<u>Secondary packaging</u> is the receptacle into which a primary receptacle and the absorbent and cushioning material are placed.

- The secondary packaging must be leak proof and securely sealed.

- The secondary packaging must be placed in the outer packaging so that it does not move.

Note: A ziplock biohazard bag may serve as the secondary receptacle for a patient specimen if transport is by ground with the state courier system.

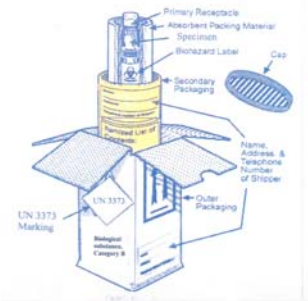

Packaging and Labeling for an Infectious substance, category B

Proper shipping name is "Biological substance, category B"

Itemized List of Contents

- An itemized list of contents is required.

- The itemized list is placed OUTSIDE the secondary container. The laboratory form should also be placed OUTSIDE the secondary container.

- DO NOT place documents inside the secondary container.

- Never place cold packs or dry ice inside the secondary packaging! Dry ice will cause a pressure build up and the secondary container may explode!!!

Itemized List used by the Bureau of Laboratories

Shipped from: SC DHEC Bureau of Laboratories
8231 Parklane Road
Columbia, SC 29223
Emergency Contacts: Brian Gootee or Dr. Shahiedy Shahied
Emergency Telephone: (803) 767-8110 or (803) 240-9976

Shipped to: _____

_____

_____

Shipping Temperature
_____ ambient
_____ cold packs
_____ dry ice

Next day delivery required
____ No
____ Yes

Specimen or Culture Examples - tube of human blood or slant with *Mycobacterium tuberculosis*	**Number of tubes or plates**	**Volume in each tube or plate**	**Total volume**	**Proper shipping classification (circle only one)**
				Infectious substance, category A **or** Infectious substance, category B
				Infectious substance, category A **or** Infectious substance, category B

<u>Outer packaging</u> is the receptacle into which the secondary receptacle, along with cushioning materials, is placed.

- The outer packaging must be rigid (effective 1-1-2005).

- The outer packaging bears the addressing information along with all required markings and labels. The full name and address of the shipper and the consignee **must** be on the outside packaging. The outside packaging **must** also have the name and telephone number of a person who is knowledgeable about the contents of the shipment. This is important emergency information in the event an exposure occurs during shipping.

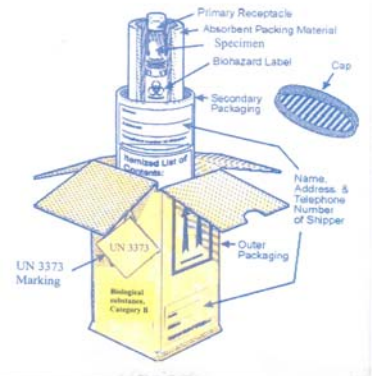

Packaging and Labeling for an Infectious substance, category B

Proper shipping name is "Biological substance, category B"

- For commercial transport, at least one surface of the outer packaging must have a minimum dimension of 4 inches x 4 inches.

- For commercial transport of "Biological Substance, Category B", the UN 3373 marking must be on the outside receptacle. The words "Biological Substance, Category B" must be marked on the outer package adjacent to the diamond-shaped UN 3373 marking.

  Note - Do not place biohazard stickers on the outside container. The biohazard marking should be on the secondary receptacle and may be on the primary receptacle.

- A *Shippers' Declaration for Dangerous Goods* **is not** required.

- Make sure to mark to correct lab on the shipping label.

For Infectious substances, category B, the completed package must be capable of successfully passing a drop test of 1.2 meters. If transport is by air, the completed package must pass a pressure test.

Additional Requirements for Infectious Substance, Category A Packaging

- Packaging must be UN certified (this means the packaging unit has passed drop, impact and pressure tests)

- The UN Certification number must be marked on the outside container. Handwritten marks are not allowed.

- **UN Certified Packaging must be used as a complete shipping package as received from the manufacturer. Substitution of parts of the packaging with other manufacturer's shipping materials is not allowed.**

- Maximum quantity per shipper is 50 ml or 50 grams on passenger aircraft and 4 liters on cargo aircraft.

- The Class 6 Infectious Substance label must be on the outside packaging.

- The proper shipping name and UN number must be on the outside packaging. Adjacent to this information the net quantity of infectious substance in the package must be shown. **Effective January 1, 2005, for security purposes, the name of the organism is no longer required on the outside packaging.** However, the name of the organism is still required on the *Shipper's Declaration for Dangerous Goods*.

- Documentation the material was received (email, USPS return receipt, tracking number showing receipt, etc.) along with a copy of the *Shippers' Declaration for Dangerous Goods* must be kept for not less than 2 years. For select agent shipments, the documentation must be kept 3 years.

- Most packaging for cultures of infectious substances is designed to hold screw-top tubes. If possible, ship the culture on an agar slant in a screw-top tube. Tape around the screw top with autoclave tape to prevent the top from working loose during shipment. If culture plates must be shipped, ensure the packaging set-up will accommodate and protect a culture plate. Culture plates should always be taped closed and placed in a zip lock bag as the first step in packaging.

Shippers Declaration for Dangerous Goods

The *Shipper's Declaration for Dangerous Goods* is a legal document. If it is not 100% correct, it is WRONG and your package will be refused for shipment and returned.

SHIPPER'S DECLARATION FOR DANGEROUS GOODS

(Provide at least three copies to the airline.)

Shipper
SC DHEC Bureau of Laboratories
8231 Parklane Road
Columbia, SC 29223
Connie Gray or Dr. Arthur Wojcik 803-896-0800

Page 1 of 1 Pages

Shipper's Reference Number

Consignee
CDC
1234 Clifton Road
Atlanta, GA 30333

FedEx Express

Two completed and signed copies of this Declaration must be handed to the operator.

WARNING

Failure to comply in all respects with the applicable Dangerous Goods Regulations may be in breach of the applicable law, subject to legal penalties.

TRANSPORT DETAILS

This shipment is within the limitations prescribed for: (delete not applicable)
PASSENGER AND CARGO AIRCRAFT
CARGO AIRCRAFT ONLY X

Airport of Departure: Columbia, SC

Airport of Destination: Atlanta, GA

Shipment type: (delete non-applicable)
NON-RADIOACTIVE "UNRADIOACTIVE"

NATURE AND QUANTITY OF DANGEROUS GOODS

Dangerous Goods Identification				Quantity and type of packaging	Packing Inst.	Authorization
UN No. or ID No.	Proper Shipping Name	Class or Division (Subsidiary Risk)	Pack. Group			
UN 2814	Infectious substance, affecting humans (Suspected Category A Infectious Substance)	6.2		50 mls	602	
UN 1845	Dry Ice	9	III	2kg All packed in one Fibreboard Box	904	

Additional Handling Information
I declare that all of the applicable air transport requirements have been met.

Emergency Telephone Number 803-896-0800

I hereby declare that the contents of this consignment are fully and accurately described above by the proper shipping name, and are classified, packaged, marked and labelled/placarded, and are in all respects in proper condition for transport according to applicable international and National Governmental Regulations. I declare that all of the applicable air transport requirements have been met.

Name/Title of Signatory
Carlton Atkinson, Material Logistics Manager
Place and Date
Columbia, SC 1-04-2006
Signature
(See reverse)

FOR RADIOACTIVE MATERIAL SHIPMENT ACCEPTABLE FOR PASSENGER AIRCRAFT. THE SHIPMENT CONTAINS RADIOACTIVE MATERIAL INTENDED FOR USE IN OR INCIDENT TO RESEARCH, MEDICAL, DIAGNOSIS, OR TREATMENT

- A *Shippers Declaration for Dangerous Goods* is **not** required for infectious substances, category B.
- A *Shippers Declaration for Dangerous Goods* **is required** for infectious substances, category A by commercial carriers.
  Note – The state courier does not require a *Shipper's Declaration for Dangerous Goods*. This is one very good reason to use the state courier system.
- The document must be attached to the outside (usually the top) of the package in a ziplock bag.
- The organism name must be shown in parentheses following the proper shipping name on the *Shipper's Declaration for Dangerous Goods*. If the infectious substance is unknown, but suspected of meeting the criteria for inclusion in Category A, the words "Suspected Category A Infectious Substance" must be shown in parentheses instead of the organism name.
- The document must be completed in **triplicate**, each as an original, with the red stripe down each side of the paper. Two copies are given to the transporter and one copy is kept for your files.

  Note - The format of the *Shippers Declaration for Dangerous Goods* changed on January 1, 2007. In the "Nature and Quantity of Dangerous Goods" section, the UN number will be the first column. Documents with the old format should be discarded.

NOTE - Federal Express does not accept hand written Shipper's Declarations. Beginning January 10, 2011, FedEx Express will require all Shipper's Declarations originating in the U.S., excluding all 023 air waybill shipments, to be prepared using only the following methods:

a) FedEx approved vendor software application;
b) Preapproved shipper proprietary software; or
c) FedEx Express Automated Shipping Solutions that have dangerous goods error checks. Note – A list of approved DG Shipping application vendors can be reviewed at www.fedex.com/us; dangerous goods (keyword). Shipper declaration "templates" from FedEx Express will no longer be accepted.

Shipping Temperatures

Check the test section in the *Bureau of Laboratories Services Guide*, if unsure of temperature requirements for the infectious substance being shipped.

- If the specimen must be shipped cold, but not frozen, use cold packs around the **outside** of the secondary packaging in an insulated shipper. Ice will melt and leak during shipping.
  [**Note 1**: All patient specimens shipped for PCR testing should be shipped cold.]
  [**Note 2**: Never place small cold packs inside the secondary container.]

- If the specimen must be shipped frozen, additional labeling is required for dry ice.

Labeling and Marking required for Dry Ice

- Class 9 DOT label

- DRY ICE UN 1845

- The amount of dry ice in the package in kilograms must be shown. One pound equals 2.2 kg.

- Dry ice must also be listed on the "Shippers Declaration For Dangerous Goods"

Airbills

For air transport, an airbill must be completed. Contact the transporter's hot line phone number, if you have any questions about completing the airbill.

These shippers are also available for use in the State Courier system.

These shippers would need to be placed inside a box which measured at least 4 x 4 inches on one side for commercial transport. The box would be the outside packaging and all the labeling and markings for an infectious substance, category B would need to be on the outside of the box.

Shipper for mycobacteriology specimen

Enteric Shipper, contains Cary-Blair transport medium

Shipper for parasitology stool sample

Transporting Infectious Substances in a Private or DHEC vehicle

Secure the properly packed and labeled infectious substance package in the vehicle as far away as possible from the driver, preferably in the trunk if available. If the vehicle is involved in an accident, the package should not be thrown around the vehicle. If there is an accident, emergency responders need to know that infectious substances are in the package.

The shipping address for Bureau of Laboratories is:

Bureau of Laboratories
8231 Parklane Road
Columbia, SC 29223
24/7 telephone number 803-896-0800

Business hours are 8:00 AM to 4:00 PM
Monday through Friday, except for state holidays

Bioterrorism Specimens and Cultures

Prior notification is requested for specimens and/or cultures being sent for "rule out/rule in" testing for bioterrorism agents.

> Please notify:
> **Amanda Moore, 803-896-0777**, before shipping these specimens or cultures.
> Alternate: Megan Davis, 803-896-0870

Package cultures in UN certified packaging. Classification of the infectious substance is the shipper's responsibility and should be based on the available information.

Cultures may be sent through the SC State courier system as "Biological Substance, Category B" **as long as UN certified shippers are used**.

If the infectious substance will be shipped as a Category A infectious substance, a *Shipper's Declaration for Dangerous Goods* is not required by the SC State courier, but **would be required by a commercial transporter**.

Please verify that the Special Pathogens Laboratory has been marked on the "To" shipping label (see below).

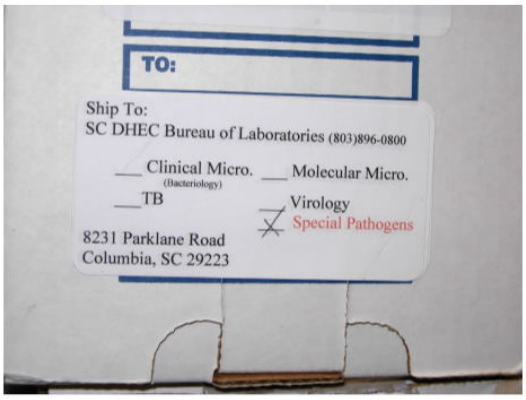

Important Points to Remember

- The shipper is responsible for the infectious substance package until it is in the hands of the recipient. **Proper packaging, marking and labeling is the shipper's responsibility.**

- Commercial carriers (Federal Express, Airborne Express, etc.) may have additional requirements which are unique to their company. **If you have any questions on packaging, marking, labeling, or documentation, always check with the commercial carrier you plan to use.**

- Make sure that the correct marking and labeling information is on the outside packaging.

- Do not put laboratory forms inside the secondary container with the specimen.

- The outside packaging should have the name and telephone number of a person who is knowledgeable about the contents of the shipment. This is important emergency information in the event an exposure occurs during shipping. For Category A, DOT requires the emergency contact to be a person knowledgeable and available to answer the call directly. An answering service or voicemail is not acceptable. An outside contractor that provides this type of service may be used if you have an agreement in place.

- Do NOT put biohazard labels on the outside packaging. The biohazard label should be on the secondary receptacle.

- Do NOT use excessive tape to close the outside container. One piece of clear packaging tape across the seam should be adequate.

- Do NOT cover or deface any label or marking. A commercial transporter will not accept the package.

- Seal the package with clear shipping tape. Cut the tape to open the package. Pulling the tape off often defaces the markings and labels on the outside packaging.

- If an overpack with dry ice is used, a good rule of thumb is to add at least 6 pounds per 24-hour period. The US Postal Service limits the amount of dry ice per package to 5 pounds; therefore if more than 5 pounds of dry ice is needed, another transporter must be used.

- Employees shipping infectious substances must be trained on proper packaging and labeling. Training must be documented. Retraining is required when the regulations change, every three years (DOT), or every two years (IATA). Some transporters will require a written certification of the training.

- The United States Postal Service will accept infectious substances, category B, shipped as first class, priority or express mail.

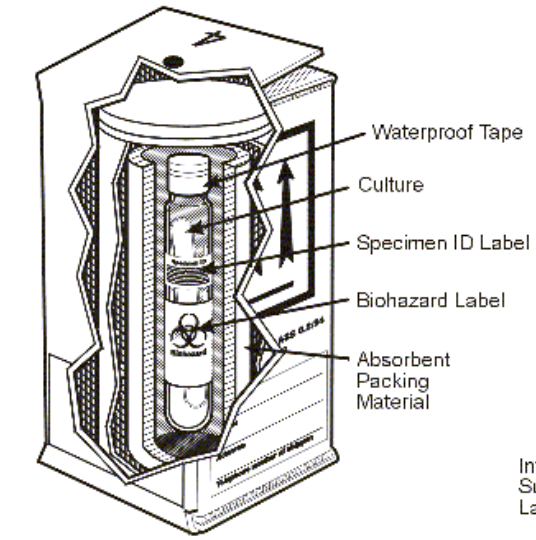

Cross Section of Proper Packing

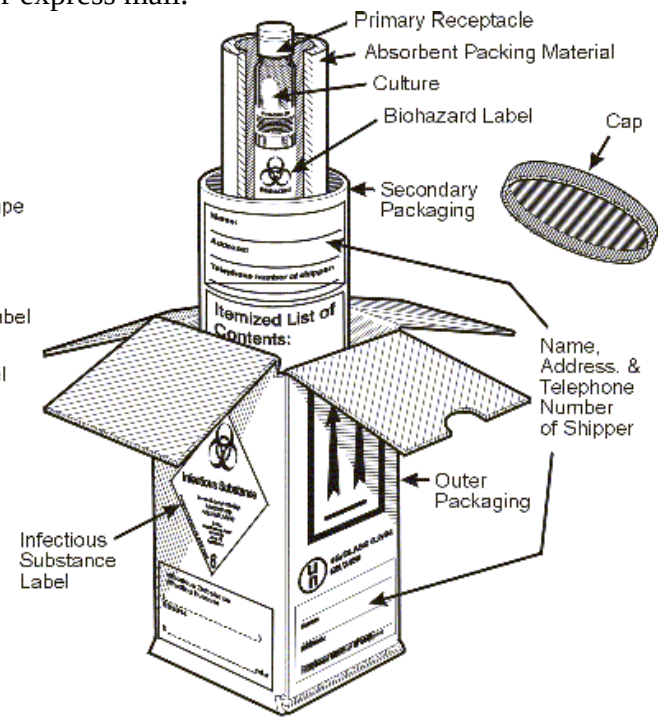

Packing and Labeling of Infectious Substances
Category A

References for Information in This Document:

IATA *Dangerous Goods Regulations*, 57th edition, effective January 1, 2016 to December 31, 2016

Code of Federal Regulations, 49 CFR Parts 171-180, (US Department of Transportation's Hazardous Materials Regulations)

United States Postal Service, *Domestic Mail Manual*

Code of Federal Regulations, 42 CFR Part 73, (Select Agent Regulations)

Centers for Disease Control and Prevention, *Guidelines for the Shipment of Dried Blood Spot Specimens.*

SHIPPER'S DECLARATION FOR DANGEROUS GOODS (Provide at least three copies to airline.)

Shipper
MARVIN TYLER
SCDHEC-LAB
8231 PARKLANE RD

COLUMBIA SC 29223 US

Air Waybill No. 518426232902

Page 1 of 1 Page(s)

Shipper's Reference Number *(optional)*

Consignee BRIAN GOOTEE 8038960800

STAT/VIRAL SPECIAL PATH. BRANCH
CDC
1600 CLIFTON ROAD NE

ATLANTA GA 30333 US

FedEx Express

Two completed and signed copies of this Declaration must be handed to the operator

WARNING

Failure to comply with all respects with the applicable Dangerous Goods Regulations may be in breach of the applicable law ,subject to legal penalties.

TRANSPORT DETAILS

This shipment is within the limitations prescribed for: (delete non applicable)

PASSENGER AND CARGO AIRCRAFT

Airport of Departure
COLUMBIA

Airport of Destination: ATLANTA 37SSIA

Shipment type: *(delete non applicable)*
NON-RADIOACTIVE

NATURE AND QUANTITY OF DANGEROUS GOODS

UN Number or identification Number, proper shipping name, Class or Division (subsidiary risk), packing group (if required), and all other required information.

UN 2814, Infectious substance, affecting humans(SUSPECTED CATEGORY A INFECTIOUS SUBSTANCE),6.2,//1
FIBREBOARD BOX X 10.00 ml//620
Overpack Used, #518426232902, Total net quantity 0.01 L

Additional Handling Information

I declare that all of the applicable air transport requirements have been met.

I hereby declare that the contents of this consignment are fully and accurately described above by the proper shipping name, and are classified, packaged, marked and labelled/placarded, and are in all respects in proper condition for transport according to applicable International and National Governmental Regulations. I declare that all of the applicable air transport requirements have been met.

8037678118 *Emergency Telephone Number*

Name/Title of Signatory
AMANDA MOORE/SUPERVISOR

Place and Date
SCDHEC 12/20/2012

Signature AMANDA MOORE
(see warning above)

FOR RADIOACTIVE MATERIAL SHIPMENT ACCEPTABLE FOR PASSENGER AIRCRAFT, THE SHIPMENT CONTAINS RADIOACTIVE MATERIAL INTENDED FOR USE IN OR INCIDENT TO RESEARCH, MEDICAL DIAGNOSIS OR TREATMENT. ADR EUROPEAN TRANSPORT STATEMENT: CARRIAGE IN ACCORDANCE WITH 1.1.4.2.1

LOGOS #157295 6/01 WCS

TEST FEE POLICY

The Bureau of Laboratories is only partially supported by legislative appropriations from State Funds. Therefore, we have been authorized to charge fees under certain conditions.

1. TEST FEES:

A fee is charged for those tests which benefit only the individual patient or which are readily available from private sources.

Exempt from charges:

A. Test (s) that is not reasonably available from qualified private laboratories.
B. Test (s) whose result is primarily of epidemiologic or public health significance.
C. Test (s) run as a matter of bureau policy which is not requested by the physician.
D. When the patient is medically indigent. In this case, the physician will be billed, but may deduct the charges before remitting. See billing procedures.
E. Repeat tests for Newborn Screening. If the repeat test was requested by the Bureau of Laboratories, i.e., initial test was invalid due to early dismissal, or improperly collected specimen or insufficient quantity or other reason, there is no charge for the repeat test. ***All initial and second tests are subject to the full fee.***

2. RETRIEVAL OF RECORDS:

When minimal time (less than 15 minutes) is required to retrieve and copy requests for laboratory documents or records, no charge will be levied. Requests for laboratory documents or records requiring more than 15 minutes retrieval and copy time will be assessed a charge of $20.00/ hour.

BILLING PROCEDURE

Clients/Customers will be billed monthly by an itemized invoice that includes the patient's name, medical record number, specimen number, date mailed, test(s) performed, and the test fees for each specimen. Billing invoices are generated by Sender and/or Billing numbers. Please note that the Bureau of Laboratories **does not** bill Medicaid or any private insurance companies.

Payments:

1. Do not send payment with the specimen. Pay only when you receive a billing invoice. Note: Please do not send cash payments.

2. The billing invoice will consist of two copies: The remittance copy must be returned with your payment for proper crediting of your account. Please retain the provider copy for your records. On the left side of the billing invoice there is a column headed "Eligible for NON payment." Please place an "X" in this column beside the name of any patient listed who is considered to be unable to pay for the test, i.e. indigent. Place the total charges for patients eligible for non-payment in the indicated space at the upper right-hand corner of the billing invoice and deduct this amount from the total charges. Please indicate the amount remitted on the line designated on the billing invoice. Please make check payable to South Carolina Department of Health and Environmental Control (SCDHEC) and remit to the Attention of: Bureau of Financial Management, PO Box 100103, Columbia, South Carolina 29202-3103. If you have any questions pertaining to your account, please notify the Bureau of Laboratories immediately at (803) 896-0800.

3. Payment can be accessed on DHEC website at http://www.scdhec.gov. Click on "For Business" then click on "Pay Invoices". **Note: Total payment amount online for debit/credit card payment is limited $3,000.00 with a $1.00 transaction fee. Total payment amount greater than $3,000.00 can be paid online by electronic check.**

4. Delinquent accounts are subject to have test results withheld until the account is paid in full.

BUREAU OF LABORATORIES SERVICES GUIDE
INDEX

Acanthamoeba Conventional PCR & Real –Time PCR……...II-1
Accreditation I-2
Acid Fast Bacilli culture (AFB), See Mycobacterial culture.....II-35
Acylcarnitines Profile, See Newborn Screening Panel……II-38
Address of Bureau of Laboratories..... I-1
Adenovirus culture (See Respiratory Virus Culture) II-43
Aerobe referred for identification (See Bacterial Isolate, Referred for Identification) II-2
AIDS Testing, See HIV-1/HIV-2 Serology.....II-27
Amino Acid Profile, See Newborn Screening Panel II-38
Arbovirus serology IgM. II-1
Bacillus anthracis……..II-2
Bacterial isolate referred for ID.....II-2
Billing procedure V-2
Billing numbers III-5
Biotinidase, See Newborn Screening II-38
Blood Lead, See Lead Analysis, blood II-28
Collection procedure..... III-6
Blood smears for blood parasites, See Malaria smear II-32
Bordetella pertussis culture.....II-3
Collection procedure III-38
Bordetella pertussis sp. DNA Detection by PCR Real-time PCR.....II-3
Collection procedure III-38
Bordetella pertussis isolate, referred for identification II-4
Botulism II-4
Brucella……II-5
Burkholderia mallei……...II-5
Burkholderia pseudomallei……II-6
Campylobacter II-6
CBC II-7
CD4, See Lymphocyte Subset II-31
CDC, Specimens Referred to I-3
Certification of laboratory I-2
Chagas disease, See Parasite Serology II-40
Chikungunya IgM Capture ELISA II-7
Chlamydia antigen detection by Nucleic acid Probe II-8
Collection procedure for Gen-Probe Aptima Combo 2 procedure (swab and/or Urine) III-40
Clinic Chemistry for DHEC clinics II-8
Complete Blood Count, See CBC II-7
Congenital Adrenal Hyperplasia, See Newborn Screening Panel II-38
Corynebacterium Diphtheria Culture and ID.....II-9
County codes III-4
Coxsackie A & B virus culture, See Enterovirus culture II-13
Cryptosporidium antigen II-10
Collection procedures, Blood III-6
Collection procedures, Culture..... III-29
Collection procedures, Other..... III-40

Cyclospora II-10
Cysticercosis, See Parasite serology II-40
Cystic Fibrosis, See Newborn Screening Panel II-38
Dengue IgM II-11
DHEC Program numbers III-5
Diphtheria, See *Corynebacterium diphtheria* II-9
Collection procedure (throat culture) III-32
Disease reporting I-7
E.coli 0157 culture, See Enteric pathogens culture II-12
Eastern Equine Encephalitis, See Arbovirus Serology IgM and IgG II-1
ECHO virus, See Enterovirus culture II-13
Echinococcus, See parasite serology II-40
Enteric GI Panel by FilmArray (PCR) II-12
Enteric pathogens culture II-12
Collection procedure III-29
Enteric pathogens submitted by Non-culture independent methods (PCR) II-13
Enterovirus culture II-13
Collection procedure for stool culture III-36
Collection procedure for throat culture III-37
Ehrlichiosis II-14
Eschericia coli – shiga toxin-producing II-14
Filariasis, See parasite serology II-40
Food-borne illness (Food poisoning) II-15
Francisella tularensis II-15
Galactosemia, See Newborn Screening Panel II-38
Gen-Probe Aptima Combo 2 for detection for *Chlamydia/GC*.
Chlamydia detection II-8
Gonococcal detection II-17
Collection procedure III-40
German measles, See Rubella serology IgG and IgM II-44
Giardia antigen II-16
GI Outbreak II-16
Gonorrhea Culture II-16
Collection procedure III-30
Gonorrhea (GC) Detection (Gen-Probe) II-17
Haemophilus Influenzae II-18
Hantavirus Serology- IgG/IgM II-18
Hematology, See CBC II-7
Hemoglobin (Hb) Electrophoresis II-19
Hemolytic Anemia, See Hemoglobin Electrophoresis II-19
Hepatitis A Serology II-19
Hepatitis B Serology II-20
Hepatitis C Serology, Total Antibody II-24
Hepatitis C Quantitation (RNA) II-24
Collection procedure III-26
Herpes simplex culture II-25
Collection procedure III-37
Hg,Pb, Cd screen in blood II-25
HIV-1 PCR Quantitative (RNA) II-26
HIV-1/HIV-2 Serology II-27

Hours of business I-1
Hypothyroidism, See Newborn screening II-38
Influenza A : H5N1 (asian clave) II-27
Influenza Detection by Real-Time RT-PCR II-28
Instructions for completing test request form 1332 ..... III-3
Laboratory address and business hours I-1
Laboratory Organization and contact persons I-2
Lead analysis, Blood II-28
Legionella culture II-29
Legionella FA II-29
Legionella Urinary Antigen Test II-30
Leishmaniasis, See parasite serology II-40
Leptospirosis Culture II-30
Listeria species II-31
Lymphocyte subset II-31
Mailing address for Bureau of Laboratories I-1
Malaria, See parasite serology II-40
Malarial smear II-32
MCADD See Newborn Screening Panel II-38
Measles (Rubeola) RNA Detecttion by Real-Time RT-PCR II-33
Measles (Rubella) serology, See Rubella serology IgG and IgM II-44
Measles (Rubeola) serology, See Rubeola Virus Immune Status/Diagnostic II-44
MHA-TP, SeeTP-PA II-47
Mites, See scabies II-44
Mumps RNA Detection by Real-Time RT-PCR II-34
Mumps virus culture II-34
Collection procedure III-37
Mumps virus serology IgG and IgM II-35
Mycobacteria
Culture & ID II-35
Collection procedures III-33
Referred specimen for ID II-36
Susceptibility testing II-36
Naegleria fowleri II-37
Neisseria gonorrhoeae, See Gonorrhea culture II-17
Collection procedure III-30
Neisseria meningitidis II-37
Newborn Screening Panel II-38
Collection procedure, Heel-stick III-22
Norovirus detection by Real Time RT-PCR II-39
Ordering Test Request forms III-2
Ordering supplies and collection kits III-1
Pap Test, Liquid-based Monolayer II-40
Parasite serology II-40
Phenylketonuria (PKU), See Newborn Screening Panel II-38
PKU, See Newborn Screening Panel II-38
Poliomyelitis, See enterovirus culture II-13
QuantiFeron-TB Gold (QFT) II-41
Collection procedure III-27
Rabies examination II-42

Remailing results I-7
Repeat testing, billing policy V-2
Respiratory Panel by FilmArray (PCR) II-42
Respiratory virus culture II-43
Collection procedure III-36
Results reports I-6
Rotavirus, See GI Outbreak II-16
RPR, See Syphilis Serology II-47
Rubella Serology IgG/IgM II-44
Rubeola Serology-Immune Status/ Diagnostic II-44
Salmonella, See Enteric pathogens culture II-12
Scabies II-44
Collection procedure, skin scrapings III-44
Schistosomiasis serology, See parasite serology II-40
Sender number, obtaining III-4
Shiga-toxin Test, See *Escherichia coli*-shiga-toxin producing II-14
Shigella, See Enteric pathogens culture II-12
Shipping specimens to lab
Definitions IV-4
Shipping Diagnostic specimens via U.S. Mail and State courier
Clinical specimens IV-6
Blood spots for newborn screening IV-2
Shipping Diagnostic specimens and Infectious substances via a commercial carrier IV-6
Shipping forms IV-11
Shipping containers, obtaining III-1
Sickle Cell, See Hemoglobin Electrophoresis and Newborn Screening II-19, II-38
Skin scrapings for Scabies II-44
Specimen rejection criteria I-5
Sporotrichosis serology II-45
St. Louis Equine Encephalitis, See Arbovirus serology II-1
Staphylococcus II-45
Staphylococcus (VISA/VRSA) isolates II-46
Stool culture for enteric pathogens, See Enteric pathogens culture II-12
Collection procedure II-27
Streptococcus (Belta Hemolytic Group A) II-46
Supplies, obtaining III-1
Susceptibility Testing for mycobacteria, See Mycobacteria, susceptibility II-36
Syphilis serology Screen (RPR) II-47
T4 lymphocytes, See Lymphocyte subset II-31
TB culture, See Mycobacteria, culture & ID II-35
Testing policies I-3
Test request forms, instructions for completing III-3
Test request forms, ordering III-2
Toxocara, See parasite serology II-40
Toxoplasma Serology, See parasite serology II-40
TP-PA II-47
Trace Heavy Metals, Urine II-48
Treponemal antibody serology, See TP-PA II-47
Trichinosis, See parasite serology II-40
Tuberculosis culture, See Mycobacteria, culture & ID II-35

Tularemia II-48
Varicella virus culture II-49
Varicella serology II-49
Variola……..II-50
Venipuncture procedure III-6
Vibrio, See Enteric pathogens culture II-12
Viral culture, routine, See specific groups or viruses
Viral Load, Hepatitis C- see Hepatitis PCR Quantitation (RNA) II-24
Viral Load- HIV, See HIV-1 PCR Quantitative (RNA).....II-26
Visceral Larva Migrans, See parasite serology II-40
West Nile Virus Serology.....II-51
Western Equine Encephalitis, See arbovirus serology II-1
Whooping Cough, See *Bordetella pertussis* …….....II-3
Yersinia Entercolitica II-51
Yersinia pestis.....II-52
Zika IgM.....II-52