403139

Environmental
Resources
Management

498 Wando Park Blvd.
Suite 100
Mt. Pleasant, SC 29464
(843) 856-4270
(843) 856-4283 (fax)

SCANNED

RECEIVED
JUL 3 2006
Water Monitoring Assessment & Protection Division

ERM

June 29, 2006

Mr. Chris Forrest, P.G.
Hydrologist
South Carolina Department of Health
and Environmental Control
Bureau of Water Pollution Control
2600 Bull Street
Columbia, South Carolina 29201

Subject: Well Construction Report
The Wix Filtration Corporation - Dillon, South Carolina
The Affinia Group, Inc.
ERM Project No. 41284

03139

Dear Mr. Forrest:

On behalf of our client, The Affinia Group, Inc., Environmental Resources Management (ERM) is pleased to present this ground water monitoring well construction and sampling data submittal for the Wix Filters Corporation of Dillon, South Carolina in compliance with the South Carolina Department of Health and Environmental Control (SCDHEC) *Monitoring Well Approval* letter, issued on March 27, 2006. Four ground water monitoring wells were installed on May 17, 2006. A March 27, 2006 *Quality Assurance Project Plan*, approved by the SCDHEC, was used to guide work procedures outlined in the March 2006 *Additional Environmental Services Work Plan*, approved by the SCDHEC, through quality assurance and quality control efforts.

Ground water monitoring wells MW-1, MW-2, MW-3, and MW-4 were drilled and installed in soil to approximately 17 feet below ground surface (BGS) using a truck-mounted drill rig with 6¼-inch hollow stem augers. Subsurface soils at each monitoring well location were sampled using a drill rig mounted hydraulic-hammered split barrel sampler. Soil samples collected from each split barrel sampler were visually classified, then composited and placed in freezer bags for subsequent headspace analysis with a photoionization detector (PID) to evaluate the samples for the presence of volatile organic compounds (VOCs). The soil sample exhibiting the highest PID reading from each boring was collected in accordance with EPA Method 5035 for laboratory analysis. Soil cuttings

A7

generated during the installation of the four monitoring wells were contained in closed-top 55-gallon drums and staged in a secure area.

Monitoring wells MW-1, MW-2, MW-3, and MW-4 were constructed with Schedule 40 PVC two-inch diameter casing and 0.010-inch slotted well screen. Each well was constructed with a sand filter pack, bentonite seal, and cement-bentonite grout mixture as shown on the attached ERM Test Boring Records (Attachment A). The wells were completed with lockable pressure caps, watertight six-inch flush-mounted covers, and two-foot square concrete pads. Table 1 presents a summary of ground water monitoring well construction data for each well, including elevation data and latitude and longitude coordinates in accordance with Condition #2. Figure 1 shows the location of the four ground water monitoring wells.

Each of the four ground water monitoring wells was developed, purged, and sampled. Well development was performed on May 17 and 18, 2006 with a downhole submersible Whale™ pump. Development fluids were contained in labeled, closed-top 55-gallon drums located in a secure staging area. Attachment B presents the well development records. The wells were purged the following week on May 24 and 25, 2006 by low flow methods using a peristaltic pump. Purge water was contained in labeled closed-top 55-gallon drums located in a secure staging area. Drummed soil cuttings and water will be characterized for disposal. Ground water sampling logs and field sampling reports are found in Attachment C. Prior to purging each monitoring well, ground water elevation data were obtained and plotted as shown on the Figure 2 potentiometric surface map. Sample results, including quality control results, are found on Tables 2 and 3. Laboratory reports are found in Attachment D.

In accordance with Condition #1 of the Monitoring Well Approval letter, Mr. Kevin R. Warren of A.E. Drilling Services, Inc. is a State of South Carolina certified well driller (Certificate No. 750-A). Mr. Warren drilled and installed each of the four monitoring wells.

The four monitoring wells were surveyed by Advent Environmental, Inc., a Mt. Pleasant, South Carolina licensed surveyor, for horizontal location to within 1.0-foot accuracy, top of casing elevation was surveyed to within 0.010-foot accuracy, and the ground surface was surveyed to within 0.1-foot accuracy.

Drilling equipment and downhole tools were steam-cleaned prior to advancing each soil test boring including the four monitoring wells. Decontamination fluids were contained in closed-top 55-gallon drums and staged in a secure area.

Shortly, Wix will be forwarding to you a memorandum discussing these results and setting forth for your consideration recommendations for additional work at the site.

Wix looks forward to continuing to work with you and SCDHEC on this project.

Sincerely,

Todd W. Moody, P.G.

Attachments
cc: Mr. Keith Clark – Affinia

Attachment A
ERM Test Boring Records

Client: The Affinia Group, Inc.	Northing: 954774.272	***ERM Test Boring Record***
Site Location: Wix Filtration Corp.	Easting: 2486313.780	Soil Test Boring: STB-1
City, State: Dillon, SC	NGVD Surface Elevation: 129.69 feet	Drilled By: A. E. Drilling Services, Inc.
Project Number: 41284		Logged By: M. Easterbrook

SUBSURFACE PROFILE					
Depth, Feet BGS	Symbol	Description	PID (ppm)	Standard Blow Counts per Foot ("N")	Remarks
					Background PID reading was 0.4 ppm
		Ground Surface @ 129.69 ft., NGVD			
0		Topsoil, root hairs to 0.3 ft.			
1		Very stiff, brown (7.5YR 5/4), SILT (ML), little fine sand, trace clay, trace roots, slightly moist.	0.5	19	
2		Medium stiff, dark brown (7.5YR 3/2), clayey SILT, (CL), trace fine sand; becoming gray (7.5YR 5/1), silty CLAY (CL) at 5.0 ft., slight odor, moist.	0.6	6	
3					
4		Becoming dark yellowish brown (10YR 4/6) mottled with reddish yellow (7.5YR 7/8), silty CLAY (CL), slight odor, moist.	53.7	6	
5					
6		Same as above.	48.7	6	
7					
8		Becoming stiff, gray (10YR 6/1), clayey SILT (CL), moist.	14.7	9	
9					
10		Stiff, gray (10YR 6/1), sandy CLAY (SC), trace silt, slight odor, moist.	3.8	8	
11					
12		Soft, brownish yellow (10YR 6/8), sandy SILT (ML), little clay, very moist.	1.6	2	
13					
14		Very loose, light gray (10YR 7/1), silty SAND (SM), wet. Becoming loose, strong brown (7.5YR 5/8) mottled with light gray (7.5YR 7/1), silty SAND (SM), slight odor, wet.	1.1	6	
15					
16		Boring terminated at 15.00 feet BGS			Bottom of boring at 114.69 ft., NGVD
17		BGS = Below Ground Surface PID = Photoionization Detector ppm = parts per million NGVD = National Geodetic Vertical Datum of 1929			
18					
19					
20					
21					
22					
23					
24					

Driller: Kevin Warren	*Environmental Resources Management*	Borehole Diameter: 6 inches
Drill Completion Date: 5/16/06	*498 Wando Park Blvd.*	Total Depth: 15.00 feet BGS
Drilling Method: Hollow Stem Auger	ERM *Suite 100* *Mt. Pleasant, SC 29464*	Sheet: 1 of 1

Client: The Affinia Group, Inc.	Northing: 954811.203	***ERM Test Boring Record***
Site Location: Wix Filtration Corp.	Easting: 2486299.879	Soil Test Boring: STB-2
City, State: Dillon, SC	NGVD Surface Elevation: 129.40 feet	Drilled By: A. E. Drilling Services, Inc.
Project Number: 41284		Logged By: M. Easterbrook

SUBSURFACE PROFILE					
Depth, Feet BGS	Symbol	Description	PID (ppm)	Standard Blow Counts per Foot ("N")	Remarks
					Background PID reading was 0.4 ppm
		Ground Surface @ 129.40 ft., NGVD			
0		Topsoil, root hairs to 0.3 ft.			
1		Stiff, yellowish red (5YR 4/6), clayey SILT (CL), trace roots, slightly moist.	0.5	11	
2		Becoming very stiff, dark reddish gray (2.5YR 3/1).	1.2	21	
3					
4		Becoming medium stiff, gray (5YR 5/1), SILT (CL), little clay, slight odor, moist.	20.0	6	
5					
6		Same as above.	154.0	10	
7					
8		Becoming silty CLAY (CL), slight odor, moist.			
9		Becoming stiff, light olive gray (5Y 6/2), silty CLAY (CL), trace tree roots, slight odor, moist.	6.9	10	
10					
11		Becoming medium stiff, gray (7.5YR 5/1), silty CLAY (CL), trace tan sand seam at 10.9 ft., trace tree roots, moist.	0.6	7	
12					
13		Loose, gray (7.5YR 6/1), clayey SAND (SC), wet.	1.5	4	
14		Becoming strong brown (7.5YR 5/8) at 13.75 ft.	0.6	2	
15					
16		Boring terminated at 15.00 feet BGS			Bottom of boring at 114.40 ft., NGVD
17		BGS = Below Ground Surface PID = Photoionization Detector ppm = parts per million NGVD = National Geodetic Vertical Datum of 1929			
18					
19					
20					
21					
22					
23					
24					

Driller: Kevin Warren	*Environmental Resources Management* *498 Wando Park Blvd.* *Suite 100* *Mt. Pleasant, SC 29464*	Borehole Diameter: 6 inches
Drill Completion Date: 5/16/06		Total Depth: 15.00 feet BGS
Drilling Method: Hollow Stem Auger		Sheet: 1 of 1

Client: The Affinia Group, Inc.	Northing: 954860.235	***ERM Test Boring Record***
Site Location: Wix Filtration Corp.	Easting: 2486283.385	Soil Test Boring: STB-3
City, State: Dillon, SC	NGVD Surface Elevation: 129.78 feet	Drilled By: A. E. Drilling Services, Inc.
Project Number: 41284		Logged By: M. Easterbrook

SUBSURFACE PROFILE					
Depth, Feet BGS	Symbol	Description	PID (ppm)	Standard Blow Counts per Foot ("N")	Remarks
					Background PID reading was 0.4 ppm
		Ground Surface @ 129.78 ft., NGVD			
0		Topsoil, root hairs to 0.3 ft.			
1		Stiff, yellowish red (5YR 4/6), clayey SILT (CL), trace roots, slightly moist.	0.4	10	
2			0.5	10	
3		Stiff, very dark brown (2.5YR 2.5/3), SILT (ML), trace fine sand, trace roots .			
4			20.1	11	
5		Stiff, dark gray (7.5YR 4/1), sandy CLAY (SC), trace roots, slight odor, moist.			
6					
7		Same as above; becoming very soft.	20.1	1/weight of rods	
8		Stiff, dark grayish brown (10YR 5/2), silty CLAY (CL), trace sand, slight odor, moist.	72.6	9	
9					
10		Stiff, light gray (10YR 7/1), sandy CLAY (SC), slight odor, moist.	25.9	12	
11					
12					
13		Becoming loose, gray (7.5YR 6/1), clayey SAND (SC), trace tree roots, wet.	0.7	5	
14		Becoming very loose, very dark gray (10YR 3/1), CLAY and SAND (SC), wet.	0.9	2	
15					
16		Boring terminated at 15.00 feet BGS			Bottom of boring at 114.78 ft., NGVD
17		BGS = Below Ground Surface PID = Photoionization Detector			
18		ppm = parts per million NGVD = National Geodetic Vertical Datum of 1929			
19					
20					
21					
22					
23					
24					

Driller: Kevin Warren	*Environmental Resources Management*	Borehole Diameter: 6 inches
Drill Completion Date: 5/16/06	*498 Wando Park Blvd.*	Total Depth: 15.00 feet BGS
Drilling Method: Hollow Stem Auger	ERM *Suite 100* *Mt. Pleasant, SC 29464*	Sheet: 1 of 1

Client: The Affinia Group, Inc.	Northing: 954957.950	*ERM Test Boring Record*
Site Location: Wix Filtration Corp.	Easting: 2486281.094	Soil Test Boring: STB-4
City, State: Dillon, SC	NGVD Surface Elevation: 131.36 feet	Drilled By: A. E. Drilling Services, Inc.
Project Number: 41284		Logged By: M. Easterbrook

SUBSURFACE PROFILE					
Depth, Feet BGS	Symbol	Description	PID (ppm)	Standard Blow Counts per Foot ("N")	Remarks
					Background PID reading was 0.4 ppm
		Ground Surface @ 131.36 ft., NGVD			
0		Topsoil, root hairs to 0.3 ft.			
1		Stiff, dark reddish brown (5YR 2.5/2), SILT (CL), little clay, trace sand, trace roots, slightly moist.	0.4	13	
2		Same as above; becoming medium stiff.	0.4	6	
3					
4			1.4	7	
5		Becoming gray (5YR 5/1), clayey SILT (CL).			
6		Soft, brown (7.5YR 4/4), SILT (SM), little fine sand, trace roots, moist.	0.4	4	
7					
8		Stiff, yellowish gray (10YR 5/4) mottled with gray (10YR 6/1), silty CLAY (CL), trace sand, moist.	0.5	11	
9					
10		Same as above; becoming CLAY (CL), little silt, moist.	0.4	12	
11					
12		Loose, light gray (10YR 7/1), silty SAND (SM), moist.	0.4	8	
13					
14		Loose, gray (2.5YR 6/1), clayey SAND (SC), moist.	0.5	6	
15		Becoming gray (2.5YR 6/1), CLAY and SAND (SC) at 14.9 ft, moist.			
16		Boring terminated at 15.00 feet BGS			Bottom of boring at 116.36 ft., NGVD
17		BGS = Below Ground Surface PID = Photoionization Detector ppm = parts per million NGVD = National Geodetic Vertical Datum of 1929			
18					
19					
20					
21					
22					
23					
24					

Driller: Kevin Warren	*Environmental Resources Management* *498 Wando Park Blvd.* *Suite 100* *Mt. Pleasant, SC 29464*	Borehole Diameter: 6 inches
Drill Completion Date: 5/17/06		Total Depth: 15.00 feet BGS
Drilling Method: Hollow Stem Auger		Sheet: 1 of 1

Client: The Affinia Group, Inc.	Northing: 954878.914	***ERM Test Boring Record***
Site Location: Wix Filtration Corp.	Easting: 2486306.004	Soil Test Boring: STB-5
City, State: Dillon, SC	NGVD Surface Elevation: 131.82 feet	Drilled By: A. E. Drilling Services, Inc.
Project Number: 41284		Logged By: M. Easterbrook

SUBSURFACE PROFILE						
Depth, Feet BGS	Symbol	Description	PID (ppm)	Standard Blow Counts per Foot ("N")	Well Installation Diagram	Remarks
		Ground Surface @ 131.82 ft., NGVD			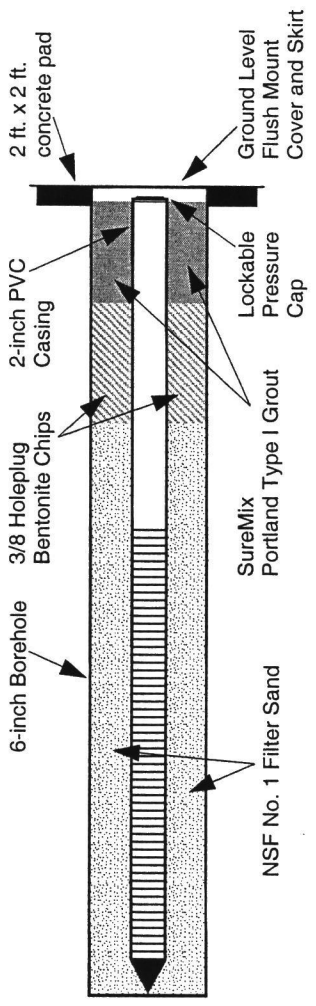	Top of casing is 0.26 feet below ground surface (131.56 ft, NGVD)
0		Topsoil, root hairs to 0.3 ft.				Background PID reading was 0.4 ppm
1		Medium stiff, strong brown and red clayey SILT (CL), few root hairs, trace fine sand.	0.5	7		**Soil Test Boring STB-5 became monitoring well MW-1**
2		Becoming soft, yellowish brown (10YR 5/4) to black (10YR 2/1) silty CLAY (CL), moist.	47.2	4		
3		Strong odor at 3.5 ft.				
4		Becoming medium stiff, gray (2.5Y 5/1), moist.	89.0	5		
5		Trace fine sand, odor, moist.				
6		Becoming gray (2.5Y 5/1) mottled with olive brown (2.5Y 4/4) CLAY (CH), trace silt, trace fine sand at 6.5 ft., high plasticity, odor, moist.	1.2	4		
7						
8		Same as above	1.1	4		
9						
10		Same as above	2.6	11		Top of 0.010-inch slotted PVC screen at 124.65 ft., NGVD
11						
12		Same as above; becoming olive brown (2.5Y 4/4), sandy CLAY (SC); becoming stiff, light olive brown (2.5Y 5/6) and light gray (2.5Y 7/2), sandy CLAY (SC), some silt. At 13.2 ft., pale yellow (2.5Y 8/2) clayey silt lens, trace sand. Becoming medium stiff, light gray (2.5Y 7/1), sandy CLAY (SC), moist.	1.1	12		
13						
14			0.7	5		
15						
16						
17						
18		Boring terminated at 17.27 ft. BGS				
19		BGS = Below Ground Surface PID = Photoionization Detector				
20		ppm = parts per million NGVD = National Geodetic Vertical Datum of 1929				Bottom of boring at 114.55 ft., NGVD
21						
22						
23						
24						

Driller: Kevin Warren	*Environmental Resources Management* *498 Wando Park Blvd.* *Suite 100* *Mt. Pleasant, SC 29464*	Borehole Diameter: 6¼ inches
Drill and Installation Date: 5/17/06		Total Depth: 17.27 feet BGS
Drilling Method: Hollow Stem Auger		Sheet: 1 of 1

Client: The Affinia Group, Inc.	Northing: 954869.393	***ERM Test Boring Record***
Site Location: Wix Filtration Corp.	Easting: 2486275.086	Soil Test Boring: STB-6
City, State: Dillon, SC	NGVD Surface Elevation: 129.86 feet	Drilled By: A. E. Drilling Services, Inc.
Project Number: 41284		Logged By: M. Easterbrook

SUBSURFACE PROFILE						
Depth, Feet BGS	Symbol	Description	PID (ppm)	Standard Blow Counts per Foot ("N")	Well Installation Diagram	Remarks
		Ground Surface @ 129.86 ft., NGVD			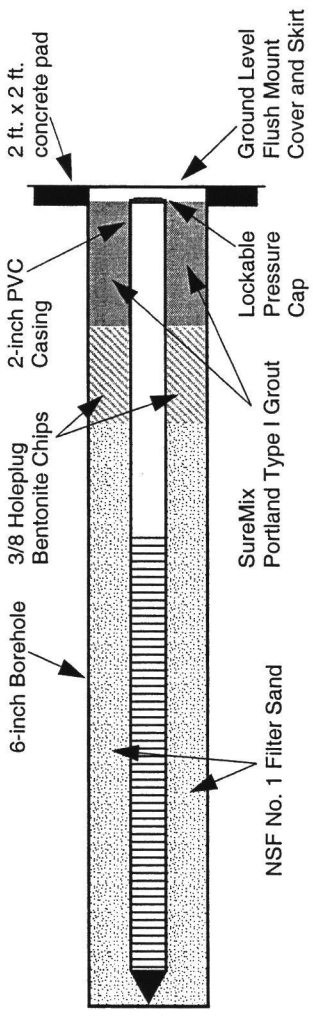	Top of casing is 0.28 feet below ground surface (129.58 ft, NGVD) Background PID reading was 0.4 ppm
0		Topsoil, root hairs to 0.3 ft.				
1		Stiff, brown (10YR 5/4), clayey SILT (CL), trace roots.	0.5	10		**Soil Test Boring STB-6 became monitoring well MW-2**
2		Becoming stiff, black (10YR 2/1), clayey SILT (CL), odor at 3.3 ft., moist.	0.6	9		
3						
4		Becoming medium stiff, grayish brown (10YR 5/2), CLAY (CL), plastic, little silt, trace fine sand at 4.7 ft., moist.	10.0	6		
5						
6		Same as above; becoming modeled with light olive brown (2.5Y 5/3), trace fine sand at 6.5 ft., plastic, moist.	66.1	7		
7						
8		Same as above; few fine sand.	6.8	10		
9						
10		At 10.4 ft., firm, grayish brown (2.5Y 5/2), clayey SILT (CL), few fine sand, trace tree roots at 11.0 ft.	6.6	8		Top of 0.010-inch slotted PVC screen at 122.48 ft, NGVD
11						
12		Soft, gray (2.5Y 5/1), CLAY (SC), some fine sand, trace tree root hairs at 13.0 ft., wet.	0.9	4		
13						
14		No recovery.	--	2		
15						
16						
17						
18		Boring terminated at 17.51 ft. BGS				
19		BGS = Below Ground Surface PID = Photoionization Detector ppm = parts per million NGVD = National Geodetic Vertical Datum of 1929				
20						
21						Bottom of boring at 112.35 ft., NGVD
22						
23						
24						

Driller: Kevin Warren	*Environmental Resources Management* *498 Wando Park Blvd.* *Suite 100* *Mt. Pleasant, SC 29464*	Borehole Diameter: 6¼ inches
Drill and Installation Date: 5/17/06		Total Depth: 17.51 feet BGS
Drilling Method: Hollow Stem Auger		Sheet: 1 of 1

Client: The Affinia Group, Inc.	Northing: 954787.421	***ERM Test Boring Record***
Site Location: Wix Filtration Corp.	Easting: 2486292.585	Soil Test Boring: STB-7
City, State: Dillon, SC	NGVD Surface Elevation: 129.18 feet	Drilled By: A. E. Drilling Services, Inc.
Project Number: 41284		Logged By: M. Easterbrook

SUBSURFACE PROFILE						
Depth, Feet BGS	Symbol	Description	PID (ppm)	Standard Blow Counts per Foot ("N")	Well Installation Diagram	Remarks
		Ground Surface @ 129.18 ft., NGVD				Top of casing is 0.15 feet below ground surface (129.06 ft, NGVD)
0		Topsoil, roots to 0.3 ft.				Background PID reading was 0.4 ppm
1		Soft, brown (7.5YR 4/3), sandy, silty CLAY (CL), little roots, moist.	0.4	3		**Soil Test Boring STB-7 became monitoring well MW-3**
2–3		Soft, gray (7.5YR 5/1) mottled with strong brown (7.5YR 5/8), silty CLAY (CL), trace fine sand, moist.	5.5	4		
4–5		Same as above; becoming mottled with black (7.5YR 2.5/1) from 4.5 ft. to 5.2 ft.; at 5.2 ft., mostly gray, moist.	1.7	4		
6–7		Shelby tube collected from 6.0 ft. to 8.0 ft.	--	--		
8–9		Becoming stiff, gray (7.5YR 6/1), CLAY (CL), medium plasticity, little silt, little fine sand, wet.	0.5	14		
10–11		Color same as above; becoming silty SAND (SM), little clay to 11.8 ft.	0.5	9		Top of 0.010-inch slotted PVC screen at 122.60 ft, NGVD
12–13		Loose, gray (7.5YR 6/1), clayey SAND (SC), moist.	0.4	5		
14–16		Becoming soft, dark gray (7.5YR 4/1), sandy CLAY (SC) to 14.55 ft. Becoming strong brown (7.5YR 5/8), clayey SAND (SC), moist.	1.0	2		
17		Boring terminated at 16.56 feet BGS				
18–24		BGS = Below Ground Surface PID = Photoionization Detector ppm = parts per million NGVD = National Geodetic Vertical Datum of 1929				Bottom of boring at 112.62 ft., NGVD

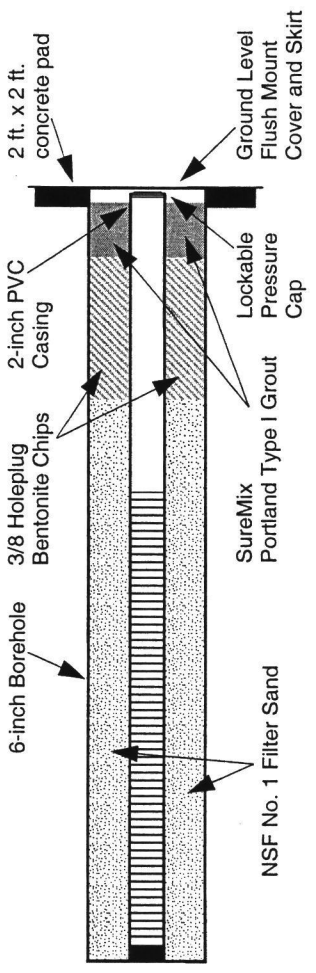

Driller: Kevin Warren	*Environmental Resources Management* *498 Wando Park Blvd.* *Suite 100* *Mt. Pleasant, SC 29464*	Borehole Diameter: 6¼ inches
Drill and Installation Date: 5/17/06		Total Depth: 16.56 feet BGS
Drilling Method: Hollow Stem Auger		Sheet: 1 of 1

Client: The Affinia Group, Inc.	Northing: 954815.481	***ERM Test Boring Record***
Site Location: Wix Filtration Corp.	Easting: 2486315.328	Soil Test Boring: STB-8
City, State: Dillon, SC	NGVD Surface Elevation: 130.66 feet	Drilled By: A. E. Drilling Services, Inc.
Project Number: 41284		Logged By: M. Easterbrook

SUBSURFACE PROFILE						
Depth, Feet BGS	Symbol	Description	PID (ppm)	Standard Blow Counts per Foot ("N")	Well Installation Diagram	Remarks
		Ground Surface @ 130.66 ft., NGVD			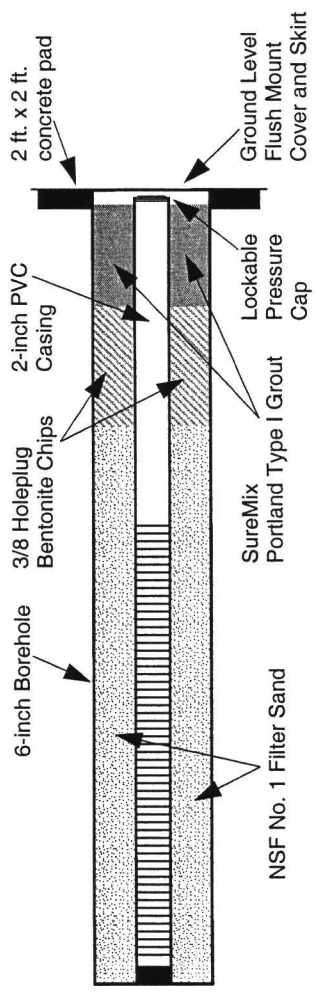	Top of casing is 0.19 feet below ground surface (130.47 ft, NGVD) Background PID reading was 0.4 ppm
0		Topsoil, roots to 0.3 ft.				
1		Medium stiff, yellowish brown (10YR 5/4), clayey SILT (CL), little root hairs, moist.	0.4	8		**Soil Test Boring STB-8 became monitoring well MW-4**
2		Stiff, very dark grayish brown (10YR 3/2), clayey SILT (CL), few roots at 2.1 ft., moist.	2.4	12		
3						
4						
5		Medium stiff, gray (10YR 6/1), clayey SILT (CL), trace fine sand, odor, moist.	18.2	8		
6						
7		Soft, dark yellowish brown (10YR 6/1), clayey SILT (CL) to 7.5 ft.	97.7	4		
8		Stiff, grayish brown (10YR 5/2), CLAY (CH), little silt, high plasticity, trace sand, wet, odor.	21.7	11		
9		Stiff, same color as above mottled with yellowish brown (10YR 5/6), silty CLAY, plastic, moist.				
10						Top of 0.010-inch slotted PVC screen at 123.66 ft, NGVD
11		Stiff, gray (2.5Y 5/1), silty CLAY (CL), trace fine sand, trace tree roots at 11.5 ft., moist.	5.8	11		
12		Soft, gray (2.5Y 6/1), sandy CLAY (SC), trace tree roots, very moist.	0.5	5		
13						
14		Same as above; little silt at 14.5 ft.	21.5	3		
15						
16						
17		Boring terminated at 16.93 feet BGS				
18						
19		BGS = Below Ground Surface PID = Photoionization Detector ppm = parts per million				
20		NGVD = National Geodetic Vertical Datum of 1929				Bottom of boring at 113.73 ft., NGVD
21						
22						
23						
24						

Driller: Kevin Warren	*Environmental Resources Management* *498 Wando Park Blvd.* *Suite 100* *Mt. Pleasant, SC 29464*	Borehole Diameter: 6¼ inches
Drill and Installation Date: 5/17/06		Total Depth: 16.93 feet BGS
Drilling Method: Hollow Stem Auger		Sheet: 1 of 1

Client: The Affinia Group, Inc.	Northing: 954697.248	***ERM Test Boring Record***
Site Location: Wix Filtration Corp.	Easting: 2486325.231	Soil Test Boring: STB-9
City, State: Dillon, SC	NGVD Surface Elevation: 129.16 feet	Drilled By: A. E. Drilling Services, Inc.
Project Number: 41284		Logged By: M. Easterbrook

SUBSURFACE PROFILE					
Depth, Feet BGS	Symbol	Description	PID (ppm)	Standard Blow Counts per Foot ("N")	Remarks
					Background PID reading was 0.4 ppm
		Ground Surface @ 129.16 ft., NGVD			
0		Topsoil, root hairs to 0.3 ft.			
1		Stiff, brown grading to red (2.5YR 5/8), clayey SILT (ML), trace fine sand, some roots, slightly moist.	5.2	11	
2		Firm, reddish brown (5YR 4/3), clayey SILT (CL), moist.	3.5	6	
3		At 3.1 ft., becoming firm, dark reddish gray (5YR 4/2), silty CLAY (CL), trace fine sand, color stratification, moist.			
4		Same as above; becoming CLAY (CL), little silt, moist.	0.5	5	
5					
6		Becoming gray (5YR 5/1), silty CLAY (CL), trace fine sand, trace roots, slight odor, moist.	4.9	4	
7					
8		Becoming stiff, brown (7.5YR 5/3) to 8.5 ft.; becoming light gray (10YR 7/1), slight odor, moist.	46.0	12	
9					
10		Loose, gray (2.5Y 6/1), clayey SAND (SC), slight odor, moist.	19.8	8	
11					
12		Becoming soft, grayish brown (10YR 5/2), CLAY (SC), few to trace fine sand, trace silt, wet.	0.5	3	
13					
14		Becoming soft, light yellowish brown (2.5Y 6/3), sandy CLAY (SC), wet.	0.7	3	
15		Boring terminated at 15.00 feet BGS			Bottom of boring at 114.16 ft., NGVD
16					
17		BGS = Below Ground Surface PID = Photoionization Detector ppm = parts per million NGVD = National Geodetic Vertical Datum of 1929			
18					
19					
20					
21					
22					
23					
24					

Driller: Kevin Warren	*Environmental Resources Management*	Borehole Diameter: 6 inches
Drill Completion Date: 5/17/06	*498 Wando Park Blvd.*	Total Depth: 15.00 feet BGS
Drilling Method: Hollow Stem Auger	ERM *Suite 100* *Mt. Pleasant, SC 29464*	Sheet: 1 of 1

Client: The Affinia Group, Inc.	Northing: 954922.054	***ERM Test Boring Record***
Site Location: Wix Filtration Corp.	Easting: 2486290.450	Soil Test Boring: STB-10
City, State: Dillon, SC	NGVD Surface Elevation: 131.38 feet	Drilled By: A. E. Drilling Services, Inc.
Project Number: 41284		Logged By: M. Easterbrook

SUBSURFACE PROFILE					
Depth, Feet BGS	Symbol	Description	PID (ppm)	Standard Blow Counts per Foot ("N")	Remarks
					Background PID reading was 0.4 ppm
		Ground Surface @ 131.38 ft., NGVD			
0		Topsoil, root hairs to 0.3 ft.			
1		Stiff, brown grading to red (7.5YR 4/4), sandy SILT (ML), little clay, trace roots, slightly moist.	0.4	12	
2			0.5	9	
3					
4		Stiff, very dark grayish brown (10YR 3/2), silty CLAY (CL), trace fine sand, moist.	0.5	2	
5		Becoming very soft, grayish brown (10YR 5/2), CLAY (CL), little silt, trace fine sand, trace roots, moist.			
6					
7		Same as above; color becoming mottled with yellowish brown (10YR 5/8), moist.	0.5	1	
8			0.5	7	
9		Becoming medium stiff brownish yellow (10YR 6/8) mottled with gray (10YR 6/1), silty CLAY (CL) and fine SAND, moist.			
10		Shelby Tube collected from 10 to 12 ft.			
11			--	--	
12					
13		Same color as above; becoming medium stiff, sandy CLAY (SC), little silt, wet.	0.5	7	
14					
15		Becoming loose, gray (2.5YR 6/1), clayey SAND (SC), moist.	0.5	6	
16		Boring terminated at 15.50 feet BGS			Bottom of boring at 115.88 ft., NGVD
17		BGS = Below Ground Surface			
18		PID = Photoionization Detector ppm = parts per million			
19		NGVD = National Geodetic Vertical Datum of 1929			
20					
21					
22					
23					
24					

Driller: Kevin Warren	*Environmental Resources Management* *498 Wando Park Blvd.* *Suite 100* *Mt. Pleasant, SC 29464*	Borehole Diameter: 6 inches
Drill Completion Date: 5/17/06		Total Depth: 15.50 feet BGS
Drilling Method: Hollow Stem Auger		Sheet: 1 of 1

Attachment B
Well Development Records

MONITORING WELL DEVELOPMENT RECORD

ERM

WELL NUMBER	MW-1
PROJECT NUMBER	41284
PROJECT NAME	Affinia-Wix
DATE INSTALLED	5/17/06
DATE DEVELOPED	5/19/06

WELL DATA

Constructed Depth of Well (ft.)	17.27
Radius of Well, r_c (ft.)	r_c = 0.0833
Radius of Borehole/Sand Pack, r_a (ft.)	r_a = 0.25
Vertical Length of Standing Water in Well Casing, h_s (ft.)	h_s = 12.95
Effective Porosity of Sand Pack Material, n_e	n_e = 0.30
Height of Well Casing Above/Below Ground Surface (ft.)	3.18

MEASUREMENTS AND CALCULATIONS

Depth to Static Water Before Development (ft.)	4.15
Depth to Top of Sediment Before Development (ft.)	17.10
Vertical Length of Standing Water in Well Casing, h_c (ft.)	h_c = 12.95
Volume of Water in Well and Sand Pack Prior to Development, V (gallons) where:	v = 7.18

$$V = \pi\, 7.48\ \text{gal/ft.}^3\ [\,(r_c^{\,2} h_c) + n_e h_s (r_a^2 - r_c^2)]$$

Nominal Quantity of Water to Remove for Development (gallons) (This is = 5V unless otherwise justified)	5v = 35.9

DEVELOPMENT OBSERVATIONS

Physical Character of Water murky to start, clearing up, odor; slightly turbid (~35 NTU's as a guess) when pumping stopped.

Type and Size of Well Development and Measuring Equipment poly tubing and submersible Whale pump into 55-gal drum

Weather Observations partly cloudy, 60's (a.m.)

Parameter	*Gallons Removed from Well 0	10	20	25	40		
Time	0907	0937	0927	1242			
Spec. Conductance (μmhos/cm)	269	229	227	205			
Temperature (°C)	18.1	17.3	19.8	19.7			
PH (Standard Units)	5.45	5.18	5.21	5.20			

Total Quantity of Water Removed (gallons)	25
Depth of Static Water After Development (ft.)	12.95 @ 13:15 on 5/19/06
Depth to Top of Sediment After Development (ft.)	17.25

* Well went dry several times over the development period. Per QAPP, development was stopped. After 25 gal., indicators had stabilized and water clearing up.

MONITORING WELL DEVELOPMENT RECORD

ERM

WELL NUMBER	MW-2
PROJECT NUMBER	41284
PROJECT NAME	Affinia-Wix
DATE INSTALLED	5/17/06
DATE DEVELOPED	5/19/06

WELL DATA

Constructed Depth of Well (ft.)	17.51
Radius of Well, r_c (ft.)	r_c = 0.0833
Radius of Borehole/Sand Pack, r_a (ft.)	r_a = 0.25
Vertical Length of Standing Water in Well Casing, h_s (ft.)	h_s = 13.07
Effective Porosity of Sand Pack Material, n_e	n_e = 0.30
Height of Well Casing Above/Below Ground Surface (ft.)	3.75

MEASUREMENTS AND CALCULATIONS

Depth to Static Water Before Development (ft.)	3.98
Depth to Top of Sediment Before Development (ft.)	17.05
Vertical Length of Standing Water in Well Casing, h_c (ft.)	h_c = 13.07
Volume of Water in Well and Sand Pack Prior to Development, V (gallons) where:	v = 7.25

$$V = \pi\ 7.48\ \text{gal/ft.}^3\ [\ (r_c^{\ 2} h_c) + n_e h_s (r_a^2 - r_c^2)]$$

Nominal Quantity of Water to Remove for Development (gallons) (This is = 5V unless otherwise justified)	5v = 36.25

DEVELOPMENT OBSERVATIONS

Physical Character of Water: muddy to start, clearing, almost clear at completion of development.

Type and Size of Well Development and Measuring Equipment: poly tubing and submersible whale pump into 55-gal. drum

Weather Observations: partly cloudy, 50's

Parameter	Gallons Removed from Well 0	10	20	30	40	
Time	0720	0727	0737	0745	0803	
Spec. Conductance (μmhos/cm)	315	273	231	216	202	
Temperature (°C)	16.7	16.5	16.2	16.4	16.7	
PH (Standard Units)	5.53	5.48	5.57	5.58	5.61	

Total Quantity of Water Removed (gallons)	45 gal
Depth of Static Water After Development (ft.)	3.75 @ 1000
Depth to Top of Sediment After Development (ft.)	17.51

MONITORING WELL DEVELOPMENT RECORD

ERM

WELL NUMBER	MW-3
PROJECT NUMBER	41284
PROJECT NAME	Affinia-Wix
DATE INSTALLED	5/17/06
DATE DEVELOPED	5/18/06

WELL DATA

Constructed Depth of Well (ft.)	16.56
Radius of Well, r_c (ft.)	r_c = 0.0833
Radius of Borehole/Sand Pack, r_a (ft.)	r_a = 0.25
Vertical Length of Standing Water in Well Casing, h_s (ft.)	h_s = 12.80
Effective Porosity of Sand Pack Material, n_e	n_e = 0.30
Height of Well Casing Above/Below Ground Surface (ft.)	3.75

MEASUREMENTS AND CALCULATIONS

Depth to Static Water Before Development (ft.)	3.20
Depth to Top of Sediment Before Development (ft.)	16.0
Vertical Length of Standing Water in Well Casing, h_c (ft.)	h_c = 12.80
Volume of Water in Well and Sand Pack Prior to Development, V (gallons) where:	v = 7.1

$$V = \pi\, 7.48\ \text{gal/ft.}^3\ [\,(r_c^{\,2} h_c) + n_e h_s (r_a^{\,2} - r_c^{\,2})]$$

Nominal Quantity of Water to Remove for Development (gallons) (This is = 5V unless otherwise justified)	5v = 35.5

DEVELOPMENT OBSERVATIONS

Physical Character of Water: murky to start; cleared up after 30 gal.

Type and Size of Well Development and Measuring Equipment: poly tubing and submersible Whale pump into 55-gal drum, pump stop and start; water draws down fast; recharges fast.

Weather Observations: partly cloudy, 80°F

Parameter	Gallons Removed from Well: 0	10	20	30	40	
Time	1325	1334	1354	1430	1507	
Spec. Conductance (μmhos/cm)	259	134.3	129.6	135.9	134.1	
Temperature (°C)	19.7	19.3	19.6	19.8	19.6	
PH (Standard Units)	7.39	7.41	6.33	6.24	6.11	

Total Quantity of Water Removed (gallons)	42
Depth of Static Water After Development (ft.)	4.55 @ 1540
Depth to Top of Sediment After Development (ft.)	16.55

3.08 (5/19/06) @ 0850 (Note: stickup cut below grade for pad installation).

ERM

MONITORING WELL DEVELOPMENT RECORD

WELL NUMBER: MW-4
PROJECT NUMBER: 41284
PROJECT NAME: Affinia-Wix
DATE INSTALLED: 5/17/06
DATE DEVELOPED: 5/18/06

WELL DATA

Constructed Depth of Well (ft.) 16.93
Radius of Well, r_c (ft.) r_c = 0.0833
Radius of Borehole/Sand Pack, r_a (ft.) r_a = 0.25
Vertical Length of Standing Water in Well Casing, h_s (ft.) h_s = 12.0
Effective Porosity of Sand Pack Material, n_e n_e = 0.30
Height of Well Casing Above/Below Ground Surface (ft.) 1.02

MEASUREMENTS AND CALCULATIONS

Depth to Static Water Before Development (ft.) 4.90
Depth to Top of Sediment Before Development (ft.) 16.90
Vertical Length of Standing Water in Well Casing, h_c (ft.) h_c = 12.0
Volume of Water in Well and Sand Pack Prior to Development, V (gallons) where: v = 6.65

$$V = \pi\, 7.48\ \text{gal/ft.}^3\ [\,(r_c^{\,2} h_c) + n_e h_s (r_a^{\,2} - r_c^{\,2})]$$

Nominal Quantity of Water to Remove for Development (gallons) (This is = 5V unless otherwise justified) 5v = 33.3

DEVELOPMENT OBSERVATIONS

Physical Character of Water: odor, murky to start, cleared up significantly, though not completely clear, slight odor

Type and Size of Well Development and Measuring Equipment: poly tubing and submersible Whale pump into 55-gal. drum

Weather Observations: partly cloudy, 70°, cloudy, light rain

Parameter	Gallons Removed from Well: 0	10	20	30	37 ~~42~~	
Time	1521	1543	1607	1655	1750	
Spec. Conductance (μmhos/cm)	365	363	359	353	383	
Temperature (°C)	19.9	20.3	20.1	19.6	19.4	
PH (Standard Units)	5.90	5.89	5.88	5.88	5.96	

Total Quantity of Water Removed (gallons) 37 gal
*Depth of Static Water After Development (ft.) 5.03 (5/19/06) - 0856
Depth to Top of Sediment After Development (ft.) 16.90

*Note: Stickup cut below grade for installation of pad.

Attachment C
ERM Ground Water Sampling Logs
and Field Sampling Reports

ERM LOW FLOW/PURGE GROUND WATER SAMPLING LOG

Project: Wix
Site: Dillon, SC
Well No.: MW-4
Date: 5/24/06
Well Depth: 16.90
Well Diameter: 2"
Sampling Device: peristaltic
DTW: 4.30
Tubing Type: teflon-lined
Measuring Point: TOC
Sampling Time: 1255
Sampling Personnel: CRS/MSS
Description of Sample: clear
Temp outside 85
Volume of Water Purged: 2 gal
Rate of Pumping: 100 ml/min

Range	0-55	0-9.9	0-19.99	0-14	± 1999	0-800		
TIME	**Temp 3%**	**Cond. 3%**	**DO 10%**	**pH 0.1**	**ORP ±10**	**Turbidity 10%**	**Water Level**	**Water Clarity**
1140	21.76	0.233	5.46	5.15	166.5	-0.5	5.02	clear
1145	21.56	0.233	4.11	5.05	172.3	-0.5	5.10	
1150	21.43	0.233	3.34	4.98 ~~5.47~~ CRS	182.6	0.5	5.25	
1155	21.89	0.238	2.78	4.90	186.2	0.4	5.29	
1200	22.35	0.242	2.24	4.85	187.0	0.3	5.32	
1205	22.47	0.245	1.86	4.77	170.7	4.7	5.33	
1210	22.32	0.245	1.52	4.73	152.1	4.9	5.34	
1215	22.10	0.246	1.49	4.70	138.2	5.6	5.35	
1220	21.99	0.247	1.45	4.68	126.3	6.4	5.36	
1225	22.15	0.248	1.38	4.64	130.7	6.1	5.37	
1230	22.30	0.249	1.30	4.62	135.4	5.8	5.37	
1235	22.38	0.249	1.21	4.61	129.3	3.5	5.38	
1240	22.48	0.250	1.16	4.60	128.2	2.6	5.38	
1245	22.50	0.250	1.12	4.61	125.4	3.1	5.39	
1250	22.52	0.249	1.10	4.62	124.3	2.8	5.39	
1255	Sample Time							

Type of sample collected: ~~VOC 8260B~~ aqueous
Analysis sampled for: VOC 8260B

Information: 2 in. = 617 ml/ft. 4 in. = 2470 ml/ft. $Vol_{sphere} = 4/3\pi r^3$ $Vol_{cyl.} = \pi r^2 h$

00

ERM LOW FLOW/PURGE GROUND WATER SAMPLING LOG

Project: Wix
Site: Dillon, SC
Well No.: MW-3
Date: 5/24/06
Well Depth: 16.60
Well Diameter: 2 inch
Sampling Device: peristaltic
DTW: 2.82
Tubing Type: teflon lined
Measuring Point: TOC
Sampling Time: 1645
Sampling Personnel: CRS
Description of Sample: clear
Volume of Water Purged: 2.5 gal
Rate of Pumping: 150 ml/min

Range	0-55	0-9.9	0-19.99	0-14	± 1999	0-800		
TIME	**Temp 3%**	**Cond. 3%**	**DO 10%**	**pH 0.1**	**ORP ±10**	**Turbidity 10%**	**Water Level**	**Water Clarity**
1545	19.06	0.242	5.87	5.15	71.9	97.0	3.61	clear slightly sandy
1550	18.89	0.240	1.97	4.80	83.0	98.1	3.71	
1555	18.64	0.238	1.28	4.76	83.0	99.5	3.75	
1600	18.	0.238	1.11	4.75	84.2	85.0	3.76	
1605	18.51	0.239	1.02	4.74	85.7	78.8	3.78	
1610	18.68	0.240	0.96	4.77	85.2	56.2	3.78	
1615	18.84	0.243	0.84	4.82	85.8	43.0	3.78	
1620	18.64	0.246	0.79	4.82	86.5	20.2	3.79	
1625	18.51	0.247	0.71	4.82	86.6	15.1	3.80	
1630	18.56	0.245	0.66	4.83	89.2	9.0	3.80	
1635	18.58	0.244	0.64	4.85	90.2	8.2	3.80	
1640	18.59	0.244	0.62	4.85	89.3	7.1	3.81	
1645	Sample Time							

Type of sample collected: grab
Analysis sampled for: VOC 8260B

Information: 2 in. = 617 ml/ft. 4 in. = 2470 ml/ft. $Vol_{sphere} = 4/3\pi r^3$ $Vol_{cyl.} = \pi r^2 h$

ERM LOW FLOW/PURGE GROUND WATER SAMPLING LOG

Project: Wix
Site: Dillon, SC
Well No.: MW-2
Date: 5/24/06
Well Depth: 17.50
Well Diameter: 2-inch
Sampling Device: peristaltic
DTW: 3.58
Tubing Type: teflon-lined
Measuring Point: TOC
Sampling Time: 1540
Sampling Personnel: CRS/MSS
Description of Sample: clear
Volume of Water Purged: 2 gal
Rate of Pumping: 125 ml/min

Range	0-55	0-9.9	0-19.99	0-14	± 1999	0-800		
TIME	**Temp 3%**	**Cond. 3%**	**DO 10%**	**pH 0.1**	**ORP ±10**	**Turbidity 10%**	**Water Level**	**Water Clarity**
1450	19.80	0.258	3.88	4.26	101.3	1.0	4.10	clear
1455	19.35	0.266	2.33	4.24	155	2.8	4.11	clear
1500	19.19	0.268	1.92	4.25	181	3.0	4.11	"
1505	19.19	0.267	1.59	4.26	192	4.1	4.11	"
1510	19.18	0.266	1.48	4.26	209	6.5	4.11	"
1520	19.17	0.259	1.24	4.25	210	6.9	4.10	"
1525	19.18	0.258	1.21	4.23	212	6.1	4.09	"
1530	19.18	0.257	1.18	4.23	209	5.9	4.09	"
1535	19.17	0.256	1.17	4.22	206	5.8	4.08	"
1540	Sample Time							

Type of sample collected: grab
Analysis sampled for: VOC 8260

Information: 2 in. = 617 ml/ft. 4 in. = 2470 ml/ft. $Vol_{sphere} = 4/3\pi r^3$ $Vol_{cyl.} = \pi r^2 h$

ERM LOW FLOW/PURGE GROUND WATER SAMPLING LOG

Project: Wix
Site: Dillon, SC
Well No.: MW-1
Date: 5/25/06
Well Depth: 17.30
Well Diameter: 2 inch
Sampling Device: peristaltic
DTW: 3.85
Tubing Type: teflon lined
Measuring Point: TOC
Sampling Time: 0915
Sampling Personnel: CRS/MSS
Description of Sample: Clear
Volume of Water Purged: 1.25 gal
Rate of Pumping: 75 - 100 ml/min

Range	0-55	0-9.9	0-19.99	0-14	± 1999	0-800		
TIME	**Temp 3%**	**Cond. 3%**	**DO 10%**	**pH 0.1**	**ORP ±10**	**Turbidity 10%**	**Water Level**	**Water Clarity**
0825	19.94	0.294	7.42	5.54	27	0.5	4.20	Clear
0830	19.81	0.295	2.25	5.47	44	0.5	4.32	"
0835	19.75	0.295	1.64	5.45	51	0.6	4.47	"
0840	19.80	0.296	1.38	5.44	51	0.5	4.51	"
0845	19.88	0.297	1.28	5.44	52	0.4	4.55	"
0850	19.91	0.298	1.19	5.44	53	0.4	4.60	"
0855	19.96	0.299	1.12	5.44	54	0.5	4.65	"
0900	20.15	0.298	1.06	5.44	53	0.3	4.68	"
0905	20.18	0.298	1.04	5.43	53	0.2	4.69	"
0910	20.15	0.298	1.01	5.43	53	0.3	4.72	"
0915	Sample	Time						

Type of sample collected: grab
Analysis sampled for: VOC 8260B

Information: 2 in. = 617 ml/ft. 4 in. = 2470 ml/ft. $Vol_{sphere} = 4/3\pi r^3$ $Vol_{cyl.} = \pi r^2 h$

FIELD SAMPLING REPORT

ERM

498 Wando Park Blvd Suite 100
Mt. Pleasant, SC 29464
(843) 856-4270

JOB NUMBER 41284
JOB NAME Wix
SAMPLING POINT (LOCATION) SW-1
DATE 5/24/06 TIME

SAMPLING INFORMATION

SAMPLE I.D. NUMBER: _____ HAZARDOUS?: ____ YES ____ NO ____ UNKNOWN

SOIL SAMPLING DATA:

SAMPLING DATE: _____
TIME: _____

SAMPLER TYPE & MATERIAL Stainless Steel Hand Auger : Geoprobe (polyethylene sleeve) (circle)
SAMPLING DEPTH _____
SAMPLE DESCRIPTION _____

WELL SAMPLING DATA:

SAMPLING DATE: _____
TIME: _____

PURGE METHOD & MATERIALS Peristaltic pump : hand bailer / polyethylene : teflon / tubing : bailer (circle)
VOLUME OF WATER IN WELL & SAND PACK (gallons) _____
VOLUME OF WATER PURGED (gallons) _____
PURGE DATE _____ START TIME _____ END TIME _____
SAMPLER TYPE & MATERIAL Peristaltic pump : hand bailer / polyethylene : teflon / tubing : bailer (circle)
SAMPLE DESCRIPTION _____

TOTAL WELL DEPTH _____ ft. DEPTH TO GROUND WATER _____ ft.

CONTAINER					
TYPE	VOLUME	PRESERVATIVE/PREPARATION	NUMBER	FILTERING	ANALYSIS

FIELD MEASUREMENTS

PARAMETER	EQUIPMENT ID	1st READING	2nd READING	3rd READING	4th READING
pH (STO UNITS)	YSI 6920	6.79			
TEMP (C)		19.19			
SPEC. COND (um/sm)		0.178			
TIME					
DATE	5/24/06				

GENERAL INFORMATION

WEATHER _____ AIR TEMP. _____

SAMPLES COLLECTED BY _____

SPECIAL HANDLING SAMPLES PACKED IN COOLER ON ICE

MODE OF SHIPMENT ____ CAR/TRUCK ____ PLANE ____ COMMER VEH. _____ OTHER

COMMENTS (CALIBRATIONS, FIELD MODIFICATIONS, INSTRUMENT PROBLEMS) _____

N/A: Not Applicable

FIELD SAMPLING REPORT

ERM

498 Wando Park Blvd Suite 100
Mt. Pleasant, SC 29464
(843) 856-4270

JOB NUMBER 41284
JOB NAME Wix
SAMPLING POINT (LOCATION) SW-2
DATE 5/24/06 TIME

SAMPLING INFORMATION

SAMPLE I.D. NUMBER: _____ HAZARDOUS?: ____ YES ____ NO ____ UNKNOWN

OIL SAMPLING DATA:

SAMPLING DATE: _____
IME: _____

SAMPLER TYPE & MATERIAL Stainless Steel Hand Auger : Geoprobe (polyethylene sleeve) (circle)
SAMPLING DEPTH _____
SAMPLE DESCRIPTION _____

/ELL SAMPLING DATA:

AMPLING DATE: _____
TIME: _____

PURGE METHOD & MATERIALS Peristaltic pump : hand bailer / polyethylene : teflon / tubing : bailer (circle)
VOLUME OF WATER IN WELL & SAND PACK (gallons) _____
VOLUME OF WATER PURGED (gallons) _____
PURGE DATE _____ START TIME _____ END TIME _____
SAMPLER TYPE & MATERIAL Peristaltic pump : hand bailer / polyethylene : teflon / tubing : bailer (circle)
SAMPLE DESCRIPTION _____

TOTAL WELL DEPTH _____ ft. DEPTH TO GROUND WATER _____ ft.

CONTAINER					
TYPE	VOLUME	PRESERVATIVE/PREPARATION	NUMBER	FILTERING	ANALYSIS

FIELD MEASUREMENTS

PARAMETER	EQUIPMENT ID	1st READING	2nd READING	3rd READING	4th READING
pH (STO UNITS)	YSI 6920	6.54			
TEMP (C)		19.33			
SPEC. COND (um/sm)		0.120			
TIME					
DATE	5/24/06				

GENERAL INFORMATION

WEATHER Sunny / Hot AIR TEMP. _____

SAMPLES COLLECTED BY _____

PECIAL HANDLING SAMPLES PACKED IN COOLER ON ICE

ODE OF SHIPMENT ____ CAR/TRUCK ____ PLANE ____ COMMER VEH. _____ OTHER

OMMENTS (CALIBRATIONS, FIELD MODIFICATIONS, INSTRUMENT PROBLEMS) _____

N/A: Not Applicable

FIELD SAMPLING REPORT

ERM

498 Wando Park Blvd Suite 100
Mt. Pleasant, SC 29464
(843) 856-4270

JOB NUMBER 41284
JOB NAME Affinia-Wix
SAMPLING POINT (LOCATION) STB-1
DATE 5/16/06 TIME 1035

SAMPLING INFORMATION

SAMPLE I.D. NUMBER: STB-1 (4-6) HAZARDOUS?: ____ YES ____ NO ___X UNKNOWN

OIL SAMPLING DATA:

SAMPLING DATE: 5/16/06
ME: 1035

SAMPLER TYPE & MATERIAL split barrel sampler
SAMPLING DEPTH 4-6 ft.
SAMPLE DESCRIPTION Medium stiff, dark yellowish brown, silty CLAY, mottled with orange, FILL, odor.

ELL SAMPLING DATA:

AMPLING DATE: ____
TIME: ____

PURGE METHOD & MATERIALS ____
VOLUME OF WATER IN WELL & SAND PACK (gallons) ____
VOLUME OF WATER PURGED (gallons) ____
PURGE DATE ____ START TIME ____ END TIME ____
SAMPLER TYPE & MATERIAL ____
SAMPLE DESCRIPTION ____

TOTAL WELL DEPTH ____ ft. DEPTH TO GROUND WATER ____ ft.

CONTAINER TYPE	CONTAINER VOLUME	PRESERVATIVE/PREPARATION	NUMBER	FILTERING	COMMENTS
glass	40 ml	Sodium Bisulfate	2	–	8260B
glass	↓	–	1	–	↓
glass amber	↓	Methanol	1	–	↓

FIELD MEASUREMENTS

PARAMETER	EQUIPMENT ID	1st READING	2nd READING	3rd READING	4th READING
pH (STO UNITS)					
TEMP (C)					
SPEC. COND (um/sm)					
TIME					
DATE					

GENERAL INFORMATION

WEATHER Sunny to partly cloudy AIR TEMP. 70°

AMPLES COLLECTED BY MCE

PECIAL HANDLING Samples cooled to 4°C contained in cooler on ice

ODE OF SHIPMENT ___X___ CAR/TRUCK ____ PLANE ____ COMMER VEH. ____ OTI

OMMENTS (CALIBRATIONS, FIELD MODIFICATIONS, INSTRUMENT PROBLEMS) ____

A: Not Applicable

FIELD SAMPLING REPORT

ERM

498 Wando Park Blvd Suite 100
Mt. Pleasant, SC 29464
(843) 856-4270

JOB NUMBER 41284
JOB NAME Affinia-Wix
SAMPLING POINT (LOCATION) STB-2
DATE 5/16/06 TIME 1240

SAMPLING INFORMATION

SAMPLE I.D. NUMBER: STB-2(6-8) HAZARDOUS?: ____ YES ____ NO X UNKNOWN

OIL SAMPLING DATA:

SAMPLING DATE: 5/16/06
TIME: 1240

SAMPLER TYPE & MATERIAL: Split barrel sampler
SAMPLING DEPTH: 6-8 ft
SAMPLE DESCRIPTION: Stiff, light gray and orange, silty CLAY, FILL, odor.

WELL SAMPLING DATA:

SAMPLING DATE: ____
TIME: ____

PURGE METHOD & MATERIALS ____
VOLUME OF WATER IN WELL & SAND PACK (gallons) ____
VOLUME OF WATER PURGED (gallons) ____
PURGE DATE ____ START TIME ____ END TIME ____
SAMPLER TYPE & MATERIAL ____
SAMPLE DESCRIPTION ____

TOTAL WELL DEPTH ____ ft. DEPTH TO GROUND WATER ____ ft.

CONTAINER TYPE	CONTAINER VOLUME	PRESERVATIVE/PREPARATION	NUMBER	FILTERING	COMMENTS
glass	40 ml	Sodium Bisulfate	2	–	8260B
glass	↓	—	1	–	↓
glass amber		Methanol	1	–	

FIELD MEASUREMENTS

PARAMETER	EQUIPMENT ID	1st READING	2nd READING	3rd READING	4th READING
pH (STO UNITS)					
TEMP (C)					
SPEC. COND (um/sm)					
TIME					
DATE					

GENERAL INFORMATION

WEATHER partly cloudy AIR TEMP. 70°

SAMPLES COLLECTED BY MCE

SPECIAL HANDLING Samples cooled to 4ºC contained in cooler on ice

MODE OF SHIPMENT X CAR/TRUCK ____ PLANE ____ COMMER VEH. ____ OTI

COMMENTS (CALIBRATIONS, FIELD MODIFICATIONS, INSTRUMENT PROBLEMS) ____

N/A: Not Applicable

FIELD SAMPLING REPORT

ERM

498 Wando Park Blvd Suite 100
Mt. Pleasant, SC 29464
(843) 856-4270

JOB NUMBER 41284
JOB NAME Affinia-Wix
SAMPLING POINT (LOCATION) STB-3
DATE 5/16/06 TIME 1430

SAMPLING INFORMATION

SAMPLE I.D. NUMBER: STB-3(8-10) HAZARDOUS?: ____ YES ____ NO X UNKNOWN

SOIL SAMPLING DATA:

SAMPLING DATE: 5/16/06
TIME: 1430

SAMPLER TYPE & MATERIAL: split barrel sampler
SAMPLING DEPTH: 8-10 ft.
SAMPLE DESCRIPTION: Stiff, dark grayish brown, silty CLAY, trace sand, odor, FILL.

WELL SAMPLING DATA:

SAMPLING DATE: ____
TIME: ____

PURGE METHOD & MATERIALS ____
VOLUME OF WATER IN WELL & SAND PACK (gallons) ____
VOLUME OF WATER PURGED (gallons) ____
PURGE DATE ____ START TIME ____ END TIME ____
SAMPLER TYPE & MATERIAL ____
SAMPLE DESCRIPTION ____

TOTAL WELL DEPTH ____ ft. DEPTH TO GROUND WATER ____ ft.

CONTAINER TYPE	CONTAINER VOLUME	PRESERVATIVE/PREPARATION	NUMBER	FILTERING	COMMENTS
glass	40ml	Sodium Bisulfate	2	–	8260B
glass	↓	–	1	–	↓
glass amber		Methanol	1	–	

FIELD MEASUREMENTS

PARAMETER	EQUIPMENT ID	1st READING	2nd READING	3rd READING	4th READING
pH (STO UNITS)					
TEMP (C)					
SPEC. COND (um/sm)					
TIME					
DATE					

GENERAL INFORMATION

WEATHER Sunny to partly cloudy AIR TEMP. 75°

SAMPLES COLLECTED BY MCE

SPECIAL HANDLING Samples cooled to 4°C contained in cooler on ice

MODE OF SHIPMENT X CAR/TRUCK ____ PLANE ____ COMMER VEH. ____ OTI

COMMENTS (CALIBRATIONS, FIELD MODIFICATIONS, INSTRUMENT PROBLEMS) ____

N/A: Not Applicable

FIELD SAMPLING REPORT

ERM

498 Wando Park Blvd Suite 100
Mt. Pleasant, SC 29464
(843) 856-4270

JOB NUMBER 41284
JOB NAME Affinia-Wix
SAMPLING POINT (LOCATION) STB-4
DATE 5/16/06 TIME 1545

SAMPLING INFORMATION

SAMPLE I.D. NUMBER: STB-4(4-6) HAZARDOUS?: ____ YES ____ NO X UNKNOWN

OIL SAMPLING DATA:

SAMPLING DATE: 5/16/06
ME: 1545

SAMPLER TYPE & MATERIAL: split barrel sampler
SAMPLING DEPTH: 4-6 ft
SAMPLE DESCRIPTION: Medium stiff, gray, clayey SILT, FILL.

'ELL SAMPLING DATA:

AMPLING DATE: ____
TIME: ____

PURGE METHOD & MATERIALS ____
VOLUME OF WATER IN WELL & SAND PACK (gallons) ____
VOLUME OF WATER PURGED (gallons) ____
PURGE DATE ____ START TIME ____ END TIME ____
SAMPLER TYPE & MATERIAL ____
SAMPLE DESCRIPTION ____

TOTAL WELL DEPTH ____ ft. DEPTH TO GROUND WATER ____ ft.

CONTAINER TYPE	CONTAINER VOLUME	PRESERVATIVE/PREPARATION	NUMBER	FILTERING	COMMENTS
glass	40ml	Sodium Bisulfate	2	—	8260B
glass	↓	—	1	—	↓
glass amber		Methanol	1	—	

FIELD MEASUREMENTS

PARAMETER	EQUIPMENT ID	1st READING	2nd READING	3rd READING	4th READING
pH (STO UNITS)					
TEMP (C)					
SPEC. COND (um/sm)					
TIME					
DATE					

GENERAL INFORMATION

WEATHER partly cloudy AIR TEMP. 75°

SAMPLES COLLECTED BY MCE

'ECIAL HANDLING Samples cooled to 4ºC contained in cooler on ice

ODE OF SHIPMENT X CAR/TRUCK ____ PLANE ____ COMMER VEH. ____ OTI

OMMENTS (CALIBRATIONS, FIELD MODIFICATIONS, INSTRUMENT PROBLEMS) ____

N/A: Not Applicable

FIELD SAMPLING REPORT

ERM

498 Wando Park Blvd Suite 100
Mt. Pleasant, SC 29464
(843) 856-4270

JOB NUMBER 41284
JOB NAME Affinia-Wix
SAMPLING POINT (LOCATION) STB-5
DATE 5/17/06 TIME 0715

SAMPLING INFORMATION

SAMPLE I.D. NUMBER: STB-5(4-6) HAZARDOUS?: ____ YES ____ NO X UNKNOWN

OIL SAMPLING DATA:

SAMPLING DATE: 5/17/06
TIME: 0715

SAMPLER TYPE & MATERIAL: split barrel sampler
SAMPLING DEPTH: 4-6 ft.
SAMPLE DESCRIPTION: Medium stiff, gray, silty CLAY, FILL, trace sand, odor

WELL SAMPLING DATA:

SAMPLING DATE: ____
TIME: ____

PURGE METHOD & MATERIALS ____
VOLUME OF WATER IN WELL & SAND PACK (gallons) ____
VOLUME OF WATER PURGED (gallons) ____
PURGE DATE ____ START TIME ____ END TIME ____
SAMPLER TYPE & MATERIAL ____
SAMPLE DESCRIPTION ____

TOTAL WELL DEPTH ____ ft. DEPTH TO GROUND WATER ____ ft.

CONTAINER TYPE	CONTAINER VOLUME	PRESERVATIVE/PREPARATION	NUMBER	FILTERING	COMMENTS
glass	40ml	Sodium Bisulfate	2	–	8260B
glass	↓	–	1	–	"
glass amber		Methanol	1	–	"

FIELD MEASUREMENTS

PARAMETER	EQUIPMENT ID	1st READING	2nd READING	3rd READING	4th READING
pH (STO UNITS)					
TEMP (C)					
SPEC. COND (um/sm)					
TIME					
DATE					

GENERAL INFORMATION

WEATHER Sunny to partly cloudy AIR TEMP. 60°

SAMPLES COLLECTED BY MCE

PECIAL HANDLING Samples cooled to 4ºC contained in cooler on ice

ODE OF SHIPMENT X CAR/TRUCK ____ PLANE ____ COMMER VEH. ____ OTI

OMMENTS (CALIBRATIONS, FIELD MODIFICATIONS, INSTRUMENT PROBLEMS) ____

N/A: Not Applicable

FIELD SAMPLING REPORT

ERM

498 Wando Park Blvd Suite 100
Mt. Pleasant, SC 29464
(843) 856-4270

JOB NUMBER 41284
JOB NAME Affinia-Wix
SAMPLING POINT (LOCATION) STB-6
DATE 5/17/06 TIME 0940

SAMPLING INFORMATION

SAMPLE I.D. NUMBER: STB-6 (6-8) HAZARDOUS?: ____ YES ____ NO X UNKNOWN

OIL SAMPLING DATA:

SAMPLING DATE: 5/17/06
ME: 0940

SAMPLER TYPE & MATERIAL split barrel sampler
SAMPLING DEPTH 6-8 ft.
SAMPLE DESCRIPTION Medium stiff, grayish brown, CLAY, little silt, trace sand at 4.7 ft.

'ELL SAMPLING DATA:

AMPLING DATE: ____
TIME: ____

PURGE METHOD & MATERIALS ____
VOLUME OF WATER IN WELL & SAND PACK (gallons) ____
VOLUME OF WATER PURGED (gallons) ____
PURGE DATE ____ START TIME ____ END TIME ____
SAMPLER TYPE & MATERIAL ____
SAMPLE DESCRIPTION ____

TOTAL WELL DEPTH ____ ft. DEPTH TO GROUND WATER ____ ft.

CONTAINER TYPE	CONTAINER VOLUME	PRESERVATIVE/PREPARATION	NUMBER	FILTERING	COMMENTS
glass	40ml	Sodium Bisulfate	2	–	8260B
glass	↓	–	1	–	"
glass amber	↓	methanol	1	–	"

FIELD MEASUREMENTS

PARAMETER	EQUIPMENT ID	1st READING	2nd READING	3rd READING	4th READING
pH (STO UNITS)					
TEMP (C)					
SPEC. COND (um/sm)					
TIME					
DATE					

GENERAL INFORMATION

WEATHER partly cloudy AIR TEMP. 65°

SAMPLES COLLECTED BY MCE

'ECIAL HANDLING Samples cooled to 4°C contained in cooler on ice

ODE OF SHIPMENT X CAR/TRUCK ____ PLANE ____ COMMER VEH. ____ OTI

OMMENTS (CALIBRATIONS, FIELD MODIFICATIONS, INSTRUMENT PROBLEMS) ____

A: Not Applicable

FIELD SAMPLING REPORT

ERM

498 Wando Park Blvd Suite 100
Mt. Pleasant, SC 29464
(843) 856-4270

JOB NUMBER 41284
JOB NAME Affinia-Wix
SAMPLING POINT (LOCATION) STB-7
DATE 5/17/06 TIME 1230

SAMPLING INFORMATION

SAMPLE I.D. NUMBER: STB-7(2-4) HAZARDOUS?: ____ YES ____ NO X UNKNOWN

SOIL SAMPLING DATA:

SAMPLING DATE: 5/17/06
TIME:

SAMPLER TYPE & MATERIAL split barrel sampler
SAMPLING DEPTH 2-4 ft.
SAMPLE DESCRIPTION Soft, gray, mottled with strong brown, silty CLAY, trace sand, FILL

WELL SAMPLING DATA:

SAMPLING DATE:
TIME:

PURGE METHOD & MATERIALS
VOLUME OF WATER IN WELL & SAND PACK (gallons)
VOLUME OF WATER PURGED (gallons)
PURGE DATE START TIME END TIME
SAMPLER TYPE & MATERIAL
SAMPLE DESCRIPTION

TOTAL WELL DEPTH ____ ft. DEPTH TO GROUND WATER ____ ft.

CONTAINER TYPE	CONTAINER VOLUME	PRESERVATIVE/PREPARATION	NUMBER	FILTERING	COMMENTS
glass	40ml	Sodium Bisulfate	2	–	8260B
glass	40ml	–	1	–	"
glass amber	40ml	Methanol	1	–	"

FIELD MEASUREMENTS

PARAMETER	EQUIPMENT ID	1st READING	2nd READING	3rd READING	4th READING
pH (STO UNITS)					
TEMP (C)					
SPEC. COND (um/sm)					
TIME					
DATE					

GENERAL INFORMATION

WEATHER partly cloudy AIR TEMP. 70°+

SAMPLES COLLECTED BY MCE

SPECIAL HANDLING Samples cooled to 4ºC contained in cooler on ice

MODE OF SHIPMENT X CAR/TRUCK ____ PLANE ____ COMMER VEH. ____ OTI

COMMENTS (CALIBRATIONS, FIELD MODIFICATIONS, INSTRUMENT PROBLEMS)

N/A: Not Applicable

FIELD SAMPLING REPORT

ERM

498 Wando Park Blvd Suite 100
Mt. Pleasant, SC 29464
(843) 856-4270

JOB NUMBER 41284
JOB NAME Affinia-Wix
SAMPLING POINT (LOCATION) STB-7/MW-3
DATE 5/17/06 TIME 1255

SAMPLING INFORMATION

SAMPLE I.D. NUMBER: MW-3(8-10) HAZARDOUS?: ____ YES ____ NO X UNKNOWN

SOIL SAMPLING DATA:

SAMPLING DATE: 5/17/06
TIME: 1255

SAMPLER TYPE & MATERIAL: split barrel sampler; soil
SAMPLING DEPTH: 8-10 ft.
SAMPLE DESCRIPTION: Stiff, gray, CLAY, little silt and sand, FILL

WELL SAMPLING DATA:

SAMPLING DATE: ____
TIME: ____

PURGE METHOD & MATERIALS ____
VOLUME OF WATER IN WELL & SAND PACK (gallons) ____
VOLUME OF WATER PURGED (gallons) ____
PURGE DATE ____ START TIME ____ END TIME ____
SAMPLER TYPE & MATERIAL ____
SAMPLE DESCRIPTION ____

TOTAL WELL DEPTH ____ ft. DEPTH TO GROUND WATER ____ ft.

CONTAINER TYPE	CONTAINER VOLUME	PRESERVATIVE/PREPARATION	NUMBER	FILTERING	COMMENTS
amber glass	500ml	—	1	—	TOC

FIELD MEASUREMENTS

PARAMETER	EQUIPMENT ID	1st READING	2nd READING	3rd READING	4th READING
pH (STO UNITS)					
TEMP (C)					
SPEC. COND (um/sm)					
TIME					
DATE					

GENERAL INFORMATION

WEATHER partly cloudy 70° AIR TEMP. 70°+

SAMPLES COLLECTED BY MCE

SPECIAL HANDLING Samples cooled to 4ºC contained in cooler on ice

MODE OF SHIPMENT X CAR/TRUCK ____ PLANE ____ COMMER VEH. ____ OTI

COMMENTS (CALIBRATIONS, FIELD MODIFICATIONS, INSTRUMENT PROBLEMS) ____

NA: Not Applicable

FIELD SAMPLING REPORT

ERM

498 Wando Park Blvd Suite 100
Mt. Pleasant, SC 29464
(843) 856-4270

JOB NUMBER 41284
JOB NAME Affinia-Wix
SAMPLING POINT (LOCATION) STB-8
DATE 5/17/06 TIME 1530

SAMPLING INFORMATION

SAMPLE I.D. NUMBER: STB-8(6-8) HAZARDOUS?: ____ YES ____ NO X UNKNOWN

OIL SAMPLING DATA:

SAMPLING DATE: 5/17/06
ME: 1530

SAMPLER TYPE & MATERIAL split barrel sampler
SAMPLING DEPTH 6-8 ft.
SAMPLE DESCRIPTION Soft, dark yellowish brown, silty CLAY, to grayish brown CLAY, some silt, odor.

ELL SAMPLING DATA:

AMPLING DATE: ____
TIME: ____

PURGE METHOD & MATERIALS ____
VOLUME OF WATER IN WELL & SAND PACK (gallons) ____
VOLUME OF WATER PURGED (gallons) ____
PURGE DATE ____ START TIME ____ END TIME ____
SAMPLER TYPE & MATERIAL ____
SAMPLE DESCRIPTION ____

Duplicate taken STB-Dup @ 1200

TOTAL WELL DEPTH ____ ft. DEPTH TO GROUND WATER ____ ft.

CONTAINER TYPE	CONTAINER VOLUME	PRESERVATIVE/PREPARATION	NUMBER	FILTERING	COMMENTS
glass	40ml	Sodium Bisulfate	2	–	8260B
glass	↓	–	1	–	↓
glass amber	↓	Methanol	1	–	↓

FIELD MEASUREMENTS

PARAMETER	EQUIPMENT ID	1st READING	2nd READING	3rd READING	4th READING
pH (STO UNITS)					
TEMP (C)					
SPEC. COND (um/sm)					
TIME					
DATE					

GENERAL INFORMATION

WEATHER partly cloudy AIR TEMP. 75°

SAMPLES COLLECTED BY MCE

'ECIAL HANDLING Samples cooled to 4°C contained in cooler on ice

ODE OF SHIPMENT X CAR/TRUCK ____ PLANE ____ COMMER VEH. ____ OTI

OMMENTS (CALIBRATIONS, FIELD MODIFICATIONS, INSTRUMENT PROBLEMS) ____

N/A: Not Applicable

FIELD SAMPLING REPORT

ERM

498 Wando Park Blvd Suite 100
Mt. Pleasant, SC 29464
(843) 856-4270

JOB NUMBER 41284
JOB NAME Affinia-Wix
SAMPLING POINT (LOCATION) STB-9
DATE 5/17/06 TIME 1655

SAMPLING INFORMATION

SAMPLE I.D. NUMBER: STB-9 (8-10) HAZARDOUS?: ____ YES ____ NO X UNKNOWN

OIL SAMPLING DATA:

SAMPLING DATE: 5/17/06
ME: 1655

SAMPLER TYPE & MATERIAL split barrel sampler
SAMPLING DEPTH 8-10 ft.
SAMPLE DESCRIPTION Stiff, brown, silty CLAY to light gray silty CLAY, odor.

'ELL SAMPLING DATA:

AMPLING DATE: ____
TIME: ____

PURGE METHOD & MATERIALS ____
VOLUME OF WATER IN WELL & SAND PACK (gallons) ____
VOLUME OF WATER PURGED (gallons) ____
PURGE DATE ____ START TIME ____ END TIME ____
SAMPLER TYPE & MATERIAL ____
SAMPLE DESCRIPTION ____

TOTAL WELL DEPTH ____ ft. DEPTH TO GROUND WATER ____ ft.

CONTAINER TYPE	CONTAINER VOLUME	PRESERVATIVE/PREPARATION	NUMBER	FILTERING	COMMENTS
glass	40 ml	Sodium Bisulfate	2	–	8260B
glass	↓	–	1	–	"
glass amber		Methanol	1	–	"

FIELD MEASUREMENTS

PARAMETER	EQUIPMENT ID	1st READING	2nd READING	3rd READING	4th READING
pH (STO UNITS)					
TEMP (C)					
SPEC. COND (um/sm)					
TIME					
DATE					

GENERAL INFORMATION

WEATHER partly cloudy AIR TEMP. 75°

AMPLES COLLECTED BY MCE

'ECIAL HANDLING Samples cooled to 4°C contained in cooler on ice

ODE OF SHIPMENT X CAR/TRUCK ____ PLANE ____ COMMER VEH. ____ OTI

OMMENTS (CALIBRATIONS, FIELD MODIFICATIONS, INSTRUMENT PROBLEMS) ____

A: Not Applicable

FIELD SAMPLING REPORT

ERM

498 Wando Park Blvd Suite 100
Mt. Pleasant, SC 29464
(843) 856-4270

JOB NUMBER 41284
JOB NAME Affinia-Wix
SAMPLING POINT (LOCATION) STB-10
DATE 5/18/06 TIME 0805

SAMPLING INFORMATION

SAMPLE I.D. NUMBER: STB-10(8-10) HAZARDOUS?: ____ YES ____ NO X UNKNOWN

OIL SAMPLING DATA:

SAMPLING DATE: 5/18/06
TIME: 0805

SAMPLER TYPE & MATERIAL: split barrel sampler
SAMPLING DEPTH: 8-10 ft.
SAMPLE DESCRIPTION: Medium stiff, brownish yellow, silty clay and sand, color stratification with gray.

WELL SAMPLING DATA:

SAMPLING DATE: ____
TIME: ____

PURGE METHOD & MATERIALS ____
VOLUME OF WATER IN WELL & SAND PACK (gallons) ____
VOLUME OF WATER PURGED (gallons) ____
PURGE DATE ____ START TIME ____ END TIME ____
SAMPLER TYPE & MATERIAL ____
SAMPLE DESCRIPTION ____

TOTAL WELL DEPTH ____ ft. DEPTH TO GROUND WATER ____ ft.

CONTAINER TYPE	CONTAINER VOLUME	PRESERVATIVE/PREPARATION	NUMBER	FILTERING	COMMENTS
glass	40 ml	Sodium Bisulfate	2	—	8260B
glass	↓	—	1	—	"
large amber		Methanol	1	—	"

FIELD MEASUREMENTS

PARAMETER	EQUIPMENT ID	1st READING	2nd READING	3rd READING	4th READING
pH (STO UNITS)					
TEMP (C)					
SPEC. COND (um/sm)					
TIME					
DATE					

GENERAL INFORMATION

WEATHER partly cloudy AIR TEMP. 65°

SAMPLES COLLECTED BY MCE

SPECIAL HANDLING Samples cooled to 4°C contained in cooler on ice

MODE OF SHIPMENT X CAR/TRUCK ____ PLANE ____ COMMER VEH. ____ OTI

COMMENTS (CALIBRATIONS, FIELD MODIFICATIONS, INSTRUMENT PROBLEMS) ____

N/A: Not Applicable

FIELD SAMPLING REPORT

ERM

498 Wando Park Blvd Suite 100
Mt. Pleasant, SC 29464
(843) 856-4270

JOB NUMBER 41284
JOB NAME Affinia-Wix
SAMPLING POINT (LOCATION) STB-10
DATE 5/18/06 TIME 0830

SAMPLING INFORMATION

SAMPLE I.D. NUMBER: STB-10(12-14) HAZARDOUS?: ____ YES ____ NO X UNKNOWN

SOIL SAMPLING DATA:

SAMPLING DATE: 5/18/06
TIME: 0830

SAMPLER TYPE & MATERIAL split barrel sampler
SAMPLING DEPTH 12-14 ft
SAMPLE DESCRIPTION medium stiff, sandy CLAY, little silt, stratified color, wet.

WELL SAMPLING DATA:

SAMPLING DATE: ____
TIME: ____

PURGE METHOD & MATERIALS ____
VOLUME OF WATER IN WELL & SAND PACK (gallons) ____
VOLUME OF WATER PURGED (gallons) ____
PURGE DATE ____ START TIME ____ END TIME ____
SAMPLER TYPE & MATERIAL ____
SAMPLE DESCRIPTION ____

TOTAL WELL DEPTH ____ ft. DEPTH TO GROUND WATER ____ ft.

CONTAINER TYPE	CONTAINER VOLUME	PRESERVATIVE/PREPARATION	NUMBER	FILTERING	COMMENTS
amber glass	500ml	–	1	–	TOC

FIELD MEASUREMENTS

PARAMETER	EQUIPMENT ID	1st READING	2nd READING	3rd READING	4th READING
pH (STO UNITS)					
TEMP (C)					
SPEC. COND (um/sm)					
TIME					
DATE					

GENERAL INFORMATION

WEATHER partly cloudy AIR TEMP. 65°

SAMPLES COLLECTED BY MCF

SPECIAL HANDLING Samples cooled to 4°C contained in cooler on ice

MODE OF SHIPMENT X CAR/TRUCK ____ PLANE ____ COMMER VEH. ____ OTI

COMMENTS (CALIBRATIONS, FIELD MODIFICATIONS, INSTRUMENT PROBLEMS) ____

N/A: Not Applicable

Attachment D
Laboratory Analytical Report and Chain of Custody Records

Pace Analytical®
www.pacelabs.com

Pace Analytical Services, Inc.
9800 Kincey Avenue, Suite 100
Huntersville, NC 28078
Phone: 704.875.9092
Fax: 704.875.9091

Pace Analytical Services, Inc.
2225 Riverside Drive
Asheville, NC 28804
Phone: 828.254.7176
Fax: 828.252.4618

June 01, 2006

Mr. Mark Easterbrook
ERM-Southeast
498 Wando Park Blvd
Suite 100
Mt Pleasant, SC 29464

RE: Lab Project Number: 92119722
Client Project ID: Affinia-Wix/41284

Dear Mr. Easterbrook:

Enclosed are the analytical results for sample(s) received by the laboratory on May 19, 2006. Results reported herein conform to the most current NELAC standards, where applicable, unless otherwise narrated in the body of the report.

Inorganic Wet Chemistry and Metals Analyses were performed at our Pace Asheville laboratory and Organic testing was performed at our Pace Charlotte laboratory unless otherwise footnoted.

If you have any questions concerning this report please feel free to contact me.

Sincerely,

Annette Scott

Annette Scott
Annette.Scott@pacelabs.com
Project Manager

Enclosures

Pace Analytical®
www.pacelabs.com

Pace Analytical Services, Inc.
9800 Kincey Avenue, Suite 100
Huntersville, NC 28078
Phone: 704.875.9092
Fax: 704.875.9091

Pace Analytical Services, Inc.
2225 Riverside Drive
Asheville, NC 28804
Phone: 828.254.7176
Fax: 828.252.4618

Lab Project Number: 92119722
Client Project ID: Affinia-Wix/41284

Solid results are reported on a dry weight basis

Lab Sample No: 927001974 | Project Sample Number: 92119722-003 | Date Collected: 05/17/06 12:30
Client Sample ID: STB-7(2-4) | Matrix: Soil | Date Received: 05/19/06 09:30

Parameters	Results	Units	Report Limit	Analyzed	By	CAS No.	Qual	RegLmt
Wet Chemistry								
Percent Moisture	Method: % Moisture							
Percent Moisture	15.1	%		05/19/06 16:00	TNM			
GC/MS Volatiles								
GC/MS VOCs 5035/8260 low level	Method: EPA 8260							
Acetone	ND	ug/kg	88.	05/22/06 17:58	MSF	67-64-1		
Benzene	ND	ug/kg	4.4	05/22/06 17:58	MSF	71-43-2		
Bromobenzene	ND	ug/kg	4.4	05/22/06 17:58	MSF	108-86-1		
Bromochloromethane	ND	ug/kg	4.4	05/22/06 17:58	MSF	74-97-5		
Bromodichloromethane	ND	ug/kg	4.4	05/22/06 17:58	MSF	75-27-4		
Bromoform	ND	ug/kg	4.4	05/22/06 17:58	MSF	75-25-2		
Bromomethane	ND	ug/kg	8.8	05/22/06 17:58	MSF	74-83-9		
2-Butanone (MEK)	ND	ug/kg	88.	05/22/06 17:58	MSF	78-93-3		
n-Butylbenzene	ND	ug/kg	4.4	05/22/06 17:58	MSF	104-51-8		
sec-Butylbenzene	ND	ug/kg	4.4	05/22/06 17:58	MSF	135-98-8		
tert-Butylbenzene	ND	ug/kg	4.4	05/22/06 17:58	MSF	98-06-6		
Carbon tetrachloride	ND	ug/kg	4.4	05/22/06 17:58	MSF	56-23-5		
Chlorobenzene	ND	ug/kg	4.4	05/22/06 17:58	MSF	108-90-7		
Chloroethane	ND	ug/kg	8.8	05/22/06 17:58	MSF	75-00-3		
Chloroform	ND	ug/kg	4.4	05/22/06 17:58	MSF	67-66-3		
Chloromethane	ND	ug/kg	8.8	05/22/06 17:58	MSF	74-87-3		
2-Chlorotoluene	ND	ug/kg	4.4	05/22/06 17:58	MSF	95-49-8		
4-Chlorotoluene	ND	ug/kg	4.4	05/22/06 17:58	MSF	106-43-4		
1,2-Dibromo-3-chloropropane	ND	ug/kg	4.4	05/22/06 17:58	MSF	96-12-8		
Dibromochloromethane	ND	ug/kg	4.4	05/22/06 17:58	MSF	124-48-1		
1,2-Dibromoethane (EDB)	ND	ug/kg	4.4	05/22/06 17:58	MSF	106-93-4		
Dibromomethane	ND	ug/kg	4.4	05/22/06 17:58	MSF	74-95-3		
1,2-Dichlorobenzene	ND	ug/kg	4.4	05/22/06 17:58	MSF	95-50-1		
1,3-Dichlorobenzene	ND	ug/kg	4.4	05/22/06 17:58	MSF	541-73-1		
1,4-Dichlorobenzene	ND	ug/kg	4.4	05/22/06 17:58	MSF	106-46-7		
Dichlorodifluoromethane	ND	ug/kg	8.8	05/22/06 17:58	MSF	75-71-8		
1,1-Dichloroethane	ND	ug/kg	4.4	05/22/06 17:58	MSF	75-34-3		
1,2-Dichloroethane	ND	ug/kg	4.4	05/22/06 17:58	MSF	107-06-2		
1,1-Dichloroethene	ND	ug/kg	4.4	05/22/06 17:58	MSF	75-35-4		
cis-1,2-Dichloroethene	ND	ug/kg	4.4	05/22/06 17:58	MSF	156-59-2		
trans-1,2-Dichloroethene	ND	ug/kg	4.4	05/22/06 17:58	MSF	156-60-5		
1,2-Dichloropropane	ND	ug/kg	4.4	05/22/06 17:58	MSF	78-87-5		

Pace Analytical®
www.pacelabs.com

Pace Analytical Services, Inc.
9800 Kincey Avenue, Suite 100
Huntersville, NC 28078
Phone: 704.875.9092
Fax: 704.875.9091

Pace Analytical Services, Inc.
2225 Riverside Drive
Asheville, NC 28804
Phone: 828.254.7176
Fax: 828.252.4618

Lab Project Number: 92119722
Client Project ID: Affinia-Wix/41284

Lab Sample No: 927001974 | Project Sample Number: 92119722-003 | Date Collected: 05/17/06 12:30
Client Sample ID: STB-7(2-4) | Matrix: Soil | Date Received: 05/19/06 09:30

Parameters	Results	Units	Report Limit	Analyzed	By	CAS No.	Qual	RegLmt
1,3-Dichloropropane	ND	ug/kg	4.4	05/22/06 17:58	MSF	142-28-9		
2,2-Dichloropropane	ND	ug/kg	4.4	05/22/06 17:58	MSF	594-20-7		
1,1-Dichloropropene	ND	ug/kg	4.4	05/22/06 17:58	MSF	563-58-6		
cis-1,3-Dichloropropene	ND	ug/kg	4.4	05/22/06 17:58	MSF	10061-01-5		
trans-1,3-Dichloropropene	ND	ug/kg	4.4	05/22/06 17:58	MSF	10061-02-6		
Diisopropyl ether	ND	ug/kg	4.4	05/22/06 17:58	MSF	108-20-3		
Ethylbenzene	8.5	ug/kg	4.4	05/22/06 17:58	MSF	100-41-4		
Hexachloro-1,3-butadiene	ND	ug/kg	4.4	05/22/06 17:58	MSF	87-68-3		
2-Hexanone	ND	ug/kg	44.	05/22/06 17:58	MSF	591-78-6		
Isopropylbenzene (Cumene)	9.4	ug/kg	4.4	05/22/06 17:58	MSF	98-82-8		
p-Isopropyltoluene	5.4	ug/kg	4.4	05/22/06 17:58	MSF	99-87-6		
Methylene chloride	ND	ug/kg	4.4	05/22/06 17:58	MSF	75-09-2		
4-Methyl-2-pentanone (MIBK)	ND	ug/kg	44.	05/22/06 17:58	MSF	108-10-1		
Methyl-tert-butyl ether	ND	ug/kg	4.4	05/22/06 17:58	MSF	1634-04-4		
Naphthalene	ND	ug/kg	4.4	05/22/06 17:58	MSF	91-20-3		
n-Propylbenzene	22.	ug/kg	4.4	05/22/06 17:58	MSF	103-65-1		
Styrene	ND	ug/kg	4.4	05/22/06 17:58	MSF	100-42-5		
1,1,1,2-Tetrachloroethane	ND	ug/kg	4.4	05/22/06 17:58	MSF	630-20-6		
1,1,2,2-Tetrachloroethane	ND	ug/kg	4.4	05/22/06 17:58	MSF	79-34-5		
Tetrachloroethene	ND	ug/kg	4.4	05/22/06 17:58	MSF	127-18-4		
Toluene	140	ug/kg	4.4	05/22/06 17:58	MSF	108-88-3	1	
1,2,3-Trichlorobenzene	ND	ug/kg	4.4	05/22/06 17:58	MSF	87-61-6		
1,2,4-Trichlorobenzene	ND	ug/kg	4.4	05/22/06 17:58	MSF	120-82-1		
1,1,1-Trichloroethane	ND	ug/kg	4.4	05/22/06 17:58	MSF	71-55-6		
1,1,2-Trichloroethane	ND	ug/kg	4.4	05/22/06 17:58	MSF	79-00-5		
Trichloroethene	ND	ug/kg	4.4	05/22/06 17:58	MSF	79-01-6		
Trichlorofluoromethane	ND	ug/kg	4.4	05/22/06 17:58	MSF	75-69-4		
1,2,3-Trichloropropane	ND	ug/kg	4.4	05/22/06 17:58	MSF	96-18-4		
1,2,4-Trimethylbenzene	ND	ug/kg	4.4	05/22/06 17:58	MSF	95-63-6		
1,3,5-Trimethylbenzene	28.	ug/kg	4.4	05/22/06 17:58	MSF	108-67-8		
Vinyl acetate	ND	ug/kg	44.	05/22/06 17:58	MSF	108-05-4		
Vinyl chloride	ND	ug/kg	8.8	05/22/06 17:58	MSF	75-01-4		
Xylene (Total)	11.	ug/kg	4.4	05/22/06 17:58	MSF	1330-20-7		
m&p-Xylene	9.4	ug/kg	8.8	05/22/06 17:58	MSF			
o-Xylene	ND	ug/kg	4.4	05/22/06 17:58	MSF	95-47-6		
Toluene-d8 (S)	98	%		05/22/06 17:58	MSF	2037-26-5		
4-Bromofluorobenzene (S)	101	%		05/22/06 17:58	MSF	460-00-4		
Dibromofluoromethane (S)	95	%		05/22/06 17:58	MSF	1868-53-7		
1,2-Dichloroethane-d4 (S)	96	%		05/22/06 17:58	MSF	17060-07-0		

Pace Analytical®
www.pacelabs.com

Pace Analytical Services, Inc.
9800 Kincey Avenue, Suite 100
Huntersville, NC 28078
Phone: 704.875.9092
Fax: 704.875.9091

Pace Analytical Services, Inc.
2225 Riverside Drive
Asheville, NC 28804
Phone: 828.254.7176
Fax: 828.252.4618

Lab Project Number: 92119722
Client Project ID: Affinia-Wix/41284

Lab Sample No: 927001982 | Project Sample Number: 92119722-004 | Date Collected: 05/17/06 09:40
Client Sample ID: STB-6(6-8) | Matrix: Soil | Date Received: 05/19/06 09:30

Parameters	Results	Units	Report Limit	Analyzed	By	CAS No.	Qual	RegLmt
Wet Chemistry								
Percent Moisture	Method: % Moisture							
Percent Moisture	12.5	%		05/19/06 16:01	TNM			
GC/MS Volatiles								
GC/MS VOCs 5035/8260 low level	Method: EPA 8260							
Acetone	ND	ug/kg	80.	05/22/06 18:13	MSF	67-64-1		
Benzene	6.9	ug/kg	4.0	05/22/06 18:13	MSF	71-43-2		
Bromobenzene	ND	ug/kg	4.0	05/22/06 18:13	MSF	108-86-1		
Bromochloromethane	ND	ug/kg	4.0	05/22/06 18:13	MSF	74-97-5		
Bromodichloromethane	ND	ug/kg	4.0	05/22/06 18:13	MSF	75-27-4		
Bromoform	ND	ug/kg	4.0	05/22/06 18:13	MSF	75-25-2		
Bromomethane	ND	ug/kg	8.0	05/22/06 18:13	MSF	74-83-9		
2-Butanone (MEK)	ND	ug/kg	80.	05/22/06 18:13	MSF	78-93-3		
n-Butylbenzene	ND	ug/kg	4.0	05/22/06 18:13	MSF	104-51-8		
sec-Butylbenzene	ND	ug/kg	4.0	05/22/06 18:13	MSF	135-98-8		
tert-Butylbenzene	ND	ug/kg	4.0	05/22/06 18:13	MSF	98-06-6		
Carbon tetrachloride	ND	ug/kg	4.0	05/22/06 18:13	MSF	56-23-5		
Chlorobenzene	ND	ug/kg	4.0	05/22/06 18:13	MSF	108-90-7		
Chloroethane	ND	ug/kg	8.0	05/22/06 18:13	MSF	75-00-3		
Chloroform	ND	ug/kg	4.0	05/22/06 18:13	MSF	67-66-3		
Chloromethane	ND	ug/kg	8.0	05/22/06 18:13	MSF	74-87-3		
2-Chlorotoluene	ND	ug/kg	4.0	05/22/06 18:13	MSF	95-49-8		
4-Chlorotoluene	ND	ug/kg	4.0	05/22/06 18:13	MSF	106-43-4		
1,2-Dibromo-3-chloropropane	ND	ug/kg	4.0	05/22/06 18:13	MSF	96-12-8		
Dibromochloromethane	ND	ug/kg	4.0	05/22/06 18:13	MSF	124-48-1		
1,2-Dibromoethane (EDB)	ND	ug/kg	4.0	05/22/06 18:13	MSF	106-93-4		
Dibromomethane	ND	ug/kg	4.0	05/22/06 18:13	MSF	74-95-3		
1,2-Dichlorobenzene	ND	ug/kg	4.0	05/22/06 18:13	MSF	95-50-1		
1,3-Dichlorobenzene	ND	ug/kg	4.0	05/22/06 18:13	MSF	541-73-1		
1,4-Dichlorobenzene	ND	ug/kg	4.0	05/22/06 18:13	MSF	106-46-7		
Dichlorodifluoromethane	ND	ug/kg	8.0	05/22/06 18:13	MSF	75-71-8		
1,1-Dichloroethane	ND	ug/kg	4.0	05/22/06 18:13	MSF	75-34-3		
1,2-Dichloroethane	ND	ug/kg	4.0	05/22/06 18:13	MSF	107-06-2		
1,1-Dichloroethene	ND	ug/kg	4.0	05/22/06 18:13	MSF	75-35-4		
cis-1,2-Dichloroethene	ND	ug/kg	4.0	05/22/06 18:13	MSF	156-59-2		
trans-1,2-Dichloroethene	ND	ug/kg	4.0	05/22/06 18:13	MSF	156-60-5		
1,2-Dichloropropane	ND	ug/kg	4.0	05/22/06 18:13	MSF	78-87-5		
1,3-Dichloropropane	ND	ug/kg	4.0	05/22/06 18:13	MSF	142-28-9		

Pace Analytical®
www.pacelabs.com

Pace Analytical Services, Inc.
9800 Kincey Avenue, Suite 100
Huntersville, NC 28078
Phone: 704.875.9092
Fax: 704.875.9091

Pace Analytical Services, Inc.
2225 Riverside Drive
Asheville, NC 28804
Phone: 828.254.7176
Fax: 828.252.4618

Lab Project Number: 92119722
Client Project ID: Affinia-Wix/41284

Lab Sample No: 927001982 Project Sample Number: 92119722-004 Date Collected: 05/17/06 09:40
Client Sample ID: STB-6(6-8) Matrix: Soil Date Received: 05/19/06 09:30

Parameters	Results	Units	Report Limit	Analyzed	By	CAS No.	Qual	RegLmt
2,2-Dichloropropane	ND	ug/kg	4.0	05/22/06 18:13	MSF	594-20-7		
1,1-Dichloropropene	ND	ug/kg	4.0	05/22/06 18:13	MSF	563-58-6		
cis-1,3-Dichloropropene	ND	ug/kg	4.0	05/22/06 18:13	MSF	10061-01-5		
trans-1,3-Dichloropropene	ND	ug/kg	4.0	05/22/06 18:13	MSF	10061-02-6		
Diisopropyl ether	ND	ug/kg	4.0	05/22/06 18:13	MSF	108-20-3		
Ethylbenzene	18.	ug/kg	4.0	05/22/06 18:13	MSF	100-41-4		
Hexachloro-1,3-butadiene	ND	ug/kg	4.0	05/22/06 18:13	MSF	87-68-3		
2-Hexanone	ND	ug/kg	40.	05/22/06 18:13	MSF	591-78-6		
Isopropylbenzene (Cumene)	ND	ug/kg	4.0	05/22/06 18:13	MSF	98-82-8		
p-Isopropyltoluene	11.	ug/kg	4.0	05/22/06 18:13	MSF	99-87-6		
Methylene chloride	ND	ug/kg	4.0	05/22/06 18:13	MSF	75-09-2		
4-Methyl-2-pentanone (MIBK)	ND	ug/kg	40.	05/22/06 18:13	MSF	108-10-1		
Methyl-tert-butyl ether	ND	ug/kg	4.0	05/22/06 18:13	MSF	1634-04-4		
Naphthalene	ND	ug/kg	4.0	05/22/06 18:13	MSF	91-20-3		
n-Propylbenzene	ND	ug/kg	4.0	05/22/06 18:13	MSF	103-65-1		
Styrene	ND	ug/kg	4.0	05/22/06 18:13	MSF	100-42-5		
1,1,1,2-Tetrachloroethane	ND	ug/kg	4.0	05/22/06 18:13	MSF	630-20-6		
1,1,2,2-Tetrachloroethane	ND	ug/kg	4.0	05/22/06 18:13	MSF	79-34-5		
Tetrachloroethene	ND	ug/kg	4.0	05/22/06 18:13	MSF	127-18-4		
Toluene	25000	ug/kg	2000	05/22/06 18:13	MSF	108-88-3		
1,2,3-Trichlorobenzene	ND	ug/kg	4.0	05/22/06 18:13	MSF	87-61-6		
1,2,4-Trichlorobenzene	ND	ug/kg	4.0	05/22/06 18:13	MSF	120-82-1		
1,1,1-Trichloroethane	ND	ug/kg	4.0	05/22/06 18:13	MSF	71-55-6		
1,1,2-Trichloroethane	ND	ug/kg	4.0	05/22/06 18:13	MSF	79-00-5		
Trichloroethene	ND	ug/kg	4.0	05/22/06 18:13	MSF	79-01-6		
Trichlorofluoromethane	ND	ug/kg	4.0	05/22/06 18:13	MSF	75-69-4		
1,2,3-Trichloropropane	ND	ug/kg	4.0	05/22/06 18:13	MSF	96-18-4		
1,2,4-Trimethylbenzene	ND	ug/kg	4.0	05/22/06 18:13	MSF	95-63-6		
1,3,5-Trimethylbenzene	ND	ug/kg	4.0	05/22/06 18:13	MSF	108-67-8		
Vinyl acetate	ND	ug/kg	40.	05/22/06 18:13	MSF	108-05-4		
Vinyl chloride	ND	ug/kg	8.0	05/22/06 18:13	MSF	75-01-4		
Xylene (Total)	17.	ug/kg	4.0	05/22/06 18:13	MSF	1330-20-7		
m&p-Xylene	14.	ug/kg	8.0	05/22/06 18:13	MSF			
o-Xylene	ND	ug/kg	4.0	05/22/06 18:13	MSF	95-47-6		
Toluene-d8 (S)	69	%		05/22/06 18:13	MSF	2037-26-5	2	
4-Bromofluorobenzene (S)	97	%		05/22/06 18:13	MSF	460-00-4		
Dibromofluoromethane (S)	93	%		05/22/06 18:13	MSF	1868-53-7		
1,2-Dichloroethane-d4 (S)	85	%		05/22/06 18:13	MSF	17060-07-0		

Pace Analytical®
www.pacelabs.com

Pace Analytical Services, Inc.
9800 Kincey Avenue, Suite 100
Huntersville, NC 28078
Phone: 704.875.9092
Fax: 704.875.9091

Pace Analytical Services, Inc.
2225 Riverside Drive
Asheville, NC 28804
Phone: 828.254.7176
Fax: 828.252.4618

Lab Project Number: 92119722
Client Project ID: Affinia-Wix/41284

Lab Sample No: 927001990 | Project Sample Number: 92119722-005 | Date Collected: 05/17/06 07:15
Client Sample ID: STB-5(4-6) | Matrix: Soil | Date Received: 05/19/06 09:30

Parameters	Results	Units	Report Limit	Analyzed	By	CAS No.	Qual	RegLmt
Wet Chemistry								
Percent Moisture	Method: % Moisture							
Percent Moisture	14.3	%		05/19/06 16:01	TNM			
GC/MS Volatiles								
GC/MS VOCs 5035/8260 low level	Method: EPA 8260							
Acetone	220	ug/kg	87.	05/22/06 18:29	MSF	67-64-1		
Benzene	15.	ug/kg	4.4	05/22/06 18:29	MSF	71-43-2		
Bromobenzene	ND	ug/kg	4.4	05/22/06 18:29	MSF	108-86-1		
Bromochloromethane	ND	ug/kg	4.4	05/22/06 18:29	MSF	74-97-5		
Bromodichloromethane	ND	ug/kg	4.4	05/22/06 18:29	MSF	75-27-4		
Bromoform	ND	ug/kg	4.4	05/22/06 18:29	MSF	75-25-2		
Bromomethane	ND	ug/kg	8.7	05/22/06 18:29	MSF	74-83-9		
2-Butanone (MEK)	ND	ug/kg	87.	05/22/06 18:29	MSF	78-93-3		
n-Butylbenzene	ND	ug/kg	4.4	05/22/06 18:29	MSF	104-51-8		
sec-Butylbenzene	ND	ug/kg	4.4	05/22/06 18:29	MSF	135-98-8		
tert-Butylbenzene	ND	ug/kg	4.4	05/22/06 18:29	MSF	98-06-6		
Carbon tetrachloride	ND	ug/kg	4.4	05/22/06 18:29	MSF	56-23-5		
Chlorobenzene	ND	ug/kg	4.4	05/22/06 18:29	MSF	108-90-7		
Chloroethane	ND	ug/kg	8.7	05/22/06 18:29	MSF	75-00-3		
Chloroform	ND	ug/kg	4.4	05/22/06 18:29	MSF	67-66-3		
Chloromethane	ND	ug/kg	8.7	05/22/06 18:29	MSF	74-87-3		
2-Chlorotoluene	ND	ug/kg	4.4	05/22/06 18:29	MSF	95-49-8		
4-Chlorotoluene	ND	ug/kg	4.4	05/22/06 18:29	MSF	106-43-4		
1,2-Dibromo-3-chloropropane	ND	ug/kg	4.4	05/22/06 18:29	MSF	96-12-8		
Dibromochloromethane	ND	ug/kg	4.4	05/22/06 18:29	MSF	124-48-1		
1,2-Dibromoethane (EDB)	ND	ug/kg	4.4	05/22/06 18:29	MSF	106-93-4		
Dibromomethane	ND	ug/kg	4.4	05/22/06 18:29	MSF	74-95-3		
1,2-Dichlorobenzene	ND	ug/kg	4.4	05/22/06 18:29	MSF	95-50-1		
1,3-Dichlorobenzene	ND	ug/kg	4.4	05/22/06 18:29	MSF	541-73-1		
1,4-Dichlorobenzene	ND	ug/kg	4.4	05/22/06 18:29	MSF	106-46-7		
Dichlorodifluoromethane	ND	ug/kg	8.7	05/22/06 18:29	MSF	75-71-8		
1,1-Dichloroethane	ND	ug/kg	4.4	05/22/06 18:29	MSF	75-34-3		
1,2-Dichloroethane	ND	ug/kg	4.4	05/22/06 18:29	MSF	107-06-2		
1,1-Dichloroethene	ND	ug/kg	4.4	05/22/06 18:29	MSF	75-35-4		
cis-1,2-Dichloroethene	ND	ug/kg	4.4	05/22/06 18:29	MSF	156-59-2		
trans-1,2-Dichloroethene	ND	ug/kg	4.4	05/22/06 18:29	MSF	156-60-5		
1,2-Dichloropropane	ND	ug/kg	4.4	05/22/06 18:29	MSF	78-87-5		
1,3-Dichloropropane	ND	ug/kg	4.4	05/22/06 18:29	MSF	142-28-9		

Pace Analytical®
www.pacelabs.com

Pace Analytical Services, Inc.
9800 Kincey Avenue, Suite 100
Huntersville, NC 28078
Phone: 704.875.9092
Fax: 704.875.9091

Pace Analytical Services, Inc.
2225 Riverside Drive
Asheville, NC 28804
Phone: 828.254.7176
Fax: 828.252.4618

Lab Project Number: 92119722
Client Project ID: Affinia-Wix/41284

Lab Sample No: 927001990 | Project Sample Number: 92119722-005 | Date Collected: 05/17/06 07:15
Client Sample ID: STB-5(4-6) | Matrix: Soil | Date Received: 05/19/06 09:30

Parameters	Results	Units	Report Limit	Analyzed	By	CAS No.	Qual	RegLmt
2,2-Dichloropropane	ND	ug/kg	4.4	05/22/06 18:29	MSF	594-20-7		
1,1-Dichloropropene	ND	ug/kg	4.4	05/22/06 18:29	MSF	563-58-6		
cis-1,3-Dichloropropene	ND	ug/kg	4.4	05/22/06 18:29	MSF	10061-01-5		
trans-1,3-Dichloropropene	ND	ug/kg	4.4	05/22/06 18:29	MSF	10061-02-6		
Diisopropyl ether	ND	ug/kg	4.4	05/22/06 18:29	MSF	108-20-3		
Ethylbenzene	38.	ug/kg	4.4	05/22/06 18:29	MSF	100-41-4	3	
Hexachloro-1,3-butadiene	ND	ug/kg	4.4	05/22/06 18:29	MSF	87-68-3		
2-Hexanone	ND	ug/kg	44.	05/22/06 18:29	MSF	591-78-6	3	
Isopropylbenzene (Cumene)	5.0	ug/kg	4.4	05/22/06 18:29	MSF	98-82-8	3	
p-Isopropyltoluene	140	ug/kg	4.4	05/22/06 18:29	MSF	99-87-6	3	
Methylene chloride	ND	ug/kg	4.4	05/22/06 18:29	MSF	75-09-2		
4-Methyl-2-pentanone (MIBK)	ND	ug/kg	44.	05/22/06 18:29	MSF	108-10-1		
Methyl-tert-butyl ether	ND	ug/kg	4.4	05/22/06 18:29	MSF	1634-04-4		
Naphthalene	84.	ug/kg	4.4	05/22/06 18:29	MSF	91-20-3	3	
n-Propylbenzene	55.	ug/kg	4.4	05/22/06 18:29	MSF	103-65-1	3	
Styrene	ND	ug/kg	4.4	05/22/06 18:29	MSF	100-42-5		
1,1,1,2-Tetrachloroethane	ND	ug/kg	4.4	05/22/06 18:29	MSF	630-20-6		
1,1,2,2-Tetrachloroethane	ND	ug/kg	4.4	05/22/06 18:29	MSF	79-34-5		
Tetrachloroethene	ND	ug/kg	4.4	05/22/06 18:29	MSF	127-18-4		
Toluene	370000	ug/kg	11000	05/22/06 18:29	MSF	108-88-3		
1,2,3-Trichlorobenzene	ND	ug/kg	4.4	05/22/06 18:29	MSF	87-61-6		
1,2,4-Trichlorobenzene	ND	ug/kg	4.4	05/22/06 18:29	MSF	120-82-1		
1,1,1-Trichloroethane	ND	ug/kg	4.4	05/22/06 18:29	MSF	71-55-6		
1,1,2-Trichloroethane	ND	ug/kg	4.4	05/22/06 18:29	MSF	79-00-5		
Trichloroethene	ND	ug/kg	4.4	05/22/06 18:29	MSF	79-01-6		
Trichlorofluoromethane	ND	ug/kg	4.4	05/22/06 18:29	MSF	75-69-4		
1,2,3-Trichloropropane	ND	ug/kg	4.4	05/22/06 18:29	MSF	96-18-4		
1,2,4-Trimethylbenzene	130	ug/kg	4.4	05/22/06 18:29	MSF	95-63-6	3	
1,3,5-Trimethylbenzene	42.	ug/kg	4.4	05/22/06 18:29	MSF	108-67-8	3	
Vinyl acetate	ND	ug/kg	44.	05/22/06 18:29	MSF	108-05-4		
Vinyl chloride	ND	ug/kg	8.7	05/22/06 18:29	MSF	75-01-4		
Xylene (Total)	84.	ug/kg	4.4	05/22/06 18:29	MSF	1330-20-7		
m&p-Xylene	55.	ug/kg	8.7	05/22/06 18:29	MSF		3	
o-Xylene	28.	ug/kg	4.4	05/22/06 18:29	MSF	95-47-6	3	
Toluene-d8 (S)	28	%		05/22/06 18:29	MSF	2037-26-5	2	
4-Bromofluorobenzene (S)	68	%		05/22/06 18:29	MSF	460-00-4	2	
Dibromofluoromethane (S)	108	%		05/22/06 18:29	MSF	1868-53-7		
1,2-Dichloroethane-d4 (S)	111	%		05/22/06 18:29	MSF	17060-07-0		

Pace Analytical®
www.pacelabs.com

Pace Analytical Services, Inc.
9800 Kincey Avenue, Suite 100
Huntersville, NC 28078
Phone: 704.875.9092
Fax: 704.875.9091

Pace Analytical Services, Inc.
2225 Riverside Drive
Asheville, NC 28804
Phone: 828.254.7176
Fax: 828.252.4618

Lab Project Number: 92119722
Client Project ID: Affinia-Wix/41284

Lab Sample No: 927002006 Project Sample Number: 92119722-006 Date Collected: 05/18/06 08:05
Client Sample ID: STB-10(8-10) Matrix: Soil Date Received: 05/19/06 09:30

Parameters	Results	Units	Report Limit	Analyzed	By	CAS No.	Qual	RegLmt
Wet Chemistry								
Percent Moisture	Method: % Moisture							
Percent Moisture	13.8	%		05/19/06 16:02	TNM			
GC/MS Volatiles								
GC/MS VOCs 5035/8260 low level	Method: EPA 8260							
Acetone	ND	ug/kg	87.	05/31/06 13:38	DLK	67-64-1		
Benzene	ND	ug/kg	4.3	05/31/06 13:38	DLK	71-43-2		
Bromobenzene	ND	ug/kg	4.3	05/31/06 13:38	DLK	108-86-1		
Bromochloromethane	ND	ug/kg	4.3	05/31/06 13:38	DLK	74-97-5		
Bromodichloromethane	ND	ug/kg	4.3	05/31/06 13:38	DLK	75-27-4		
Bromoform	ND	ug/kg	4.3	05/31/06 13:38	DLK	75-25-2		
Bromomethane	ND	ug/kg	8.7	05/31/06 13:38	DLK	74-83-9		
2-Butanone (MEK)	ND	ug/kg	87.	05/31/06 13:38	DLK	78-93-3		
n-Butylbenzene	ND	ug/kg	4.3	05/31/06 13:38	DLK	104-51-8		
sec-Butylbenzene	ND	ug/kg	4.3	05/31/06 13:38	DLK	135-98-8		
tert-Butylbenzene	ND	ug/kg	4.3	05/31/06 13:38	DLK	98-06-6		
Carbon tetrachloride	ND	ug/kg	4.3	05/31/06 13:38	DLK	56-23-5		
Chlorobenzene	ND	ug/kg	4.3	05/31/06 13:38	DLK	108-90-7		
Chloroethane	ND	ug/kg	8.7	05/31/06 13:38	DLK	75-00-3		
Chloroform	ND	ug/kg	4.3	05/31/06 13:38	DLK	67-66-3		
Chloromethane	ND	ug/kg	8.7	05/31/06 13:38	DLK	74-87-3		
2-Chlorotoluene	ND	ug/kg	4.3	05/31/06 13:38	DLK	95-49-8		
4-Chlorotoluene	ND	ug/kg	4.3	05/31/06 13:38	DLK	106-43-4		
1,2-Dibromo-3-chloropropane	ND	ug/kg	4.3	05/31/06 13:38	DLK	96-12-8		
Dibromochloromethane	ND	ug/kg	4.3	05/31/06 13:38	DLK	124-48-1		
1,2-Dibromoethane (EDB)	ND	ug/kg	4.3	05/31/06 13:38	DLK	106-93-4		
Dibromomethane	ND	ug/kg	4.3	05/31/06 13:38	DLK	74-95-3		
1,2-Dichlorobenzene	ND	ug/kg	4.3	05/31/06 13:38	DLK	95-50-1		
1,3-Dichlorobenzene	ND	ug/kg	4.3	05/31/06 13:38	DLK	541-73-1		
1,4-Dichlorobenzene	ND	ug/kg	4.3	05/31/06 13:38	DLK	106-46-7		
Dichlorodifluoromethane	ND	ug/kg	8.7	05/31/06 13:38	DLK	75-71-8		
1,1-Dichloroethane	ND	ug/kg	4.3	05/31/06 13:38	DLK	75-34-3		
1,2-Dichloroethane	ND	ug/kg	4.3	05/31/06 13:38	DLK	107-06-2		
1,1-Dichloroethene	ND	ug/kg	4.3	05/31/06 13:38	DLK	75-35-4		
cis-1,2-Dichloroethene	ND	ug/kg	4.3	05/31/06 13:38	DLK	156-59-2		
trans-1,2-Dichloroethene	ND	ug/kg	4.3	05/31/06 13:38	DLK	156-60-5		
1,2-Dichloropropane	ND	ug/kg	4.3	05/31/06 13:38	DLK	78-87-5		
1,3-Dichloropropane	ND	ug/kg	4.3	05/31/06 13:38	DLK	142-28-9		

Pace Analytical®
www.pacelabs.com

Pace Analytical Services, Inc.
9800 Kincey Avenue, Suite 100
Huntersville, NC 28078
Phone: 704.875.9092
Fax: 704.875.9091

Pace Analytical Services, Inc.
2225 Riverside Drive
Asheville, NC 28804
Phone: 828.254.7176
Fax: 828.252.4618

Lab Project Number: 92119722
Client Project ID: Affinia-Wix/41284

Lab Sample No: 927002006 Project Sample Number: 92119722-006 Date Collected: 05/18/06 08:05
Client Sample ID: STB-10(8-10) Matrix: Soil Date Received: 05/19/06 09:30

Parameters	Results	Units	Report Limit	Analyzed	By	CAS No.	Qual	RegLmt
2,2-Dichloropropane	ND	ug/kg	4.3	05/31/06 13:38	DLK	594-20-7		
1,1-Dichloropropene	ND	ug/kg	4.3	05/31/06 13:38	DLK	563-58-6		
cis-1,3-Dichloropropene	ND	ug/kg	4.3	05/31/06 13:38	DLK	10061-01-5		
trans-1,3-Dichloropropene	ND	ug/kg	4.3	05/31/06 13:38	DLK	10061-02-6		
Diisopropyl ether	ND	ug/kg	4.3	05/31/06 13:38	DLK	108-20-3		
Ethylbenzene	ND	ug/kg	4.3	05/31/06 13:38	DLK	100-41-4		
Hexachloro-1,3-butadiene	ND	ug/kg	4.3	05/31/06 13:38	DLK	87-68-3		
2-Hexanone	ND	ug/kg	43.	05/31/06 13:38	DLK	591-78-6		
Isopropylbenzene (Cumene)	ND	ug/kg	4.3	05/31/06 13:38	DLK	98-82-8		
p-Isopropyltoluene	ND	ug/kg	4.3	05/31/06 13:38	DLK	99-87-6		
Methylene chloride	ND	ug/kg	4.3	05/31/06 13:38	DLK	75-09-2		
4-Methyl-2-pentanone (MIBK)	ND	ug/kg	43.	05/31/06 13:38	DLK	108-10-1		
Methyl-tert-butyl ether	ND	ug/kg	4.3	05/31/06 13:38	DLK	1634-04-4		
Naphthalene	ND	ug/kg	4.3	05/31/06 13:38	DLK	91-20-3		
n-Propylbenzene	ND	ug/kg	4.3	05/31/06 13:38	DLK	103-65-1		
Styrene	ND	ug/kg	4.3	05/31/06 13:38	DLK	100-42-5		
1,1,1,2-Tetrachloroethane	ND	ug/kg	4.3	05/31/06 13:38	DLK	630-20-6		
1,1,2,2-Tetrachloroethane	ND	ug/kg	4.3	05/31/06 13:38	DLK	79-34-5		
Tetrachloroethene	ND	ug/kg	4.3	05/31/06 13:38	DLK	127-18-4		
Toluene	ND	ug/kg	4.3	05/31/06 13:38	DLK	108-88-3		
1,2,3-Trichlorobenzene	ND	ug/kg	4.3	05/31/06 13:38	DLK	87-61-6		
1,2,4-Trichlorobenzene	ND	ug/kg	4.3	05/31/06 13:38	DLK	120-82-1		
1,1,1-Trichloroethane	ND	ug/kg	4.3	05/31/06 13:38	DLK	71-55-6		
1,1,2-Trichloroethane	ND	ug/kg	4.3	05/31/06 13:38	DLK	79-00-5		
Trichloroethene	ND	ug/kg	4.3	05/31/06 13:38	DLK	79-01-6		
Trichlorofluoromethane	ND	ug/kg	4.3	05/31/06 13:38	DLK	75-69-4		
1,2,3-Trichloropropane	ND	ug/kg	4.3	05/31/06 13:38	DLK	96-18-4		
1,2,4-Trimethylbenzene	ND	ug/kg	4.3	05/31/06 13:38	DLK	95-63-6		
1,3,5-Trimethylbenzene	ND	ug/kg	4.3	05/31/06 13:38	DLK	108-67-8		
Vinyl acetate	ND	ug/kg	43.	05/31/06 13:38	DLK	108-05-4		
Vinyl chloride	ND	ug/kg	8.7	05/31/06 13:38	DLK	75-01-4		
Xylene (Total)	ND	ug/kg	4.3	05/31/06 13:38	DLK	1330-20-7		
m&p-Xylene	ND	ug/kg	8.7	05/31/06 13:38	DLK			
o-Xylene	ND	ug/kg	4.3	05/31/06 13:38	DLK	95-47-6		
Toluene-d8 (S)	101	%		05/31/06 13:38	DLK	2037-26-5		
4-Bromofluorobenzene (S)	96	%		05/31/06 13:38	DLK	460-00-4		
Dibromofluoromethane (S)	91	%		05/31/06 13:38	DLK	1868-53-7		
1,2-Dichloroethane-d4 (S)	93	%		05/31/06 13:38	DLK	17060-07-0		

Pace Analytical®
www.pacelabs.com

Pace Analytical Services, Inc.
9800 Kincey Avenue, Suite 100
Huntersville, NC 28078
Phone: 704.875.9092
Fax: 704.875.9091

Pace Analytical Services, Inc.
2225 Riverside Drive
Asheville, NC 28804
Phone: 828.254.7176
Fax: 828.252.4618

Lab Project Number: 92119722
Client Project ID: Affinia-Wix/41284

Lab Sample No: 927002014 | Project Sample Number: 92119722-007 | Date Collected: 05/17/06 16:55
Client Sample ID: STB-9 (8-10) | Matrix: Soil | Date Received: 05/19/06 09:30

Parameters	Results	Units	Report Limit	Analyzed	By	CAS No.	Qual	RegLmt
Wet Chemistry								
Percent Moisture	Method: % Moisture							
Percent Moisture	15.5	%		05/19/06 16:01	TNM			
GC/MS Volatiles								
GC/MS VOCs 5035/8260 low level	Method: EPA 8260							
Acetone	ND	ug/kg	86.	05/22/06 18:45	MSF	67-64-1		
Benzene	13.	ug/kg	4.3	05/22/06 18:45	MSF	71-43-2		
Bromobenzene	ND	ug/kg	4.3	05/22/06 18:45	MSF	108-86-1		
Bromochloromethane	ND	ug/kg	4.3	05/22/06 18:45	MSF	74-97-5		
Bromodichloromethane	ND	ug/kg	4.3	05/22/06 18:45	MSF	75-27-4		
Bromoform	ND	ug/kg	4.3	05/22/06 18:45	MSF	75-25-2		
Bromomethane	ND	ug/kg	8.6	05/22/06 18:45	MSF	74-83-9		
2-Butanone (MEK)	ND	ug/kg	86.	05/22/06 18:45	MSF	78-93-3		
n-Butylbenzene	ND	ug/kg	4.3	05/22/06 18:45	MSF	104-51-8		
sec-Butylbenzene	ND	ug/kg	4.3	05/22/06 18:45	MSF	135-98-8		
tert-Butylbenzene	ND	ug/kg	4.3	05/22/06 18:45	MSF	98-06-6		
Carbon tetrachloride	ND	ug/kg	4.3	05/22/06 18:45	MSF	56-23-5		
Chlorobenzene	ND	ug/kg	4.3	05/22/06 18:45	MSF	108-90-7		
Chloroethane	ND	ug/kg	8.6	05/22/06 18:45	MSF	75-00-3		
Chloroform	ND	ug/kg	4.3	05/22/06 18:45	MSF	67-66-3		
Chloromethane	ND	ug/kg	8.6	05/22/06 18:45	MSF	74-87-3		
2-Chlorotoluene	ND	ug/kg	4.3	05/22/06 18:45	MSF	95-49-8		
4-Chlorotoluene	ND	ug/kg	4.3	05/22/06 18:45	MSF	106-43-4		
1,2-Dibromo-3-chloropropane	ND	ug/kg	4.3	05/22/06 18:45	MSF	96-12-8		
Dibromochloromethane	ND	ug/kg	4.3	05/22/06 18:45	MSF	124-48-1		
1,2-Dibromoethane (EDB)	ND	ug/kg	4.3	05/22/06 18:45	MSF	106-93-4		
Dibromomethane	ND	ug/kg	4.3	05/22/06 18:45	MSF	74-95-3		
1,2-Dichlorobenzene	ND	ug/kg	4.3	05/22/06 18:45	MSF	95-50-1		
1,3-Dichlorobenzene	ND	ug/kg	4.3	05/22/06 18:45	MSF	541-73-1		
1,4-Dichlorobenzene	ND	ug/kg	4.3	05/22/06 18:45	MSF	106-46-7		
Dichlorodifluoromethane	ND	ug/kg	8.6	05/22/06 18:45	MSF	75-71-8		
1,1-Dichloroethane	ND	ug/kg	4.3	05/22/06 18:45	MSF	75-34-3		
1,2-Dichloroethane	ND	ug/kg	4.3	05/22/06 18:45	MSF	107-06-2		
1,1-Dichloroethene	ND	ug/kg	4.3	05/22/06 18:45	MSF	75-35-4		
cis-1,2-Dichloroethene	4.8	ug/kg	4.3	05/22/06 18:45	MSF	156-59-2		
trans-1,2-Dichloroethene	ND	ug/kg	4.3	05/22/06 18:45	MSF	156-60-5		
1,2-Dichloropropane	ND	ug/kg	4.3	05/22/06 18:45	MSF	78-87-5		
1,3-Dichloropropane	ND	ug/kg	4.3	05/22/06 18:45	MSF	142-28-9		

Pace Analytical®
www.pacelabs.com

Pace Analytical Services, Inc.
9800 Kincey Avenue, Suite 100
Huntersville, NC 28078
Phone: 704.875.9092
Fax: 704.875.9091

Pace Analytical Services, Inc.
2225 Riverside Drive
Asheville, NC 28804
Phone: 828.254.7176
Fax: 828.252.4618

Lab Project Number: 92119722
Client Project ID: Affinia-Wix/41284

Lab Sample No: 927002014 | Project Sample Number: 92119722-007 | Date Collected: 05/17/06 16:55
Client Sample ID: STB-9 (8-10) | Matrix: Soil | Date Received: 05/19/06 09:30

Parameters	Results	Units	Report Limit	Analyzed	By	CAS No.	Qual	RegLmt
2,2-Dichloropropane	ND	ug/kg	4.3	05/22/06 18:45	MSF	594-20-7		
1,1-Dichloropropene	ND	ug/kg	4.3	05/22/06 18:45	MSF	563-58-6		
cis-1,3-Dichloropropene	ND	ug/kg	4.3	05/22/06 18:45	MSF	10061-01-5		
trans-1,3-Dichloropropene	ND	ug/kg	4.3	05/22/06 18:45	MSF	10061-02-6		
Diisopropyl ether	ND	ug/kg	4.3	05/22/06 18:45	MSF	108-20-3		
Ethylbenzene	110	ug/kg	4.3	05/22/06 18:45	MSF	100-41-4		
Hexachloro-1,3-butadiene	ND	ug/kg	4.3	05/22/06 18:45	MSF	87-68-3		
2-Hexanone	ND	ug/kg	43.	05/22/06 18:45	MSF	591-78-6		
Isopropylbenzene (Cumene)	79.	ug/kg	4.3	05/22/06 18:45	MSF	98-82-8		
p-Isopropyltoluene	ND	ug/kg	4.3	05/22/06 18:45	MSF	99-87-6		
Methylene chloride	ND	ug/kg	4.3	05/22/06 18:45	MSF	75-09-2		
4-Methyl-2-pentanone (MIBK)	ND	ug/kg	43.	05/22/06 18:45	MSF	108-10-1		
Methyl-tert-butyl ether	ND	ug/kg	4.3	05/22/06 18:45	MSF	1634-04-4		
Naphthalene	5.0	ug/kg	4.3	05/22/06 18:45	MSF	91-20-3		
n-Propylbenzene	190	ug/kg	4.3	05/22/06 18:45	MSF	103-65-1	4	
Styrene	ND	ug/kg	4.3	05/22/06 18:45	MSF	100-42-5		
1,1,1,2-Tetrachloroethane	ND	ug/kg	4.3	05/22/06 18:45	MSF	630-20-6		
1,1,2,2-Tetrachloroethane	ND	ug/kg	4.3	05/22/06 18:45	MSF	79-34-5		
Tetrachloroethene	ND	ug/kg	4.3	05/22/06 18:45	MSF	127-18-4		
Toluene	380000	ug/kg	22000	05/22/06 18:45	MSF	108-88-3		
1,2,3-Trichlorobenzene	ND	ug/kg	4.3	05/22/06 18:45	MSF	87-61-6		
1,2,4-Trichlorobenzene	ND	ug/kg	4.3	05/22/06 18:45	MSF	120-82-1		
1,1,1-Trichloroethane	ND	ug/kg	4.3	05/22/06 18:45	MSF	71-55-6		
1,1,2-Trichloroethane	ND	ug/kg	4.3	05/22/06 18:45	MSF	79-00-5		
Trichloroethene	ND	ug/kg	4.3	05/22/06 18:45	MSF	79-01-6		
Trichlorofluoromethane	ND	ug/kg	4.3	05/22/06 18:45	MSF	75-69-4		
1,2,3-Trichloropropane	ND	ug/kg	4.3	05/22/06 18:45	MSF	96-18-4		
1,2,4-Trimethylbenzene	570	ug/kg	4.3	05/22/06 18:45	MSF	95-63-6	4	
1,3,5-Trimethylbenzene	230	ug/kg	4.3	05/22/06 18:45	MSF	108-67-8	4	
Vinyl acetate	ND	ug/kg	43.	05/22/06 18:45	MSF	108-05-4		
Vinyl chloride	ND	ug/kg	8.6	05/22/06 18:45	MSF	75-01-4		
Xylene (Total)	300	ug/kg	4.3	05/22/06 18:45	MSF	1330-20-7		
m&p-Xylene	160	ug/kg	8.6	05/22/06 18:45	MSF			
o-Xylene	140	ug/kg	4.3	05/22/06 18:45	MSF	95-47-6		
Toluene-d8 (S)	12	%		05/22/06 18:45	MSF	2037-26-5	2	
4-Bromofluorobenzene (S)	96	%		05/22/06 18:45	MSF	460-00-4		
Dibromofluoromethane (S)	97	%		05/22/06 18:45	MSF	1868-53-7		
1,2-Dichloroethane-d4 (S)	98	%		05/22/06 18:45	MSF	17060-07-0		

Pace Analytical®
www.pacelabs.com

Pace Analytical Services, Inc.
9800 Kincey Avenue, Suite 100
Huntersville, NC 28078
Phone: 704.875.9092
Fax: 704.875.9091

Pace Analytical Services, Inc.
2225 Riverside Drive
Asheville, NC 28804
Phone: 828.254.7176
Fax: 828.252.4618

Lab Project Number: 92119722
Client Project ID: Affinia-Wix/41284

Lab Sample No: 927002022 | Project Sample Number: 92119722-008 | Date Collected: 05/16/06 12:40
Client Sample ID: STB-2 (6-8) | Matrix: Soil | Date Received: 05/19/06 09:30

Parameters	Results	Units	Report Limit	Analyzed	By	CAS No.	Qual	RegLmt
Wet Chemistry								
Percent Moisture	Method: % Moisture							
Percent Moisture	15.1	%		05/19/06 15:59	TNM			
GC/MS Volatiles								
GC/MS VOCs 5035/8260 low level	Method: EPA 8260							
Acetone	ND	ug/kg	42000	05/22/06 22:00	DLK	67-64-1		
Benzene	ND	ug/kg	2100	05/22/06 22:00	DLK	71-43-2		
Bromobenzene	ND	ug/kg	2100	05/22/06 22:00	DLK	108-86-1		
Bromochloromethane	ND	ug/kg	2100	05/22/06 22:00	DLK	74-97-5		
Bromodichloromethane	ND	ug/kg	2100	05/22/06 22:00	DLK	75-27-4		
Bromoform	ND	ug/kg	2100	05/22/06 22:00	DLK	75-25-2		
Bromomethane	ND	ug/kg	4200	05/22/06 22:00	DLK	74-83-9		
2-Butanone (MEK)	ND	ug/kg	42000	05/22/06 22:00	DLK	78-93-3		
n-Butylbenzene	ND	ug/kg	2100	05/22/06 22:00	DLK	104-51-8		
sec-Butylbenzene	ND	ug/kg	2100	05/22/06 22:00	DLK	135-98-8		
tert-Butylbenzene	ND	ug/kg	2100	05/22/06 22:00	DLK	98-06-6		
Carbon tetrachloride	ND	ug/kg	2100	05/22/06 22:00	DLK	56-23-5		
Chlorobenzene	ND	ug/kg	2100	05/22/06 22:00	DLK	108-90-7		
Chloroethane	ND	ug/kg	4200	05/22/06 22:00	DLK	75-00-3		
Chloroform	ND	ug/kg	2100	05/22/06 22:00	DLK	67-66-3		
Chloromethane	ND	ug/kg	4200	05/22/06 22:00	DLK	74-87-3		
2-Chlorotoluene	ND	ug/kg	2100	05/22/06 22:00	DLK	95-49-8		
4-Chlorotoluene	ND	ug/kg	2100	05/22/06 22:00	DLK	106-43-4		
1,2-Dibromo-3-chloropropane	ND	ug/kg	2100	05/22/06 22:00	DLK	96-12-8		
Dibromochloromethane	ND	ug/kg	2100	05/22/06 22:00	DLK	124-48-1		
1,2-Dibromoethane (EDB)	ND	ug/kg	2100	05/22/06 22:00	DLK	106-93-4		
Dibromomethane	ND	ug/kg	2100	05/22/06 22:00	DLK	74-95-3		
1,2-Dichlorobenzene	ND	ug/kg	2100	05/22/06 22:00	DLK	95-50-1		
1,3-Dichlorobenzene	ND	ug/kg	2100	05/22/06 22:00	DLK	541-73-1		
1,4-Dichlorobenzene	ND	ug/kg	2100	05/22/06 22:00	DLK	106-46-7		
Dichlorodifluoromethane	ND	ug/kg	4200	05/22/06 22:00	DLK	75-71-8		
1,1-Dichloroethane	ND	ug/kg	2100	05/22/06 22:00	DLK	75-34-3		
1,2-Dichloroethane	ND	ug/kg	2100	05/22/06 22:00	DLK	107-06-2		
1,1-Dichloroethene	ND	ug/kg	2100	05/22/06 22:00	DLK	75-35-4		
cis-1,2-Dichloroethene	ND	ug/kg	2100	05/22/06 22:00	DLK	156-59-2		
trans-1,2-Dichloroethene	ND	ug/kg	2100	05/22/06 22:00	DLK	156-60-5		
1,2-Dichloropropane	ND	ug/kg	2100	05/22/06 22:00	DLK	78-87-5		
1,3-Dichloropropane	ND	ug/kg	2100	05/22/06 22:00	DLK	142-28-9		

Pace Analytical®
www.pacelabs.com

Pace Analytical Services, Inc.
9800 Kincey Avenue, Suite 100
Huntersville, NC 28078
Phone: 704.875.9092
Fax: 704.875.9091

Pace Analytical Services, Inc.
2225 Riverside Drive
Asheville, NC 28804
Phone: 828.254.7176
Fax: 828.252.4618

Lab Project Number: 92119722
Client Project ID: Affinia-Wix/41284

Lab Sample No: 927002022 | Project Sample Number: 92119722-008 | Date Collected: 05/16/06 12:40
Client Sample ID: STB-2 (6-8) | Matrix: Soil | Date Received: 05/19/06 09:30

Parameters	Results	Units	Report Limit	Analyzed	By	CAS No.	Qual	RegLmt
2,2-Dichloropropane	ND	ug/kg	2100	05/22/06 22:00	DLK	594-20-7		
1,1-Dichloropropene	ND	ug/kg	2100	05/22/06 22:00	DLK	563-58-6		
cis-1,3-Dichloropropene	ND	ug/kg	2100	05/22/06 22:00	DLK	10061-01-5		
trans-1,3-Dichloropropene	ND	ug/kg	2100	05/22/06 22:00	DLK	10061-02-6		
Diisopropyl ether	ND	ug/kg	2100	05/22/06 22:00	DLK	108-20-3		
Ethylbenzene	ND	ug/kg	2100	05/22/06 22:00	DLK	100-41-4		
Hexachloro-1,3-butadiene	ND	ug/kg	2100	05/22/06 22:00	DLK	87-68-3		
2-Hexanone	ND	ug/kg	21000	05/22/06 22:00	DLK	591-78-6		
Isopropylbenzene (Cumene)	ND	ug/kg	2100	05/22/06 22:00	DLK	98-82-8		
p-Isopropyltoluene	ND	ug/kg	2100	05/22/06 22:00	DLK	99-87-6		
Methylene chloride	ND	ug/kg	2100	05/22/06 22:00	DLK	75-09-2		
4-Methyl-2-pentanone (MIBK)	ND	ug/kg	21000	05/22/06 22:00	DLK	108-10-1		
Methyl-tert-butyl ether	ND	ug/kg	2100	05/22/06 22:00	DLK	1634-04-4		
Naphthalene	ND	ug/kg	2100	05/22/06 22:00	DLK	91-20-3		
n-Propylbenzene	ND	ug/kg	2100	05/22/06 22:00	DLK	103-65-1		
Styrene	ND	ug/kg	2100	05/22/06 22:00	DLK	100-42-5		
1,1,1,2-Tetrachloroethane	ND	ug/kg	2100	05/22/06 22:00	DLK	630-20-6		
1,1,2,2-Tetrachloroethane	ND	ug/kg	2100	05/22/06 22:00	DLK	79-34-5		
Tetrachloroethene	ND	ug/kg	2100	05/22/06 22:00	DLK	127-18-4		
Toluene	1800000	ug/kg	21000	05/22/06 22:00	DLK	108-88-3	4	
1,2,3-Trichlorobenzene	ND	ug/kg	2100	05/22/06 22:00	DLK	87-61-6		
1,2,4-Trichlorobenzene	ND	ug/kg	2100	05/22/06 22:00	DLK	120-82-1		
1,1,1-Trichloroethane	ND	ug/kg	2100	05/22/06 22:00	DLK	71-55-6		
1,1,2-Trichloroethane	ND	ug/kg	2100	05/22/06 22:00	DLK	79-00-5		
Trichloroethene	ND	ug/kg	2100	05/22/06 22:00	DLK	79-01-6		
Trichlorofluoromethane	ND	ug/kg	2100	05/22/06 22:00	DLK	75-69-4		
1,2,3-Trichloropropane	ND	ug/kg	2100	05/22/06 22:00	DLK	96-18-4		
1,2,4-Trimethylbenzene	4100	ug/kg	2100	05/22/06 22:00	DLK	95-63-6		
1,3,5-Trimethylbenzene	ND	ug/kg	2100	05/22/06 22:00	DLK	108-67-8		
Vinyl acetate	ND	ug/kg	21000	05/22/06 22:00	DLK	108-05-4		
Vinyl chloride	ND	ug/kg	4200	05/22/06 22:00	DLK	75-01-4		
Xylene (Total)	ND	ug/kg	4.2	05/22/06 22:00	DLK	1330-20-7		
m&p-Xylene	ND	ug/kg	4200	05/22/06 22:00	DLK			
o-Xylene	ND	ug/kg	2100	05/22/06 22:00	DLK	95-47-6		
Toluene-d8 (S)	99	%		05/22/06 22:00	DLK	2037-26-5		
4-Bromofluorobenzene (S)	104	%		05/22/06 22:00	DLK	460-00-4		
Dibromofluoromethane (S)	103	%		05/22/06 22:00	DLK	1868-53-7		
1,2-Dichloroethane-d4 (S)	110	%		05/22/06 22:00	DLK	17060-07-0		

Pace Analytical®
www.pacelabs.com

Pace Analytical Services, Inc.
9800 Kincey Avenue, Suite 100
Huntersville, NC 28078
Phone: 704.875.9092
Fax: 704.875.9091

Pace Analytical Services, Inc.
2225 Riverside Drive
Asheville, NC 28804
Phone: 828.254.7176
Fax: 828.252.4618

Lab Project Number: 92119722
Client Project ID: Affinia-Wix/41284

Lab Sample No: 927002030 | Project Sample Number: 92119722-009 | Date Collected: 05/16/06 14:30
Client Sample ID: STB-3 (8-10) | Matrix: Soil | Date Received: 05/19/06 09:30

Parameters	Results	Units	Report Limit	Analyzed	By	CAS No.	Qual	RegLmt
Wet Chemistry								
Percent Moisture	Method: % Moisture							
Percent Moisture	13.8	%		05/19/06 15:59	TNM			
GC/MS Volatiles								
GC/MS VOCs 5035/8260 low level	Method: EPA 8260							
Acetone	ND	ug/kg	77.	05/22/06 20:30	DLK	67-64-1		
Benzene	ND	ug/kg	3.8	05/22/06 20:30	DLK	71-43-2		
Bromobenzene	ND	ug/kg	3.8	05/22/06 20:30	DLK	108-86-1		
Bromochloromethane	ND	ug/kg	3.8	05/22/06 20:30	DLK	74-97-5		
Bromodichloromethane	ND	ug/kg	3.8	05/22/06 20:30	DLK	75-27-4		
Bromoform	ND	ug/kg	3.8	05/22/06 20:30	DLK	75-25-2		
Bromomethane	ND	ug/kg	7.7	05/22/06 20:30	DLK	74-83-9		
2-Butanone (MEK)	ND	ug/kg	77.	05/22/06 20:30	DLK	78-93-3		
n-Butylbenzene	ND	ug/kg	3.8	05/22/06 20:30	DLK	104-51-8		
sec-Butylbenzene	ND	ug/kg	3.8	05/22/06 20:30	DLK	135-98-8		
tert-Butylbenzene	ND	ug/kg	3.8	05/22/06 20:30	DLK	98-06-6		
Carbon tetrachloride	ND	ug/kg	3.8	05/22/06 20:30	DLK	56-23-5		
Chlorobenzene	ND	ug/kg	3.8	05/22/06 20:30	DLK	108-90-7		
Chloroethane	ND	ug/kg	7.7	05/22/06 20:30	DLK	75-00-3		
Chloroform	ND	ug/kg	3.8	05/22/06 20:30	DLK	67-66-3		
Chloromethane	ND	ug/kg	7.7	05/22/06 20:30	DLK	74-87-3		
2-Chlorotoluene	ND	ug/kg	3.8	05/22/06 20:30	DLK	95-49-8		
4-Chlorotoluene	ND	ug/kg	3.8	05/22/06 20:30	DLK	106-43-4		
1,2-Dibromo-3-chloropropane	ND	ug/kg	3.8	05/22/06 20:30	DLK	96-12-8		
Dibromochloromethane	ND	ug/kg	3.8	05/22/06 20:30	DLK	124-48-1		
1,2-Dibromoethane (EDB)	ND	ug/kg	3.8	05/22/06 20:30	DLK	106-93-4		
Dibromomethane	ND	ug/kg	3.8	05/22/06 20:30	DLK	74-95-3		
1,2-Dichlorobenzene	ND	ug/kg	3.8	05/22/06 20:30	DLK	95-50-1		
1,3-Dichlorobenzene	ND	ug/kg	3.8	05/22/06 20:30	DLK	541-73-1		
1,4-Dichlorobenzene	ND	ug/kg	3.8	05/22/06 20:30	DLK	106-46-7		
Dichlorodifluoromethane	ND	ug/kg	7.7	05/22/06 20:30	DLK	75-71-8		
1,1-Dichloroethane	ND	ug/kg	3.8	05/22/06 20:30	DLK	75-34-3		
1,2-Dichloroethane	ND	ug/kg	3.8	05/22/06 20:30	DLK	107-06-2		
1,1-Dichloroethene	ND	ug/kg	3.8	05/22/06 20:30	DLK	75-35-4		
cis-1,2-Dichloroethene	ND	ug/kg	3.8	05/22/06 20:30	DLK	156-59-2		
trans-1,2-Dichloroethene	ND	ug/kg	3.8	05/22/06 20:30	DLK	156-60-5		
1,2-Dichloropropane	ND	ug/kg	3.8	05/22/06 20:30	DLK	78-87-5		
1,3-Dichloropropane	ND	ug/kg	3.8	05/22/06 20:30	DLK	142-28-9		

Pace Analytical®
www.pacelabs.com

Pace Analytical Services, Inc.
9800 Kincey Avenue, Suite 100
Huntersville, NC 28078
Phone: 704.875.9092
Fax: 704.875.9091

Pace Analytical Services, Inc.
2225 Riverside Drive
Asheville, NC 28804
Phone: 828.254.7176
Fax: 828.252.4618

Lab Project Number: 92119722
Client Project ID: Affinia-Wix/41284

Lab Sample No: 927002030 | Project Sample Number: 92119722-009 | Date Collected: 05/16/06 14:30
Client Sample ID: STB-3 (8-10) | Matrix: Soil | Date Received: 05/19/06 09:30

Parameters	Results	Units	Report Limit	Analyzed	By	CAS No.	Qual	RegLmt
2,2-Dichloropropane	ND	ug/kg	3.8	05/22/06 20:30	DLK	594-20-7		
1,1-Dichloropropene	ND	ug/kg	3.8	05/22/06 20:30	DLK	563-58-6		
cis-1,3-Dichloropropene	ND	ug/kg	3.8	05/22/06 20:30	DLK	10061-01-5		
trans-1,3-Dichloropropene	ND	ug/kg	3.8	05/22/06 20:30	DLK	10061-02-6		
Diisopropyl ether	ND	ug/kg	3.8	05/22/06 20:30	DLK	108-20-3		
Ethylbenzene	9.9	ug/kg	3.8	05/22/06 20:30	DLK	100-41-4		
Hexachloro-1,3-butadiene	ND	ug/kg	3.8	05/22/06 20:30	DLK	87-68-3		
2-Hexanone	ND	ug/kg	38.	05/22/06 20:30	DLK	591-78-6		
Isopropylbenzene (Cumene)	ND	ug/kg	3.8	05/22/06 20:30	DLK	98-82-8		
p-Isopropyltoluene	ND	ug/kg	3.8	05/22/06 20:30	DLK	99-87-6		
Methylene chloride	ND	ug/kg	3.8	05/22/06 20:30	DLK	75-09-2		
4-Methyl-2-pentanone (MIBK)	ND	ug/kg	38.	05/22/06 20:30	DLK	108-10-1		
Methyl-tert-butyl ether	ND	ug/kg	3.8	05/22/06 20:30	DLK	1634-04-4		
Naphthalene	ND	ug/kg	3.8	05/22/06 20:30	DLK	91-20-3		
n-Propylbenzene	ND	ug/kg	3.8	05/22/06 20:30	DLK	103-65-1		
Styrene	ND	ug/kg	3.8	05/22/06 20:30	DLK	100-42-5		
1,1,1,2-Tetrachloroethane	ND	ug/kg	3.8	05/22/06 20:30	DLK	630-20-6		
1,1,2,2-Tetrachloroethane	ND	ug/kg	3.8	05/22/06 20:30	DLK	79-34-5		
Tetrachloroethene	ND	ug/kg	3.8	05/22/06 20:30	DLK	127-18-4		
Toluene	30000	ug/kg	960	05/22/06 20:30	DLK	108-88-3		
1,2,3-Trichlorobenzene	ND	ug/kg	3.8	05/22/06 20:30	DLK	87-61-6		
1,2,4-Trichlorobenzene	ND	ug/kg	3.8	05/22/06 20:30	DLK	120-82-1		
1,1,1-Trichloroethane	ND	ug/kg	3.8	05/22/06 20:30	DLK	71-55-6		
1,1,2-Trichloroethane	ND	ug/kg	3.8	05/22/06 20:30	DLK	79-00-5		
Trichloroethene	ND	ug/kg	3.8	05/22/06 20:30	DLK	79-01-6		
Trichlorofluoromethane	ND	ug/kg	3.8	05/22/06 20:30	DLK	75-69-4		
1,2,3-Trichloropropane	ND	ug/kg	3.8	05/22/06 20:30	DLK	96-18-4		
1,2,4-Trimethylbenzene	8.2	ug/kg	3.8	05/22/06 20:30	DLK	95-63-6		
1,3,5-Trimethylbenzene	ND	ug/kg	3.8	05/22/06 20:30	DLK	108-67-8		
Vinyl acetate	ND	ug/kg	38.	05/22/06 20:30	DLK	108-05-4		
Vinyl chloride	ND	ug/kg	7.7	05/22/06 20:30	DLK	75-01-4		
Xylene (Total)	14.	ug/kg	3.8	05/22/06 20:30	DLK	1330-20-7		
m&p-Xylene	12.	ug/kg	7.7	05/22/06 20:30	DLK			
o-Xylene	ND	ug/kg	3.8	05/22/06 20:30	DLK	95-47-6		
Toluene-d8 (S)	96	%		05/22/06 20:30	DLK	2037-26-5		
4-Bromofluorobenzene (S)	105	%		05/22/06 20:30	DLK	460-00-4		
Dibromofluoromethane (S)	96	%		05/22/06 20:30	DLK	1868-53-7		
1,2-Dichloroethane-d4 (S)	92	%		05/22/06 20:30	DLK	17060-07-0		

Pace Analytical®
www.pacelabs.com

Pace Analytical Services, Inc.
9800 Kincey Avenue, Suite 100
Huntersville, NC 28078
Phone: 704.875.9092
Fax: 704.875.9091

Pace Analytical Services, Inc.
2225 Riverside Drive
Asheville, NC 28804
Phone: 828.254.7176
Fax: 828.252.4618

Lab Project Number: 92119722
Client Project ID: Affinia-Wix/41284

Lab Sample No: 927002048 | Project Sample Number: 92119722-010 | Date Collected: 05/16/06 15:45
Client Sample ID: STB-4 (4-6) | Matrix: Soil | Date Received: 05/19/06 09:30

Parameters	Results	Units	Report Limit	Analyzed	By	CAS No.	Qual	RegLmt
Wet Chemistry								
Percent Moisture	Method: % Moisture							
Percent Moisture	18.2	%		05/19/06 16:00	TNM			
GC/MS Volatiles								
GC/MS VOCs 5035/8260 low level	Method: EPA 8260							
Acetone	ND	ug/kg	4500	05/23/06 20:39	DLK	67-64-1		
Benzene	ND	ug/kg	220	05/23/06 20:39	DLK	71-43-2		
Bromobenzene	ND	ug/kg	220	05/23/06 20:39	DLK	108-86-1		
Bromochloromethane	ND	ug/kg	220	05/23/06 20:39	DLK	74-97-5		
Bromodichloromethane	ND	ug/kg	220	05/23/06 20:39	DLK	75-27-4		
Bromoform	ND	ug/kg	220	05/23/06 20:39	DLK	75-25-2		
Bromomethane	ND	ug/kg	450	05/23/06 20:39	DLK	74-83-9		
2-Butanone (MEK)	ND	ug/kg	4500	05/23/06 20:39	DLK	78-93-3		
n-Butylbenzene	ND	ug/kg	220	05/23/06 20:39	DLK	104-51-8		
sec-Butylbenzene	ND	ug/kg	220	05/23/06 20:39	DLK	135-98-8		
tert-Butylbenzene	ND	ug/kg	220	05/23/06 20:39	DLK	98-06-6		
Carbon tetrachloride	ND	ug/kg	220	05/23/06 20:39	DLK	56-23-5		
Chlorobenzene	ND	ug/kg	220	05/23/06 20:39	DLK	108-90-7		
Chloroethane	ND	ug/kg	450	05/23/06 20:39	DLK	75-00-3		
Chloroform	ND	ug/kg	220	05/23/06 20:39	DLK	67-66-3		
Chloromethane	ND	ug/kg	450	05/23/06 20:39	DLK	74-87-3		
2-Chlorotoluene	ND	ug/kg	220	05/23/06 20:39	DLK	95-49-8		
4-Chlorotoluene	ND	ug/kg	220	05/23/06 20:39	DLK	106-43-4		
1,2-Dibromo-3-chloropropane	ND	ug/kg	220	05/23/06 20:39	DLK	96-12-8		
Dibromochloromethane	ND	ug/kg	220	05/23/06 20:39	DLK	124-48-1		
1,2-Dibromoethane (EDB)	ND	ug/kg	220	05/23/06 20:39	DLK	106-93-4		
Dibromomethane	ND	ug/kg	220	05/23/06 20:39	DLK	74-95-3		
1,2-Dichlorobenzene	ND	ug/kg	220	05/23/06 20:39	DLK	95-50-1		
1,3-Dichlorobenzene	ND	ug/kg	220	05/23/06 20:39	DLK	541-73-1		
1,4-Dichlorobenzene	ND	ug/kg	220	05/23/06 20:39	DLK	106-46-7		
Dichlorodifluoromethane	ND	ug/kg	450	05/23/06 20:39	DLK	75-71-8		
1,1-Dichloroethane	ND	ug/kg	220	05/23/06 20:39	DLK	75-34-3		
1,2-Dichloroethane	ND	ug/kg	220	05/23/06 20:39	DLK	107-06-2		
1,1-Dichloroethene	ND	ug/kg	220	05/23/06 20:39	DLK	75-35-4		
cis-1,2-Dichloroethene	ND	ug/kg	220	05/23/06 20:39	DLK	156-59-2		
trans-1,2-Dichloroethene	ND	ug/kg	220	05/23/06 20:39	DLK	156-60-5		
1,2-Dichloropropane	ND	ug/kg	220	05/23/06 20:39	DLK	78-87-5		
1,3-Dichloropropane	ND	ug/kg	220	05/23/06 20:39	DLK	142-28-9		

Pace Analytical®
www.pacelabs.com

Pace Analytical Services, Inc.
9800 Kincey Avenue, Suite 100
Huntersville, NC 28078
Phone: 704.875.9092
Fax: 704.875.9091

Pace Analytical Services, Inc.
2225 Riverside Drive
Asheville, NC 28804
Phone: 828.254.7176
Fax: 828.252.4618

Lab Project Number: 92119722
Client Project ID: Affinia-Wix/41284

Lab Sample No: 927002048 | Project Sample Number: 92119722-010 | Date Collected: 05/16/06 15:45
Client Sample ID: STB-4 (4-6) | Matrix: Soil | Date Received: 05/19/06 09:30

Parameters	Results	Units	Report Limit	Analyzed	By	CAS No.	Qual	RegLmt
2,2-Dichloropropane	ND	ug/kg	220	05/23/06 20:39	DLK	594-20-7		
1,1-Dichloropropene	ND	ug/kg	220	05/23/06 20:39	DLK	563-58-6		
cis-1,3-Dichloropropene	ND	ug/kg	220	05/23/06 20:39	DLK	10061-01-5		
trans-1,3-Dichloropropene	ND	ug/kg	220	05/23/06 20:39	DLK	10061-02-6		
Diisopropyl ether	ND	ug/kg	220	05/23/06 20:39	DLK	108-20-3		
Ethylbenzene	290	ug/kg	220	05/23/06 20:39	DLK	100-41-4		
Hexachloro-1,3-butadiene	ND	ug/kg	220	05/23/06 20:39	DLK	87-68-3		
2-Hexanone	ND	ug/kg	2200	05/23/06 20:39	DLK	591-78-6		
Isopropylbenzene (Cumene)	ND	ug/kg	220	05/23/06 20:39	DLK	98-82-8		
p-Isopropyltoluene	410	ug/kg	220	05/23/06 20:39	DLK	99-87-6		
Methylene chloride	ND	ug/kg	220	05/23/06 20:39	DLK	75-09-2		
4-Methyl-2-pentanone (MIBK)	ND	ug/kg	2200	05/23/06 20:39	DLK	108-10-1		
Methyl-tert-butyl ether	ND	ug/kg	220	05/23/06 20:39	DLK	1634-04-4		
Naphthalene	ND	ug/kg	220	05/23/06 20:39	DLK	91-20-3		
n-Propylbenzene	ND	ug/kg	220	05/23/06 20:39	DLK	103-65-1		
Styrene	ND	ug/kg	220	05/23/06 20:39	DLK	100-42-5		
1,1,1,2-Tetrachloroethane	ND	ug/kg	220	05/23/06 20:39	DLK	630-20-6		
1,1,2,2-Tetrachloroethane	ND	ug/kg	220	05/23/06 20:39	DLK	79-34-5		
Tetrachloroethene	ND	ug/kg	220	05/23/06 20:39	DLK	127-18-4		
Toluene	66000	ug/kg	2200	05/23/06 20:39	DLK	108-88-3		
1,2,3-Trichlorobenzene	ND	ug/kg	220	05/23/06 20:39	DLK	87-61-6		
1,2,4-Trichlorobenzene	ND	ug/kg	220	05/23/06 20:39	DLK	120-82-1		
1,1,1-Trichloroethane	ND	ug/kg	220	05/23/06 20:39	DLK	71-55-6		
1,1,2-Trichloroethane	ND	ug/kg	220	05/23/06 20:39	DLK	79-00-5		
Trichloroethene	ND	ug/kg	220	05/23/06 20:39	DLK	79-01-6		
Trichlorofluoromethane	ND	ug/kg	220	05/23/06 20:39	DLK	75-69-4		
1,2,3-Trichloropropane	ND	ug/kg	220	05/23/06 20:39	DLK	96-18-4		
1,2,4-Trimethylbenzene	ND	ug/kg	220	05/23/06 20:39	DLK	95-63-6		
1,3,5-Trimethylbenzene	ND	ug/kg	220	05/23/06 20:39	DLK	108-67-8		
Vinyl acetate	ND	ug/kg	2200	05/23/06 20:39	DLK	108-05-4		
Vinyl chloride	ND	ug/kg	450	05/23/06 20:39	DLK	75-01-4		
Xylene (Total)	450	ug/kg	4.5	05/23/06 20:39	DLK	1330-20-7		
m&p-Xylene	450	ug/kg	450	05/23/06 20:39	DLK			
o-Xylene	ND	ug/kg	220	05/23/06 20:39	DLK	95-47-6		
Toluene-d8 (S)	98	%		05/23/06 20:39	DLK	2037-26-5		
4-Bromofluorobenzene (S)	91	%		05/23/06 20:39	DLK	460-00-4		
Dibromofluoromethane (S)	94	%		05/23/06 20:39	DLK	1868-53-7		
1,2-Dichloroethane-d4 (S)	100	%		05/23/06 20:39	DLK	17060-07-0		

Pace Analytical®
www.pacelabs.com

Pace Analytical Services, Inc.
9800 Kincey Avenue, Suite 100
Huntersville, NC 28078
Phone: 704.875.9092
Fax: 704.875.9091

Pace Analytical Services, Inc.
2225 Riverside Drive
Asheville, NC 28804
Phone: 828.254.7176
Fax: 828.252.4618

Lab Project Number: 92119722
Client Project ID: Affinia-Wix/41284

Lab Sample No: 927002055
Client Sample ID: STB-8 (6-8)

Project Sample Number: 92119722-011
Matrix: Soil

Date Collected: 05/17/06 15:30
Date Received: 05/19/06 09:30

Parameters	Results	Units	Report Limit	Analyzed	By	CAS No.	Qual	RegLmt
Wet Chemistry								
Percent Moisture	Method: % Moisture							
Percent Moisture	16.4	%		05/19/06 16:02	TNM			
GC/MS Volatiles								
GC/MS VOCs 5035/8260 low level	Method: EPA 8260							
Acetone	ND	ug/kg	85000	05/25/06 22:36	DLK	67-64-1		
Benzene	ND	ug/kg	4300	05/25/06 22:36	DLK	71-43-2		
Bromobenzene	ND	ug/kg	4300	05/25/06 22:36	DLK	108-86-1		
Bromochloromethane	ND	ug/kg	4300	05/25/06 22:36	DLK	74-97-5		
Bromodichloromethane	ND	ug/kg	4300	05/25/06 22:36	DLK	75-27-4		
Bromoform	ND	ug/kg	4300	05/25/06 22:36	DLK	75-25-2		
Bromomethane	ND	ug/kg	8500	05/25/06 22:36	DLK	74-83-9		
2-Butanone (MEK)	ND	ug/kg	85000	05/25/06 22:36	DLK	78-93-3		
n-Butylbenzene	ND	ug/kg	4300	05/25/06 22:36	DLK	104-51-8		
sec-Butylbenzene	ND	ug/kg	4300	05/25/06 22:36	DLK	135-98-8		
tert-Butylbenzene	ND	ug/kg	4300	05/25/06 22:36	DLK	98-06-6		
Carbon tetrachloride	ND	ug/kg	4300	05/25/06 22:36	DLK	56-23-5		
Chlorobenzene	ND	ug/kg	4300	05/25/06 22:36	DLK	108-90-7		
Chloroethane	ND	ug/kg	8500	05/25/06 22:36	DLK	75-00-3		
Chloroform	ND	ug/kg	4300	05/25/06 22:36	DLK	67-66-3		
Chloromethane	ND	ug/kg	8500	05/25/06 22:36	DLK	74-87-3		
2-Chlorotoluene	ND	ug/kg	4300	05/25/06 22:36	DLK	95-49-8		
4-Chlorotoluene	ND	ug/kg	4300	05/25/06 22:36	DLK	106-43-4		
1,2-Dibromo-3-chloropropane	ND	ug/kg	4300	05/25/06 22:36	DLK	96-12-8		
Dibromochloromethane	ND	ug/kg	4300	05/25/06 22:36	DLK	124-48-1		
1,2-Dibromoethane (EDB)	ND	ug/kg	4300	05/25/06 22:36	DLK	106-93-4		
Dibromomethane	ND	ug/kg	4300	05/25/06 22:36	DLK	74-95-3		
1,2-Dichlorobenzene	ND	ug/kg	4300	05/25/06 22:36	DLK	95-50-1		
1,3-Dichlorobenzene	ND	ug/kg	4300	05/25/06 22:36	DLK	541-73-1		
1,4-Dichlorobenzene	ND	ug/kg	4300	05/25/06 22:36	DLK	106-46-7		
Dichlorodifluoromethane	ND	ug/kg	8500	05/25/06 22:36	DLK	75-71-8		
1,1-Dichloroethane	ND	ug/kg	4300	05/25/06 22:36	DLK	75-34-3		
1,2-Dichloroethane	ND	ug/kg	4300	05/25/06 22:36	DLK	107-06-2		
1,1-Dichloroethene	ND	ug/kg	4300	05/25/06 22:36	DLK	75-35-4		
cis-1,2-Dichloroethene	ND	ug/kg	4300	05/25/06 22:36	DLK	156-59-2		
trans-1,2-Dichloroethene	ND	ug/kg	4300	05/25/06 22:36	DLK	156-60-5		
1,2-Dichloropropane	ND	ug/kg	4300	05/25/06 22:36	DLK	78-87-5		
1,3-Dichloropropane	ND	ug/kg	4300	05/25/06 22:36	DLK	142-28-9		

Pace Analytical®
www.pacelabs.com

Pace Analytical Services, Inc.
9800 Kincey Avenue, Suite 100
Huntersville, NC 28078
Phone: 704.875.9092
Fax: 704.875.9091

Pace Analytical Services, Inc.
2225 Riverside Drive
Asheville, NC 28804
Phone: 828.254.7176
Fax: 828.252.4618

Lab Project Number: 92119722
Client Project ID: Affinia-Wix/41284

Lab Sample No: 927002055 Project Sample Number: 92119722-011 Date Collected: 05/17/06 15:30
Client Sample ID: STB-8 (6-8) Matrix: Soil Date Received: 05/19/06 09:30

Parameters	Results	Units	Report Limit	Analyzed	By	CAS No.	Qual	RegLmt
2,2-Dichloropropane	ND	ug/kg	4300	05/25/06 22:36	DLK	594-20-7		
1,1-Dichloropropene	ND	ug/kg	4300	05/25/06 22:36	DLK	563-58-6		
cis-1,3-Dichloropropene	ND	ug/kg	4300	05/25/06 22:36	DLK	10061-01-5		
trans-1,3-Dichloropropene	ND	ug/kg	4300	05/25/06 22:36	DLK	10061-02-6		
Diisopropyl ether	ND	ug/kg	4300	05/25/06 22:36	DLK	108-20-3		
Ethylbenzene	ND	ug/kg	4300	05/25/06 22:36	DLK	100-41-4		
Hexachloro-1,3-butadiene	ND	ug/kg	4300	05/25/06 22:36	DLK	87-68-3		
2-Hexanone	ND	ug/kg	43000	05/25/06 22:36	DLK	591-78-6		
Isopropylbenzene (Cumene)	ND	ug/kg	4300	05/25/06 22:36	DLK	98-82-8		
p-Isopropyltoluene	ND	ug/kg	4300	05/25/06 22:36	DLK	99-87-6		
Methylene chloride	ND	ug/kg	4300	05/25/06 22:36	DLK	75-09-2		
4-Methyl-2-pentanone (MIBK)	ND	ug/kg	43000	05/25/06 22:36	DLK	108-10-1		
Methyl-tert-butyl ether	ND	ug/kg	4300	05/25/06 22:36	DLK	1634-04-4		
Naphthalene	ND	ug/kg	4300	05/25/06 22:36	DLK	91-20-3		
n-Propylbenzene	ND	ug/kg	4300	05/25/06 22:36	DLK	103-65-1		
Styrene	ND	ug/kg	4300	05/25/06 22:36	DLK	100-42-5		
1,1,1,2-Tetrachloroethane	ND	ug/kg	4300	05/25/06 22:36	DLK	630-20-6		
1,1,2,2-Tetrachloroethane	ND	ug/kg	4300	05/25/06 22:36	DLK	79-34-5		
Tetrachloroethene	ND	ug/kg	4300	05/25/06 22:36	DLK	127-18-4		
Toluene	2000000	ug/kg	21000	05/25/06 22:36	DLK	108-88-3	4	
1,2,3-Trichlorobenzene	ND	ug/kg	4300	05/25/06 22:36	DLK	87-61-6		
1,2,4-Trichlorobenzene	ND	ug/kg	4300	05/25/06 22:36	DLK	120-82-1		
1,1,1-Trichloroethane	ND	ug/kg	4300	05/25/06 22:36	DLK	71-55-6		
1,1,2-Trichloroethane	ND	ug/kg	4300	05/25/06 22:36	DLK	79-00-5		
Trichloroethene	ND	ug/kg	4300	05/25/06 22:36	DLK	79-01-6		
Trichlorofluoromethane	ND	ug/kg	4300	05/25/06 22:36	DLK	75-69-4		
1,2,3-Trichloropropane	ND	ug/kg	4300	05/25/06 22:36	DLK	96-18-4		
1,2,4-Trimethylbenzene	ND	ug/kg	4300	05/25/06 22:36	DLK	95-63-6		
1,3,5-Trimethylbenzene	ND	ug/kg	4300	05/25/06 22:36	DLK	108-67-8		
Vinyl acetate	ND	ug/kg	43000	05/25/06 22:36	DLK	108-05-4		
Vinyl chloride	ND	ug/kg	8500	05/25/06 22:36	DLK	75-01-4		
Xylene (Total)	6000	ug/kg	4.3	05/25/06 22:36	DLK	1330-20-7		
m&p-Xylene	ND	ug/kg	8500	05/25/06 22:36	DLK			
o-Xylene	4700	ug/kg	4300	05/25/06 22:36	DLK	95-47-6		
Toluene-d8 (S)	99	%		05/25/06 22:36	DLK	2037-26-5		
4-Bromofluorobenzene (S)	93	%		05/25/06 22:36	DLK	460-00-4		
Dibromofluoromethane (S)	95	%		05/25/06 22:36	DLK	1868-53-7		
1,2-Dichloroethane-d4 (S)	96	%		05/25/06 22:36	DLK	17060-07-0		

Pace Analytical®
www.pacelabs.com

Pace Analytical Services, Inc.
9800 Kincey Avenue, Suite 100
Huntersville, NC 28078
Phone: 704.875.9092
Fax: 704.875.9091

Pace Analytical Services, Inc.
2225 Riverside Drive
Asheville, NC 28804
Phone: 828.254.7176
Fax: 828.252.4618

Lab Project Number: 92119722
Client Project ID: Affinia-Wix/41284

Lab Sample No: 927002063 | Project Sample Number: 92119722-012 | Date Collected: 05/17/06 12:00
Client Sample ID: STB-DUP | Matrix: Soil | Date Received: 05/19/06 09:30

Parameters	Results	Units	Report Limit	Analyzed	By	CAS No.	Qual	RegLmt
Wet Chemistry								
Percent Moisture	Method: % Moisture							
Percent Moisture	15.6	%		05/19/06 16:02	TNM			
GC/MS Volatiles								
GC/MS VOCs 5035/8260 low level	Method: EPA 8260							
Acetone	ND	ug/kg	84000	05/25/06 22:54	DLK	67-64-1		
Benzene	ND	ug/kg	4200	05/25/06 22:54	DLK	71-43-2		
Bromobenzene	ND	ug/kg	4200	05/25/06 22:54	DLK	108-86-1		
Bromochloromethane	ND	ug/kg	4200	05/25/06 22:54	DLK	74-97-5		
Bromodichloromethane	ND	ug/kg	4200	05/25/06 22:54	DLK	75-27-4		
Bromoform	ND	ug/kg	4200	05/25/06 22:54	DLK	75-25-2		
Bromomethane	ND	ug/kg	8400	05/25/06 22:54	DLK	74-83-9		
2-Butanone (MEK)	ND	ug/kg	84000	05/25/06 22:54	DLK	78-93-3		
n-Butylbenzene	ND	ug/kg	4200	05/25/06 22:54	DLK	104-51-8		
sec-Butylbenzene	ND	ug/kg	4200	05/25/06 22:54	DLK	135-98-8		
tert-Butylbenzene	ND	ug/kg	4200	05/25/06 22:54	DLK	98-06-6		
Carbon tetrachloride	ND	ug/kg	4200	05/25/06 22:54	DLK	56-23-5		
Chlorobenzene	ND	ug/kg	4200	05/25/06 22:54	DLK	108-90-7		
Chloroethane	ND	ug/kg	8400	05/25/06 22:54	DLK	75-00-3		
Chloroform	ND	ug/kg	4200	05/25/06 22:54	DLK	67-66-3		
Chloromethane	ND	ug/kg	8400	05/25/06 22:54	DLK	74-87-3		
2-Chlorotoluene	ND	ug/kg	4200	05/25/06 22:54	DLK	95-49-8		
4-Chlorotoluene	ND	ug/kg	4200	05/25/06 22:54	DLK	106-43-4		
1,2-Dibromo-3-chloropropane	ND	ug/kg	4200	05/25/06 22:54	DLK	96-12-8		
Dibromochloromethane	ND	ug/kg	4200	05/25/06 22:54	DLK	124-48-1		
1,2-Dibromoethane (EDB)	ND	ug/kg	4200	05/25/06 22:54	DLK	106-93-4		
Dibromomethane	ND	ug/kg	4200	05/25/06 22:54	DLK	74-95-3		
1,2-Dichlorobenzene	ND	ug/kg	4200	05/25/06 22:54	DLK	95-50-1		
1,3-Dichlorobenzene	ND	ug/kg	4200	05/25/06 22:54	DLK	541-73-1		
1,4-Dichlorobenzene	ND	ug/kg	4200	05/25/06 22:54	DLK	106-46-7		
Dichlorodifluoromethane	ND	ug/kg	8400	05/25/06 22:54	DLK	75-71-8		
1,1-Dichloroethane	ND	ug/kg	4200	05/25/06 22:54	DLK	75-34-3		
1,2-Dichloroethane	ND	ug/kg	4200	05/25/06 22:54	DLK	107-06-2		
1,1-Dichloroethene	ND	ug/kg	4200	05/25/06 22:54	DLK	75-35-4		
cis-1,2-Dichloroethene	ND	ug/kg	4200	05/25/06 22:54	DLK	156-59-2		
trans-1,2-Dichloroethene	ND	ug/kg	4200	05/25/06 22:54	DLK	156-60-5		
1,2-Dichloropropane	ND	ug/kg	4200	05/25/06 22:54	DLK	78-87-5		
1,3-Dichloropropane	ND	ug/kg	4200	05/25/06 22:54	DLK	142-28-9		

Pace Analytical®
www.pacelabs.com

Pace Analytical Services, Inc.
9800 Kincey Avenue, Suite 100
Huntersville, NC 28078
Phone: 704.875.9092
Fax: 704.875.9091

Pace Analytical Services, Inc.
2225 Riverside Drive
Asheville, NC 28804
Phone: 828.254.7176
Fax: 828.252.4618

Lab Project Number: 92119722
Client Project ID: Affinia-Wix/41284

Lab Sample No: 927002063 | Project Sample Number: 92119722-012 | Date Collected: 05/17/06 12:00
Client Sample ID: STB-DUP | Matrix: Soil | Date Received: 05/19/06 09:30

Parameters	Results	Units	Report Limit	Analyzed	By	CAS No.	Qual	RegLmt
2,2-Dichloropropane	ND	ug/kg	4200	05/25/06 22:54	DLK	594-20-7		
1,1-Dichloropropene	ND	ug/kg	4200	05/25/06 22:54	DLK	563-58-6		
cis-1,3-Dichloropropene	ND	ug/kg	4200	05/25/06 22:54	DLK	10061-01-5		
trans-1,3-Dichloropropene	ND	ug/kg	4200	05/25/06 22:54	DLK	10061-02-6		
Diisopropyl ether	ND	ug/kg	4200	05/25/06 22:54	DLK	108-20-3		
Ethylbenzene	ND	ug/kg	4200	05/25/06 22:54	DLK	100-41-4		
Hexachloro-1,3-butadiene	ND	ug/kg	4200	05/25/06 22:54	DLK	87-68-3		
2-Hexanone	ND	ug/kg	42000	05/25/06 22:54	DLK	591-78-6		
Isopropylbenzene (Cumene)	ND	ug/kg	4200	05/25/06 22:54	DLK	98-82-8		
p-Isopropyltoluene	ND	ug/kg	4200	05/25/06 22:54	DLK	99-87-6		
Methylene chloride	ND	ug/kg	4200	05/25/06 22:54	DLK	75-09-2		
4-Methyl-2-pentanone (MIBK)	ND	ug/kg	42000	05/25/06 22:54	DLK	108-10-1		
Methyl-tert-butyl ether	ND	ug/kg	4200	05/25/06 22:54	DLK	1634-04-4		
Naphthalene	ND	ug/kg	4200	05/25/06 22:54	DLK	91-20-3		
n-Propylbenzene	ND	ug/kg	4200	05/25/06 22:54	DLK	103-65-1		
Styrene	ND	ug/kg	4200	05/25/06 22:54	DLK	100-42-5		
1,1,1,2-Tetrachloroethane	ND	ug/kg	4200	05/25/06 22:54	DLK	630-20-6		
1,1,2,2-Tetrachloroethane	ND	ug/kg	4200	05/25/06 22:54	DLK	79-34-5		
Tetrachloroethene	ND	ug/kg	4200	05/25/06 22:54	DLK	127-18-4		
Toluene	1700000	ug/kg	21000	05/25/06 22:54	DLK	108-88-3	4	
1,2,3-Trichlorobenzene	ND	ug/kg	4200	05/25/06 22:54	DLK	87-61-6		
1,2,4-Trichlorobenzene	ND	ug/kg	4200	05/25/06 22:54	DLK	120-82-1		
1,1,1-Trichloroethane	ND	ug/kg	4200	05/25/06 22:54	DLK	71-55-6		
1,1,2-Trichloroethane	ND	ug/kg	4200	05/25/06 22:54	DLK	79-00-5		
Trichloroethene	ND	ug/kg	4200	05/25/06 22:54	DLK	79-01-6		
Trichlorofluoromethane	ND	ug/kg	4200	05/25/06 22:54	DLK	75-69-4		
1,2,3-Trichloropropane	ND	ug/kg	4200	05/25/06 22:54	DLK	96-18-4		
1,2,4-Trimethylbenzene	ND	ug/kg	4200	05/25/06 22:54	DLK	95-63-6		
1,3,5-Trimethylbenzene	ND	ug/kg	4200	05/25/06 22:54	DLK	108-67-8		
Vinyl acetate	ND	ug/kg	42000	05/25/06 22:54	DLK	108-05-4		
Vinyl chloride	ND	ug/kg	8400	05/25/06 22:54	DLK	75-01-4		
Xylene (Total)	4400	ug/kg	4.2	05/25/06 22:54	DLK	1330-20-7		
m&p-Xylene	ND	ug/kg	8400	05/25/06 22:54	DLK			
o-Xylene	4400	ug/kg	4200	05/25/06 22:54	DLK	95-47-6		
Toluene-d8 (S)	101	%		05/25/06 22:54	DLK	2037-26-5		
4-Bromofluorobenzene (S)	95	%		05/25/06 22:54	DLK	460-00-4		
Dibromofluoromethane (S)	92	%		05/25/06 22:54	DLK	1868-53-7		
1,2-Dichloroethane-d4 (S)	98	%		05/25/06 22:54	DLK	17060-07-0		

Pace Analytical®
www.pacelabs.com

Pace Analytical Services, Inc.
9800 Kincey Avenue, Suite 100
Huntersville, NC 28078
Phone: 704.875.9092
Fax: 704.875.9091

Pace Analytical Services, Inc.
2225 Riverside Drive
Asheville, NC 28804
Phone: 828.254.7176
Fax: 828.252.4618

Lab Project Number: 92119722
Client Project ID: Affinia-Wix/41284

Lab Sample No: 927002071 | Project Sample Number: 92119722-013 | Date Collected: 05/16/06 10:35
Client Sample ID: STB-1(4-6) | Matrix: Soil | Date Received: 05/19/06 09:30

Parameters	Results	Units	Report Limit	Analyzed	By	CAS No.	Qual	RegLmt
Wet Chemistry								
Percent Moisture	Method: % Moisture							
Percent Moisture	8.1	%		05/19/06 16:00	TNM			
GC/MS Volatiles								
GC/MS VOCs 5035/8260 low level	Method: EPA 8260							
Acetone	ND	ug/kg	22000	05/22/06 21:24	DLK	67-64-1		
Benzene	ND	ug/kg	1100	05/22/06 21:24	DLK	71-43-2		
Bromobenzene	ND	ug/kg	1100	05/22/06 21:24	DLK	108-86-1		
Bromochloromethane	ND	ug/kg	1100	05/22/06 21:24	DLK	74-97-5		
Bromodichloromethane	ND	ug/kg	1100	05/22/06 21:24	DLK	75-27-4		
Bromoform	ND	ug/kg	1100	05/22/06 21:24	DLK	75-25-2		
Bromomethane	ND	ug/kg	2200	05/22/06 21:24	DLK	74-83-9		
2-Butanone (MEK)	ND	ug/kg	22000	05/22/06 21:24	DLK	78-93-3		
n-Butylbenzene	ND	ug/kg	1100	05/22/06 21:24	DLK	104-51-8		
sec-Butylbenzene	ND	ug/kg	1100	05/22/06 21:24	DLK	135-98-8		
tert-Butylbenzene	ND	ug/kg	1100	05/22/06 21:24	DLK	98-06-6		
Carbon tetrachloride	ND	ug/kg	1100	05/22/06 21:24	DLK	56-23-5		
Chlorobenzene	ND	ug/kg	1100	05/22/06 21:24	DLK	108-90-7		
Chloroethane	ND	ug/kg	2200	05/22/06 21:24	DLK	75-00-3		
Chloroform	ND	ug/kg	1100	05/22/06 21:24	DLK	67-66-3		
Chloromethane	ND	ug/kg	2200	05/22/06 21:24	DLK	74-87-3		
2-Chlorotoluene	ND	ug/kg	1100	05/22/06 21:24	DLK	95-49-8		
4-Chlorotoluene	ND	ug/kg	1100	05/22/06 21:24	DLK	106-43-4		
1,2-Dibromo-3-chloropropane	ND	ug/kg	1100	05/22/06 21:24	DLK	96-12-8		
Dibromochloromethane	ND	ug/kg	1100	05/22/06 21:24	DLK	124-48-1		
1,2-Dibromoethane (EDB)	ND	ug/kg	1100	05/22/06 21:24	DLK	106-93-4		
Dibromomethane	ND	ug/kg	1100	05/22/06 21:24	DLK	74-95-3		
1,2-Dichlorobenzene	ND	ug/kg	1100	05/22/06 21:24	DLK	95-50-1		
1,3-Dichlorobenzene	ND	ug/kg	1100	05/22/06 21:24	DLK	541-73-1		
1,4-Dichlorobenzene	ND	ug/kg	1100	05/22/06 21:24	DLK	106-46-7		
Dichlorodifluoromethane	ND	ug/kg	2200	05/22/06 21:24	DLK	75-71-8		
1,1-Dichloroethane	ND	ug/kg	1100	05/22/06 21:24	DLK	75-34-3		
1,2-Dichloroethane	ND	ug/kg	1100	05/22/06 21:24	DLK	107-06-2		
1,1-Dichloroethene	ND	ug/kg	1100	05/22/06 21:24	DLK	75-35-4		
cis-1,2-Dichloroethene	ND	ug/kg	1100	05/22/06 21:24	DLK	156-59-2		
trans-1,2-Dichloroethene	ND	ug/kg	1100	05/22/06 21:24	DLK	156-60-5		
1,2-Dichloropropane	ND	ug/kg	1100	05/22/06 21:24	DLK	78-87-5		
1,3-Dichloropropane	ND	ug/kg	1100	05/22/06 21:24	DLK	142-28-9		

Pace Analytical®
www.pacelabs.com

Pace Analytical Services, Inc.
9800 Kincey Avenue, Suite 100
Huntersville, NC 28078
Phone: 704.875.9092
Fax: 704.875.9091

Pace Analytical Services, Inc.
2225 Riverside Drive
Asheville, NC 28804
Phone: 828.254.7176
Fax: 828.252.4618

Lab Project Number: 92119722
Client Project ID: Affinia-Wix/41284

Lab Sample No: 927002071 Project Sample Number: 92119722-013 Date Collected: 05/16/06 10:35
Client Sample ID: STB-1(4-6) Matrix: Soil Date Received: 05/19/06 09:30

Parameters	Results	Units	Report Limit	Analyzed	By	CAS No.	Qual	RegLmt
2,2-Dichloropropane	ND	ug/kg	1100	05/22/06 21:24	DLK	594-20-7		
1,1-Dichloropropene	ND	ug/kg	1100	05/22/06 21:24	DLK	563-58-6		
cis-1,3-Dichloropropene	ND	ug/kg	1100	05/22/06 21:24	DLK	10061-01-5		
trans-1,3-Dichloropropene	ND	ug/kg	1100	05/22/06 21:24	DLK	10061-02-6		
Diisopropyl ether	ND	ug/kg	1100	05/22/06 21:24	DLK	108-20-3		
Ethylbenzene	ND	ug/kg	1100	05/22/06 21:24	DLK	100-41-4		
Hexachloro-1,3-butadiene	ND	ug/kg	1100	05/22/06 21:24	DLK	87-68-3		
2-Hexanone	ND	ug/kg	11000	05/22/06 21:24	DLK	591-78-6		
Isopropylbenzene (Cumene)	ND	ug/kg	1100	05/22/06 21:24	DLK	98-82-8		
p-Isopropyltoluene	ND	ug/kg	1100	05/22/06 21:24	DLK	99-87-6		
Methylene chloride	ND	ug/kg	1100	05/22/06 21:24	DLK	75-09-2		
4-Methyl-2-pentanone (MIBK)	ND	ug/kg	11000	05/22/06 21:24	DLK	108-10-1		
Methyl-tert-butyl ether	ND	ug/kg	1100	05/22/06 21:24	DLK	1634-04-4		
Naphthalene	1100	ug/kg	1100	05/22/06 21:24	DLK	91-20-3		
n-Propylbenzene	ND	ug/kg	1100	05/22/06 21:24	DLK	103-65-1		
Styrene	ND	ug/kg	1100	05/22/06 21:24	DLK	100-42-5		
1,1,1,2-Tetrachloroethane	ND	ug/kg	1100	05/22/06 21:24	DLK	630-20-6		
1,1,2,2-Tetrachloroethane	ND	ug/kg	1100	05/22/06 21:24	DLK	79-34-5		
Tetrachloroethene	ND	ug/kg	1100	05/22/06 21:24	DLK	127-18-4		
Toluene	410000	ug/kg	22000	05/22/06 21:24	DLK	108-88-3		
1,2,3-Trichlorobenzene	ND	ug/kg	1100	05/22/06 21:24	DLK	87-61-6		
1,2,4-Trichlorobenzene	ND	ug/kg	1100	05/22/06 21:24	DLK	120-82-1		
1,1,1-Trichloroethane	ND	ug/kg	1100	05/22/06 21:24	DLK	71-55-6		
1,1,2-Trichloroethane	ND	ug/kg	1100	05/22/06 21:24	DLK	79-00-5		
Trichloroethene	ND	ug/kg	1100	05/22/06 21:24	DLK	79-01-6		
Trichlorofluoromethane	ND	ug/kg	1100	05/22/06 21:24	DLK	75-69-4		
1,2,3-Trichloropropane	ND	ug/kg	1100	05/22/06 21:24	DLK	96-18-4		
1,2,4-Trimethylbenzene	4000	ug/kg	1100	05/22/06 21:24	DLK	95-63-6		
1,3,5-Trimethylbenzene	1300	ug/kg	1100	05/22/06 21:24	DLK	108-67-8		
Vinyl acetate	ND	ug/kg	11000	05/22/06 21:24	DLK	108-05-4		
Vinyl chloride	ND	ug/kg	2200	05/22/06 21:24	DLK	75-01-4		
Xylene (Total)	2100	ug/kg	4.4	05/22/06 21:24	DLK	1330-20-7		
m&p-Xylene	ND	ug/kg	2200	05/22/06 21:24	DLK			
o-Xylene	ND	ug/kg	1100	05/22/06 21:24	DLK	95-47-6		
Toluene-d8 (S)	99	%		05/22/06 21:24	DLK	2037-26-5		
4-Bromofluorobenzene (S)	93	%		05/22/06 21:24	DLK	460-00-4		
Dibromofluoromethane (S)	91	%		05/22/06 21:24	DLK	1868-53-7		
1,2-Dichloroethane-d4 (S)	92	%		05/22/06 21:24	DLK	17060-07-0		

Pace Analytical®
www.pacelabs.com

Pace Analytical Services, Inc.
9800 Kincey Avenue, Suite 100
Huntersville, NC 28078
Phone: 704.875.9092
Fax: 704.875.9091

Pace Analytical Services, Inc.
2225 Riverside Drive
Asheville, NC 28804
Phone: 828.254.7176
Fax: 828.252.4618

Lab Project Number: 92119722
Client Project ID: Affinia-Wix/41284

PARAMETER FOOTNOTES

Method 9071B modified to use ASE.

All pH, Free Chlorine, Total Chlorine and Ferrous Iron analyses conducted outside of EPA recommended immediate hold time.

Depending on the moisture content the PRLs can be elevated for all soil samples reported on a dry weight basis.

2-Chloroethyl vinyl ether has been shown to degrade in the presence of acid.

ND	Not detected at or above adjusted reporting limit
NC	Not Calculable
J	Estimated concentration above the adjusted method detection limit and below the adjusted reporting limit
MDL	Adjusted Method Detection Limit
(S)	Surrogate
[1]	Sample re-analysis confirmed the sample is not homogeneous.
[2]	Low surrogate recovery was confirmed as a matrix effect by a second analysis.
[3]	The reported result may be biased high due to matrix interference with the internal standard. This was confirmed by reanalysis of the sample.
[4]	Compound concentration exceeds the calibration range of the instrument (CLP E-Flag).

Pace Analytical®
www.pacelabs.com

Pace Analytical Services, Inc.
9800 Kincey Avenue, Suite 100
Huntersville, NC 28078
Phone: 704.875.9092
Fax: 704.875.9091

Pace Analytical Services, Inc.
2225 Riverside Drive
Asheville, NC 28804
Phone: 828.254.7176
Fax: 828.252.4618

QUALITY CONTROL DATA

Lab Project Number: 92119722
Client Project ID: Affinia-Wix/41284

QC Batch: 157836 Analysis Method: EPA 8260
QC Batch Method: EPA 8260 Analysis Description: GC/MS VOCs 5035/8260 low level
Associated Lab Samples: 927002022 927002030 927002048 927002071

METHOD BLANK: 927008474
Associated Lab Samples: 927002022 927002030 927002048 927002071

Parameter	Units	Blank Result	Reporting Limit	Footnotes
Acetone	ug/kg	ND	100	
Benzene	ug/kg	ND	5.0	
Bromobenzene	ug/kg	ND	5.0	
Bromochloromethane	ug/kg	ND	5.0	
Bromodichloromethane	ug/kg	ND	5.0	
Bromoform	ug/kg	ND	5.0	
Bromomethane	ug/kg	ND	10.	
2-Butanone (MEK)	ug/kg	ND	100	
n-Butylbenzene	ug/kg	ND	5.0	
sec-Butylbenzene	ug/kg	ND	5.0	
tert-Butylbenzene	ug/kg	ND	5.0	
Carbon tetrachloride	ug/kg	ND	5.0	
Chlorobenzene	ug/kg	ND	5.0	
Chloroethane	ug/kg	ND	10.	
Chloroform	ug/kg	ND	5.0	
Chloromethane	ug/kg	ND	10.	
2-Chlorotoluene	ug/kg	ND	5.0	
4-Chlorotoluene	ug/kg	ND	5.0	
1,2-Dibromo-3-chloropropane	ug/kg	ND	5.0	
Dibromochloromethane	ug/kg	ND	5.0	
1,2-Dibromoethane (EDB)	ug/kg	ND	5.0	
Dibromomethane	ug/kg	ND	5.0	
1,2-Dichlorobenzene	ug/kg	ND	5.0	
1,3-Dichlorobenzene	ug/kg	ND	5.0	
1,4-Dichlorobenzene	ug/kg	ND	5.0	
Dichlorodifluoromethane	ug/kg	ND	10.	
1,1-Dichloroethane	ug/kg	ND	5.0	
1,2-Dichloroethane	ug/kg	ND	5.0	
1,1-Dichloroethene	ug/kg	ND	5.0	
cis-1,2-Dichloroethene	ug/kg	ND	5.0	
trans-1,2-Dichloroethene	ug/kg	ND	5.0	

Pace Analytical®
www.pacelabs.com

Pace Analytical Services, Inc.
9800 Kincey Avenue, Suite 100
Huntersville, NC 28078
Phone: 704.875.9092
Fax: 704.875.9091

Pace Analytical Services, Inc.
2225 Riverside Drive
Asheville, NC 28804
Phone: 828.254.7176
Fax: 828.252.4618

QUALITY CONTROL DATA

Lab Project Number: 92119722
Client Project ID: Affinia-Wix/41284

METHOD BLANK: 927008474
Associated Lab Samples: 927002022 927002030 927002048 927002071

Parameter	Units	Blank Result	Reporting Limit	Footnotes
1,2-Dichloropropane	ug/kg	ND	5.0	
1,3-Dichloropropane	ug/kg	ND	5.0	
2,2-Dichloropropane	ug/kg	ND	5.0	
1,1-Dichloropropene	ug/kg	ND	5.0	
cis-1,3-Dichloropropene	ug/kg	ND	5.0	
trans-1,3-Dichloropropene	ug/kg	ND	5.0	
Diisopropyl ether	ug/kg	ND	5.0	
Ethylbenzene	ug/kg	ND	5.0	
Hexachloro-1,3-butadiene	ug/kg	ND	5.0	
2-Hexanone	ug/kg	ND	50.	
Isopropylbenzene (Cumene)	ug/kg	ND	5.0	
p-Isopropyltoluene	ug/kg	ND	5.0	
Methylene chloride	ug/kg	ND	5.0	
4-Methyl-2-pentanone (MIBK)	ug/kg	ND	50.	
Methyl-tert-butyl ether	ug/kg	ND	5.0	
Naphthalene	ug/kg	ND	5.0	
n-Propylbenzene	ug/kg	ND	5.0	
Styrene	ug/kg	ND	5.0	
1,1,1,2-Tetrachloroethane	ug/kg	ND	5.0	
1,1,2,2-Tetrachloroethane	ug/kg	ND	5.0	
Tetrachloroethene	ug/kg	ND	5.0	
Toluene	ug/kg	ND	5.0	
1,2,3-Trichlorobenzene	ug/kg	ND	5.0	
1,2,4-Trichlorobenzene	ug/kg	ND	5.0	
1,1,1-Trichloroethane	ug/kg	ND	5.0	
1,1,2-Trichloroethane	ug/kg	ND	5.0	
Trichloroethene	ug/kg	ND	5.0	
Trichlorofluoromethane	ug/kg	ND	5.0	
1,2,3-Trichloropropane	ug/kg	ND	5.0	
1,2,4-Trimethylbenzene	ug/kg	ND	5.0	
1,3,5-Trimethylbenzene	ug/kg	ND	5.0	
Vinyl acetate	ug/kg	ND	50.	
Vinyl chloride	ug/kg	ND	10.	
Xylene (Total)	ug/kg	ND	5.0	
m&p-Xylene	ug/kg	ND	10.	
o-Xylene	ug/kg	ND	5.0	

Pace Analytical®
www.pacelabs.com

Pace Analytical Services, Inc.
9800 Kincey Avenue, Suite 100
Huntersville, NC 28078
Phone: 704.875.9092
Fax: 704.875.9091

Pace Analytical Services, Inc.
2225 Riverside Drive
Asheville, NC 28804
Phone: 828.254.7176
Fax: 828.252.4618

QUALITY CONTROL DATA

Lab Project Number: 92119722
Client Project ID: Affinia-Wix/41284

METHOD BLANK: 927008474
Associated Lab Samples: 927002022 927002030 927002048 927002071

Parameter	Units	Blank Result	Reporting Limit	Footnotes
Toluene-d8 (S)	%	99		
4-Bromofluorobenzene (S)	%	99		
Dibromofluoromethane (S)	%	99		
1,2-Dichloroethane-d4 (S)	%	103		

LABORATORY CONTROL SAMPLE: 927008482

Parameter	Units	Spike Conc.	LCS Result	LCS % Rec	Footnotes
Acetone	ug/kg	100.00	130.7	131	
Benzene	ug/kg	50.00	54.28	109	
Bromobenzene	ug/kg	50.00	58.42	117	
Bromochloromethane	ug/kg	50.00	56.22	112	
Bromodichloromethane	ug/kg	50.00	51.45	103	
Bromoform	ug/kg	50.00	52.39	105	
Bromomethane	ug/kg	50.00	46.81	94	
2-Butanone (MEK)	ug/kg	100.00	116.1	116	
n-Butylbenzene	ug/kg	50.00	50.51	101	
sec-Butylbenzene	ug/kg	50.00	50.76	102	
tert-Butylbenzene	ug/kg	50.00	54.14	108	
Carbon tetrachloride	ug/kg	50.00	48.07	96	
Chlorobenzene	ug/kg	50.00	53.97	108	
Chloroethane	ug/kg	50.00	47.45	95	
Chloroform	ug/kg	50.00	52.26	105	
Chloromethane	ug/kg	50.00	43.02	86	
2-Chlorotoluene	ug/kg	50.00	54.03	108	
4-Chlorotoluene	ug/kg	50.00	55.17	110	
1,2-Dibromo-3-chloropropane	ug/kg	50.00	63.07	126	
Dibromochloromethane	ug/kg	50.00	53.09	106	
1,2-Dibromoethane (EDB)	ug/kg	50.00	55.80	112	
Dibromomethane	ug/kg	50.00	53.82	108	
1,2-Dichlorobenzene	ug/kg	50.00	59.15	118	
1,3-Dichlorobenzene	ug/kg	50.00	56.88	114	
1,4-Dichlorobenzene	ug/kg	50.00	54.90	110	
Dichlorodifluoromethane	ug/kg	50.00	38.54	77	

Pace Analytical®
www.pacelabs.com

Pace Analytical Services, Inc.
9800 Kincey Avenue, Suite 100
Huntersville, NC 28078
Phone: 704.875.9092
Fax: 704.875.9091

Pace Analytical Services, Inc.
2225 Riverside Drive
Asheville, NC 28804
Phone: 828.254.7176
Fax: 828.252.4618

QUALITY CONTROL DATA

Lab Project Number: 92119722
Client Project ID: Affinia-Wix/41284

LABORATORY CONTROL SAMPLE: 927008482

Parameter	Units	Spike Conc.	LCS Result	LCS % Rec	Footnotes
1,1-Dichloroethane	ug/kg	50.00	51.23	102	
1,2-Dichloroethane	ug/kg	50.00	52.54	105	
1,1-Dichloroethene	ug/kg	50.00	48.62	97	
cis-1,2-Dichloroethene	ug/kg	50.00	51.99	104	
trans-1,2-Dichloroethene	ug/kg	50.00	51.64	103	
1,2-Dichloropropane	ug/kg	50.00	49.01	98	
1,3-Dichloropropane	ug/kg	50.00	53.52	107	
2,2-Dichloropropane	ug/kg	50.00	53.92	108	
1,1-Dichloropropene	ug/kg	50.00	48.78	98	
cis-1,3-Dichloropropene	ug/kg	50.00	52.32	105	
trans-1,3-Dichloropropene	ug/kg	50.00	49.37	99	
Diisopropyl ether	ug/kg	50.00	50.56	101	
Ethylbenzene	ug/kg	50.00	53.98	108	
Hexachloro-1,3-butadiene	ug/kg	50.00	58.79	118	
2-Hexanone	ug/kg	100.00	83.22	83	
Isopropylbenzene (Cumene)	ug/kg	50.00	52.48	105	
p-Isopropyltoluene	ug/kg	50.00	49.03	98	
Methylene chloride	ug/kg	50.00	49.64	99	
4-Methyl-2-pentanone (MIBK)	ug/kg	100.00	127.2	127	
Methyl-tert-butyl ether	ug/kg	50.00	55.50	111	
Naphthalene	ug/kg	50.00	54.94	110	
n-Propylbenzene	ug/kg	50.00	54.03	108	
Styrene	ug/kg	50.00	50.23	100	
1,1,1,2-Tetrachloroethane	ug/kg	50.00	55.21	110	
1,1,2,2-Tetrachloroethane	ug/kg	50.00	55.62	111	
Tetrachloroethene	ug/kg	50.00	47.56	95	
Toluene	ug/kg	50.00	50.99	102	
1,2,3-Trichlorobenzene	ug/kg	50.00	58.68	117	
1,2,4-Trichlorobenzene	ug/kg	50.00	64.55	129	
1,1,1-Trichloroethane	ug/kg	50.00	47.19	94	
1,1,2-Trichloroethane	ug/kg	50.00	52.59	105	
Trichloroethene	ug/kg	50.00	52.66	105	
Trichlorofluoromethane	ug/kg	50.00	49.28	99	
1,2,3-Trichloropropane	ug/kg	50.00	54.90	110	
1,2,4-Trimethylbenzene	ug/kg	50.00	45.95	92	
1,3,5-Trimethylbenzene	ug/kg	50.00	49.32	99	
Vinyl acetate	ug/kg	100.00	223.6	224	1

Pace Analytical®
www.pacelabs.com

Pace Analytical Services, Inc.
9800 Kincey Avenue, Suite 100
Huntersville, NC 28078
Phone: 704.875.9092
Fax: 704.875.9091

Pace Analytical Services, Inc.
2225 Riverside Drive
Asheville, NC 28804
Phone: 828.254.7176
Fax: 828.252.4618

QUALITY CONTROL DATA

Lab Project Number: 92119722
Client Project ID: Affinia-Wix/41284

LABORATORY CONTROL SAMPLE: 927008482

Parameter	Units	Spike Conc.	LCS Result	LCS % Rec	Footnotes
Vinyl chloride	ug/kg	50.00	47.46	95	
Xylene (Total)	ug/kg	150.00	152.6	102	
m&p-Xylene	ug/kg	100.00	99.35	99	
o-Xylene	ug/kg	50.00	53.23	106	
Toluene-d8 (S)				98	
4-Bromofluorobenzene (S)				103	
Dibromofluoromethane (S)				101	
1,2-Dichloroethane-d4 (S)				99	

MATRIX SPIKE: 927010736

Parameter	Units	927007088 Result	Spike Conc.	MS Result	MS % Rec	Footnotes
Benzene	ug/kg	0	35.21	23.88	68	
Chlorobenzene	ug/kg	0	35.21	13.00	37	2
1,1-Dichloroethene	ug/kg	0	35.21	25.23	72	
Toluene	ug/kg	0	35.21	16.83	48	2
Trichloroethene	ug/kg	0	35.21	19.31	55	
Toluene-d8 (S)					100	
4-Bromofluorobenzene (S)					90	
Dibromofluoromethane (S)					92	
1,2-Dichloroethane-d4 (S)					95	

SAMPLE DUPLICATE: 927010744

Parameter	Units	926992702 Result	DUP Result	RPD	Footnotes
Acetone	ug/kg	ND	ND	NC	
Benzene	ug/kg	ND	ND	NC	
Bromobenzene	ug/kg	ND	ND	NC	
Bromochloromethane	ug/kg	ND	ND	NC	
Bromodichloromethane	ug/kg	ND	ND	NC	
Bromoform	ug/kg	ND	ND	NC	
Bromomethane	ug/kg	ND	ND	NC	
2-Butanone (MEK)	ug/kg	ND	ND	NC	

Pace Analytical®
www.pacelabs.com

Pace Analytical Services, Inc.
9800 Kincey Avenue, Suite 100
Huntersville, NC 28078
Phone: 704.875.9092
Fax: 704.875.9091

Pace Analytical Services, Inc.
2225 Riverside Drive
Asheville, NC 28804
Phone: 828.254.7176
Fax: 828.252.4618

QUALITY CONTROL DATA

Lab Project Number: 92119722
Client Project ID: Affinia-Wix/41284

SAMPLE DUPLICATE: 927010744

Parameter	Units	926992702 Result	DUP Result	RPD	Footnotes
n-Butylbenzene	ug/kg	ND	ND	NC	
sec-Butylbenzene	ug/kg	ND	ND	NC	
tert-Butylbenzene	ug/kg	ND	ND	NC	
Carbon tetrachloride	ug/kg	ND	ND	NC	
Chlorobenzene	ug/kg	ND	ND	NC	
Chloroethane	ug/kg	ND	ND	NC	
Chloroform	ug/kg	ND	ND	NC	
Chloromethane	ug/kg	ND	ND	NC	
2-Chlorotoluene	ug/kg	ND	ND	NC	
4-Chlorotoluene	ug/kg	ND	ND	NC	
1,2-Dibromo-3-chloropropane	ug/kg	ND	ND	NC	
Dibromochloromethane	ug/kg	ND	ND	NC	
1,2-Dibromoethane (EDB)	ug/kg	ND	ND	NC	
Dibromomethane	ug/kg	ND	ND	NC	
1,2-Dichlorobenzene	ug/kg	ND	ND	NC	
1,3-Dichlorobenzene	ug/kg	ND	ND	NC	
1,4-Dichlorobenzene	ug/kg	ND	ND	NC	
Dichlorodifluoromethane	ug/kg	ND	ND	NC	
1,1-Dichloroethane	ug/kg	ND	ND	NC	
1,2-Dichloroethane	ug/kg	ND	ND	NC	
1,1-Dichloroethene	ug/kg	ND	ND	NC	
cis-1,2-Dichloroethene	ug/kg	ND	ND	NC	
trans-1,2-Dichloroethene	ug/kg	ND	ND	NC	
1,2-Dichloropropane	ug/kg	ND	ND	NC	
1,3-Dichloropropane	ug/kg	ND	ND	NC	
2,2-Dichloropropane	ug/kg	ND	ND	NC	
1,1-Dichloropropene	ug/kg	ND	ND	NC	
cis-1,3-Dichloropropene	ug/kg	ND	ND	NC	
trans-1,3-Dichloropropene	ug/kg	ND	ND	NC	
Diisopropyl ether	ug/kg	ND	ND	NC	
Ethylbenzene	ug/kg	ND	ND	NC	
Hexachloro-1,3-butadiene	ug/kg	ND	ND	NC	
2-Hexanone	ug/kg	ND	ND	NC	
Isopropylbenzene (Cumene)	ug/kg	ND	ND	NC	
p-Isopropyltoluene	ug/kg	ND	ND	NC	
Methylene chloride	ug/kg	ND	ND	NC	
4-Methyl-2-pentanone (MIBK)	ug/kg	ND	ND	NC	

Pace Analytical®
www.pacelabs.com

Pace Analytical Services, Inc.
9800 Kincey Avenue, Suite 100
Huntersville, NC 28078
Phone: 704.875.9092
Fax: 704.875.9091

Pace Analytical Services, Inc.
2225 Riverside Drive
Asheville, NC 28804
Phone: 828.254.7176
Fax: 828.252.4618

QUALITY CONTROL DATA

Lab Project Number: 92119722
Client Project ID: Affinia-Wix/41284

SAMPLE DUPLICATE: 927010744

Parameter	Units	926992702 Result	DUP Result	RPD	Footnotes
Methyl-tert-butyl ether	ug/kg	ND	ND	NC	
Naphthalene	ug/kg	ND	ND	NC	
n-Propylbenzene	ug/kg	ND	ND	NC	
Styrene	ug/kg	ND	ND	NC	
1,1,1,2-Tetrachloroethane	ug/kg	ND	ND	NC	
1,1,2,2-Tetrachloroethane	ug/kg	ND	ND	NC	
Tetrachloroethene	ug/kg	ND	ND	NC	
Toluene	ug/kg	ND	ND	NC	
1,2,3-Trichlorobenzene	ug/kg	ND	ND	NC	
1,2,4-Trichlorobenzene	ug/kg	ND	ND	NC	
1,1,1-Trichloroethane	ug/kg	ND	ND	NC	
1,1,2-Trichloroethane	ug/kg	ND	ND	NC	
Trichloroethene	ug/kg	ND	ND	NC	
Trichlorofluoromethane	ug/kg	ND	ND	NC	
1,2,3-Trichloropropane	ug/kg	ND	ND	NC	
1,2,4-Trimethylbenzene	ug/kg	ND	ND	NC	
1,3,5-Trimethylbenzene	ug/kg	ND	ND	NC	
Vinyl acetate	ug/kg	ND	ND	NC	
Vinyl chloride	ug/kg	ND	ND	NC	
Xylene (Total)	ug/kg	ND	ND	NC	
m&p-Xylene	ug/kg	ND	ND	NC	
o-Xylene	ug/kg	ND	ND	NC	
Toluene-d8 (S)	%	101	96		
4-Bromofluorobenzene (S)	%	101	99		
Dibromofluoromethane (S)	%	98	96		
1,2-Dichloroethane-d4 (S)	%	95	91		

Pace Analytical®
www.pacelabs.com

Pace Analytical Services, Inc.
9800 Kincey Avenue, Suite 100
Huntersville, NC 28078
Phone: 704.875.9092
Fax: 704.875.9091

Pace Analytical Services, Inc.
2225 Riverside Drive
Asheville, NC 28804
Phone: 828.254.7176
Fax: 828.252.4618

QUALITY CONTROL DATA

Lab Project Number: 92119722
Client Project ID: Affinia-Wix/41284

QC Batch: 157858 Analysis Method: EPA 8260
QC Batch Method: EPA 8260 Analysis Description: GC/MS VOCs 5035/8260 low level
Associated Lab Samples: 927001974 927001982 927001990 927002014

METHOD BLANK: 927009035
Associated Lab Samples: 927001974 927001982 927001990 927002014

Parameter	Units	Blank Result	Reporting Limit	Footnotes
Acetone	ug/kg	ND	100	
Benzene	ug/kg	ND	5.0	
Bromobenzene	ug/kg	ND	5.0	
Bromochloromethane	ug/kg	ND	5.0	
Bromodichloromethane	ug/kg	ND	5.0	
Bromoform	ug/kg	ND	5.0	
Bromomethane	ug/kg	ND	10.	
2-Butanone (MEK)	ug/kg	ND	100	
n-Butylbenzene	ug/kg	ND	5.0	
sec-Butylbenzene	ug/kg	ND	5.0	
tert-Butylbenzene	ug/kg	ND	5.0	
Carbon tetrachloride	ug/kg	ND	5.0	
Chlorobenzene	ug/kg	ND	5.0	
Chloroethane	ug/kg	ND	10.	
Chloroform	ug/kg	ND	5.0	
Chloromethane	ug/kg	ND	10.	
2-Chlorotoluene	ug/kg	ND	5.0	
4-Chlorotoluene	ug/kg	ND	5.0	
1,2-Dibromo-3-chloropropane	ug/kg	ND	5.0	
Dibromochloromethane	ug/kg	ND	5.0	
1,2-Dibromoethane (EDB)	ug/kg	ND	5.0	
Dibromomethane	ug/kg	ND	5.0	
1,2-Dichlorobenzene	ug/kg	ND	5.0	
1,3-Dichlorobenzene	ug/kg	ND	5.0	
1,4-Dichlorobenzene	ug/kg	ND	5.0	
Dichlorodifluoromethane	ug/kg	ND	10.	
1,1-Dichloroethane	ug/kg	ND	5.0	
1,2-Dichloroethane	ug/kg	ND	5.0	
1,1-Dichloroethene	ug/kg	ND	5.0	
cis-1,2-Dichloroethene	ug/kg	ND	5.0	
trans-1,2-Dichloroethene	ug/kg	ND	5.0	

Pace Analytical®
www.pacelabs.com

Pace Analytical Services, Inc.
9800 Kincey Avenue, Suite 100
Huntersville, NC 28078
Phone: 704.875.9092
Fax: 704.875.9091

Pace Analytical Services, Inc.
2225 Riverside Drive
Asheville, NC 28804
Phone: 828.254.7176
Fax: 828.252.4618

QUALITY CONTROL DATA

Lab Project Number: 92119722
Client Project ID: Affinia-Wix/41284

METHOD BLANK: 927009035
Associated Lab Samples: 927001974 927001982 927001990 927002014

Parameter	Units	Blank Result	Reporting Limit	Footnotes
1,2-Dichloropropane	ug/kg	ND	5.0	
1,3-Dichloropropane	ug/kg	ND	5.0	
2,2-Dichloropropane	ug/kg	ND	5.0	
1,1-Dichloropropene	ug/kg	ND	5.0	
cis-1,3-Dichloropropene	ug/kg	ND	5.0	
trans-1,3-Dichloropropene	ug/kg	ND	5.0	
Diisopropyl ether	ug/kg	ND	5.0	
Ethylbenzene	ug/kg	ND	5.0	
Hexachloro-1,3-butadiene	ug/kg	ND	5.0	
2-Hexanone	ug/kg	ND	50.	
Isopropylbenzene (Cumene)	ug/kg	ND	5.0	
p-Isopropyltoluene	ug/kg	ND	5.0	
Methylene chloride	ug/kg	ND	5.0	
4-Methyl-2-pentanone (MIBK)	ug/kg	ND	50.	
Methyl-tert-butyl ether	ug/kg	ND	5.0	
Naphthalene	ug/kg	ND	5.0	
n-Propylbenzene	ug/kg	ND	5.0	
Styrene	ug/kg	ND	5.0	
1,1,1,2-Tetrachloroethane	ug/kg	ND	5.0	
1,1,2,2-Tetrachloroethane	ug/kg	ND	5.0	
Tetrachloroethene	ug/kg	ND	5.0	
Toluene	ug/kg	ND	5.0	
1,2,3-Trichlorobenzene	ug/kg	ND	5.0	
1,2,4-Trichlorobenzene	ug/kg	ND	5.0	
1,1,1-Trichloroethane	ug/kg	ND	5.0	
1,1,2-Trichloroethane	ug/kg	ND	5.0	
Trichloroethene	ug/kg	ND	5.0	
Trichlorofluoromethane	ug/kg	ND	5.0	
1,2,3-Trichloropropane	ug/kg	ND	5.0	
1,2,4-Trimethylbenzene	ug/kg	ND	5.0	
1,3,5-Trimethylbenzene	ug/kg	ND	5.0	
Vinyl acetate	ug/kg	ND	50.	
Vinyl chloride	ug/kg	ND	10.	
Xylene (Total)	ug/kg	ND	5.0	
m&p-Xylene	ug/kg	ND	10.	
o-Xylene	ug/kg	ND	5.0	

Pace Analytical®
www.pacelabs.com

Pace Analytical Services, Inc.
9800 Kincey Avenue, Suite 100
Huntersville, NC 28078
Phone: 704.875.9092
Fax: 704.875.9091

Pace Analytical Services, Inc.
2225 Riverside Drive
Asheville, NC 28804
Phone: 828.254.7176
Fax: 828.252.4618

QUALITY CONTROL DATA

Lab Project Number: 92119722
Client Project ID: Affinia-Wix/41284

METHOD BLANK: 927009035
Associated Lab Samples: 927001974 927001982 927001990 927002014

Parameter	Units	Blank Result	Reporting Limit	Footnotes
Toluene-d8 (S)	%	100		
4-Bromofluorobenzene (S)	%	99		
Dibromofluoromethane (S)	%	96		
1,2-Dichloroethane-d4 (S)	%	96		

LABORATORY CONTROL SAMPLE: 927009043

Parameter	Units	Spike Conc.	LCS Result	LCS % Rec	Footnotes
Acetone	ug/kg	100.00	104.9	105	
Benzene	ug/kg	50.00	52.01	104	
Bromobenzene	ug/kg	50.00	51.24	102	
Bromochloromethane	ug/kg	50.00	50.32	101	
Bromodichloromethane	ug/kg	50.00	49.95	100	
Bromoform	ug/kg	50.00	50.08	100	
Bromomethane	ug/kg	50.00	57.44	115	
2-Butanone (MEK)	ug/kg	100.00	95.73	96	
n-Butylbenzene	ug/kg	50.00	46.22	92	
sec-Butylbenzene	ug/kg	50.00	50.21	100	
tert-Butylbenzene	ug/kg	50.00	50.66	101	
Carbon tetrachloride	ug/kg	50.00	51.16	102	
Chlorobenzene	ug/kg	50.00	50.19	100	
Chloroethane	ug/kg	50.00	49.68	99	
Chloroform	ug/kg	50.00	49.69	99	
Chloromethane	ug/kg	50.00	56.67	113	
2-Chlorotoluene	ug/kg	50.00	50.01	100	
4-Chlorotoluene	ug/kg	50.00	50.57	101	
1,2-Dibromo-3-chloropropane	ug/kg	50.00	51.15	102	
Dibromochloromethane	ug/kg	50.00	49.93	100	
1,2-Dibromoethane (EDB)	ug/kg	50.00	50.36	101	
Dibromomethane	ug/kg	50.00	50.26	101	
1,2-Dichlorobenzene	ug/kg	50.00	51.20	102	
1,3-Dichlorobenzene	ug/kg	50.00	50.14	100	
1,4-Dichlorobenzene	ug/kg	50.00	49.47	99	
Dichlorodifluoromethane	ug/kg	50.00	58.25	116	

Pace Analytical®
www.pacelabs.com

Pace Analytical Services, Inc.
9800 Kincey Avenue, Suite 100
Huntersville, NC 28078
Phone: 704.875.9092
Fax: 704.875.9091

Pace Analytical Services, Inc.
2225 Riverside Drive
Asheville, NC 28804
Phone: 828.254.7176
Fax: 828.252.4618

QUALITY CONTROL DATA

Lab Project Number: 92119722
Client Project ID: Affinia-Wix/41284

LABORATORY CONTROL SAMPLE: 927009043

Parameter	Units	Spike Conc.	LCS Result	LCS % Rec	Footnotes
1,1-Dichloroethane	ug/kg	50.00	50.53	101	
1,2-Dichloroethane	ug/kg	50.00	48.73	98	
1,1-Dichloroethene	ug/kg	50.00	53.66	107	
cis-1,2-Dichloroethene	ug/kg	50.00	51.68	103	
trans-1,2-Dichloroethene	ug/kg	50.00	51.92	104	
1,2-Dichloropropane	ug/kg	50.00	48.54	97	
1,3-Dichloropropane	ug/kg	50.00	47.57	95	
2,2-Dichloropropane	ug/kg	50.00	52.55	105	
1,1-Dichloropropene	ug/kg	50.00	48.78	98	
cis-1,3-Dichloropropene	ug/kg	50.00	48.74	98	
trans-1,3-Dichloropropene	ug/kg	50.00	50.83	102	
Diisopropyl ether	ug/kg	50.00	49.60	99	
Ethylbenzene	ug/kg	50.00	51.63	103	
Hexachloro-1,3-butadiene	ug/kg	50.00	52.51	105	
2-Hexanone	ug/kg	100.00	98.85	99	
Isopropylbenzene (Cumene)	ug/kg	50.00	50.12	100	
p-Isopropyltoluene	ug/kg	50.00	46.35	93	
Methylene chloride	ug/kg	50.00	50.28	101	
4-Methyl-2-pentanone (MIBK)	ug/kg	100.00	98.03	98	
Methyl-tert-butyl ether	ug/kg	50.00	48.04	96	
Naphthalene	ug/kg	50.00	48.44	97	
n-Propylbenzene	ug/kg	50.00	50.70	101	
Styrene	ug/kg	50.00	51.22	102	
1,1,1,2-Tetrachloroethane	ug/kg	50.00	49.56	99	
1,1,2,2-Tetrachloroethane	ug/kg	50.00	50.50	101	
Tetrachloroethene	ug/kg	50.00	50.18	100	
Toluene	ug/kg	50.00	49.99	100	
1,2,3-Trichlorobenzene	ug/kg	50.00	54.45	109	
1,2,4-Trichlorobenzene	ug/kg	50.00	52.74	105	
1,1,1-Trichloroethane	ug/kg	50.00	49.97	100	
1,1,2-Trichloroethane	ug/kg	50.00	48.54	97	
Trichloroethene	ug/kg	50.00	50.07	100	
Trichlorofluoromethane	ug/kg	50.00	51.77	104	
1,2,3-Trichloropropane	ug/kg	50.00	46.57	93	
1,2,4-Trimethylbenzene	ug/kg	50.00	46.45	93	
1,3,5-Trimethylbenzene	ug/kg	50.00	46.16	92	
Vinyl acetate	ug/kg	100.00	103.5	103	

Pace Analytical®
www.pacelabs.com

Pace Analytical Services, Inc.
9800 Kincey Avenue, Suite 100
Huntersville, NC 28078
Phone: 704.875.9092
Fax: 704.875.9091

Pace Analytical Services, Inc.
2225 Riverside Drive
Asheville, NC 28804
Phone: 828.254.7176
Fax: 828.252.4618

QUALITY CONTROL DATA

Lab Project Number: 92119722
Client Project ID: Affinia-Wix/41284

LABORATORY CONTROL SAMPLE: 927009043

Parameter	Units	Spike Conc.	LCS Result	LCS % Rec	Footnotes
Vinyl chloride	ug/kg	50.00	53.37	107	
Xylene (Total)	ug/kg	150.00	149.3	100	
m&p-Xylene	ug/kg	100.00	99.95	100	
o-Xylene	ug/kg	50.00	49.35	99	
Toluene-d8 (S)				100	
4-Bromofluorobenzene (S)				101	
Dibromofluoromethane (S)				100	
1,2-Dichloroethane-d4 (S)				99	

MATRIX SPIKE: 927010553

Parameter	Units	927001974 Result	Spike Conc.	MS Result	MS % Rec	Footnotes
Benzene	ug/kg	0.9933	42.66	45.43	104	
Chlorobenzene	ug/kg	0	42.66	42.71	100	
1,1-Dichloroethene	ug/kg	0	42.66	44.83	105	
Toluene	ug/kg	140.6	42.66	5336	12180	2
Trichloroethene	ug/kg	0	42.66	43.48	102	
Toluene-d8 (S)					86	
4-Bromofluorobenzene (S)					94	
Dibromofluoromethane (S)					96	
1,2-Dichloroethane-d4 (S)					98	

SAMPLE DUPLICATE: 927010546

Parameter	Units	927007930 Result	DUP Result	RPD	Footnotes
Acetone	ug/kg	3100	5200	51	3
Benzene	ug/kg	ND	ND	NC	
Bromobenzene	ug/kg	ND	ND	NC	
Bromochloromethane	ug/kg	ND	ND	NC	
Bromodichloromethane	ug/kg	ND	ND	NC	
Bromoform	ug/kg	ND	ND	NC	
Bromomethane	ug/kg	ND	ND	NC	
2-Butanone (MEK)	ug/kg	ND	ND	NC	

Pace Analytical®
www.pacelabs.com

Pace Analytical Services, Inc.
9800 Kincey Avenue, Suite 100
Huntersville, NC 28078
Phone: 704.875.9092
Fax: 704.875.9091

Pace Analytical Services, Inc.
2225 Riverside Drive
Asheville, NC 28804
Phone: 828.254.7176
Fax: 828.252.4618

QUALITY CONTROL DATA

Lab Project Number: 92119722
Client Project ID: Affinia-Wix/41284

SAMPLE DUPLICATE: 927010546

Parameter	Units	927007930 Result	DUP Result	RPD	Footnotes
n-Butylbenzene	ug/kg	ND	ND	NC	
sec-Butylbenzene	ug/kg	ND	ND	NC	
tert-Butylbenzene	ug/kg	ND	ND	NC	
Carbon tetrachloride	ug/kg	ND	ND	NC	
Chlorobenzene	ug/kg	ND	ND	NC	
Chloroethane	ug/kg	ND	ND	NC	
Chloroform	ug/kg	ND	ND	NC	
Chloromethane	ug/kg	ND	ND	NC	
2-Chlorotoluene	ug/kg	ND	ND	NC	
4-Chlorotoluene	ug/kg	ND	ND	NC	
1,2-Dibromo-3-chloropropane	ug/kg	ND	ND	NC	
Dibromochloromethane	ug/kg	ND	ND	NC	
1,2-Dibromoethane (EDB)	ug/kg	ND	ND	NC	
Dibromomethane	ug/kg	ND	ND	NC	
1,2-Dichlorobenzene	ug/kg	ND	ND	NC	
1,3-Dichlorobenzene	ug/kg	ND	ND	NC	
1,4-Dichlorobenzene	ug/kg	ND	ND	NC	
Dichlorodifluoromethane	ug/kg	ND	ND	NC	
1,1-Dichloroethane	ug/kg	ND	ND	NC	
1,2-Dichloroethane	ug/kg	ND	ND	NC	
1,1-Dichloroethene	ug/kg	ND	ND	NC	
cis-1,2-Dichloroethene	ug/kg	ND	ND	NC	
trans-1,2-Dichloroethene	ug/kg	ND	ND	NC	
1,2-Dichloropropane	ug/kg	ND	ND	NC	
1,3-Dichloropropane	ug/kg	ND	ND	NC	
2,2-Dichloropropane	ug/kg	ND	ND	NC	
1,1-Dichloropropene	ug/kg	ND	ND	NC	
cis-1,3-Dichloropropene	ug/kg	ND	ND	NC	
trans-1,3-Dichloropropene	ug/kg	ND	ND	NC	
Diisopropyl ether	ug/kg	ND	ND	NC	
Ethylbenzene	ug/kg	ND	ND	NC	
Hexachloro-1,3-butadiene	ug/kg	ND	ND	NC	
2-Hexanone	ug/kg	ND	ND	NC	
Isopropylbenzene (Cumene)	ug/kg	ND	ND	NC	
p-Isopropyltoluene	ug/kg	ND	ND	NC	
Methylene chloride	ug/kg	ND	ND	NC	
4-Methyl-2-pentanone (MIBK)	ug/kg	ND	ND	NC	

Pace Analytical®
www.pacelabs.com

Pace Analytical Services, Inc.
9800 Kincey Avenue, Suite 100
Huntersville, NC 28078
Phone: 704.875.9092
Fax: 704.875.9091

Pace Analytical Services, Inc.
2225 Riverside Drive
Asheville, NC 28804
Phone: 828.254.7176
Fax: 828.252.4618

QUALITY CONTROL DATA

Lab Project Number: 92119722
Client Project ID: Affinia-Wix/41284

SAMPLE DUPLICATE: 927010546

Parameter	Units	927007930 Result	DUP Result	RPD	Footnotes
Methyl-tert-butyl ether	ug/kg	ND	ND	NC	
Naphthalene	ug/kg	ND	ND	NC	
n-Propylbenzene	ug/kg	ND	ND	NC	
Styrene	ug/kg	ND	ND	NC	
1,1,1,2-Tetrachloroethane	ug/kg	ND	ND	NC	
1,1,2,2-Tetrachloroethane	ug/kg	ND	ND	NC	
Tetrachloroethene	ug/kg	ND	ND	NC	
Toluene	ug/kg	ND	4.900	0	
1,2,3-Trichlorobenzene	ug/kg	ND	ND	NC	
1,2,4-Trichlorobenzene	ug/kg	ND	ND	NC	
1,1,1-Trichloroethane	ug/kg	ND	ND	NC	
1,1,2-Trichloroethane	ug/kg	ND	ND	NC	
Trichloroethene	ug/kg	ND	ND	NC	
Trichlorofluoromethane	ug/kg	ND	ND	NC	
1,2,3-Trichloropropane	ug/kg	ND	ND	NC	
1,2,4-Trimethylbenzene	ug/kg	ND	ND	NC	
1,3,5-Trimethylbenzene	ug/kg	ND	ND	NC	
Vinyl acetate	ug/kg	ND	ND	NC	
Vinyl chloride	ug/kg	ND	ND	NC	
Xylene (Total)	ug/kg	ND	ND	NC	
m&p-Xylene	ug/kg	ND	ND	NC	
o-Xylene	ug/kg	ND	ND	NC	
Toluene-d8 (S)	%	99	99		
4-Bromofluorobenzene (S)	%	94	93		
Dibromofluoromethane (S)	%	98	99		
1,2-Dichloroethane-d4 (S)	%	103	104		

Pace Analytical®
www.pacelabs.com

Pace Analytical Services, Inc.
9800 Kincey Avenue, Suite 100
Huntersville, NC 28078
Phone: 704.875.9092
Fax: 704.875.9091

Pace Analytical Services, Inc.
2225 Riverside Drive
Asheville, NC 28804
Phone: 828.254.7176
Fax: 828.252.4618

QUALITY CONTROL DATA

Lab Project Number: 92119722
Client Project ID: Affinia-Wix/41284

QC Batch: 158186 Analysis Method: EPA 8260
QC Batch Method: EPA 8260 Analysis Description: GC/MS VOCs 5035/8260 low level
Associated Lab Samples: 927002055 927002063

METHOD BLANK: 927023697
Associated Lab Samples: 927002055 927002063

Parameter	Units	Blank Result	Reporting Limit	Footnotes
Acetone	ug/kg	ND	100	
Benzene	ug/kg	ND	5.0	
Bromobenzene	ug/kg	ND	5.0	
Bromochloromethane	ug/kg	ND	5.0	
Bromodichloromethane	ug/kg	ND	5.0	
Bromoform	ug/kg	ND	5.0	
Bromomethane	ug/kg	ND	10.	
2-Butanone (MEK)	ug/kg	ND	100	
n-Butylbenzene	ug/kg	ND	5.0	
sec-Butylbenzene	ug/kg	ND	5.0	
tert-Butylbenzene	ug/kg	ND	5.0	
Carbon tetrachloride	ug/kg	ND	5.0	
Chlorobenzene	ug/kg	ND	5.0	
Chloroethane	ug/kg	ND	10.	
Chloroform	ug/kg	ND	5.0	
Chloromethane	ug/kg	ND	10.	
2-Chlorotoluene	ug/kg	ND	5.0	
4-Chlorotoluene	ug/kg	ND	5.0	
1,2-Dibromo-3-chloropropane	ug/kg	ND	5.0	
Dibromochloromethane	ug/kg	ND	5.0	
1,2-Dibromoethane (EDB)	ug/kg	ND	5.0	
Dibromomethane	ug/kg	ND	5.0	
1,2-Dichlorobenzene	ug/kg	ND	5.0	
1,3-Dichlorobenzene	ug/kg	ND	5.0	
1,4-Dichlorobenzene	ug/kg	ND	5.0	
Dichlorodifluoromethane	ug/kg	ND	10.	
1,1-Dichloroethane	ug/kg	ND	5.0	
1,2-Dichloroethane	ug/kg	ND	5.0	
1,1-Dichloroethene	ug/kg	ND	5.0	
cis-1,2-Dichloroethene	ug/kg	ND	5.0	
trans-1,2-Dichloroethene	ug/kg	ND	5.0	

Pace Analytical®
www.pacelabs.com

Pace Analytical Services, Inc.
9800 Kincey Avenue, Suite 100
Huntersville, NC 28078
Phone: 704.875.9092
Fax: 704.875.9091

Pace Analytical Services, Inc.
2225 Riverside Drive
Asheville, NC 28804
Phone: 828.254.7176
Fax: 828.252.4618

QUALITY CONTROL DATA

Lab Project Number: 92119722
Client Project ID: Affinia-Wix/41284

METHOD BLANK: 927023697
Associated Lab Samples: 927002055 927002063

Parameter	Units	Blank Result	Reporting Limit	Footnotes
1,2-Dichloropropane	ug/kg	ND	5.0	
1,3-Dichloropropane	ug/kg	ND	5.0	
2,2-Dichloropropane	ug/kg	ND	5.0	
1,1-Dichloropropene	ug/kg	ND	5.0	
cis-1,3-Dichloropropene	ug/kg	ND	5.0	
trans-1,3-Dichloropropene	ug/kg	ND	5.0	
Diisopropyl ether	ug/kg	ND	5.0	
Ethylbenzene	ug/kg	ND	5.0	
Hexachloro-1,3-butadiene	ug/kg	ND	5.0	
2-Hexanone	ug/kg	ND	50.	
Isopropylbenzene (Cumene)	ug/kg	ND	5.0	
p-Isopropyltoluene	ug/kg	ND	5.0	
Methylene chloride	ug/kg	ND	5.0	
4-Methyl-2-pentanone (MIBK)	ug/kg	ND	50.	
Methyl-tert-butyl ether	ug/kg	ND	5.0	
Naphthalene	ug/kg	ND	5.0	
n-Propylbenzene	ug/kg	ND	5.0	
Styrene	ug/kg	ND	5.0	
1,1,1,2-Tetrachloroethane	ug/kg	ND	5.0	
1,1,2,2-Tetrachloroethane	ug/kg	ND	5.0	
Tetrachloroethene	ug/kg	ND	5.0	
Toluene	ug/kg	ND	5.0	
1,2,3-Trichlorobenzene	ug/kg	ND	5.0	
1,2,4-Trichlorobenzene	ug/kg	ND	5.0	
1,1,1-Trichloroethane	ug/kg	ND	5.0	
1,1,2-Trichloroethane	ug/kg	ND	5.0	
Trichloroethene	ug/kg	ND	5.0	
Trichlorofluoromethane	ug/kg	ND	5.0	
1,2,3-Trichloropropane	ug/kg	ND	5.0	
1,2,4-Trimethylbenzene	ug/kg	ND	5.0	
1,3,5-Trimethylbenzene	ug/kg	ND	5.0	
Vinyl acetate	ug/kg	ND	50.	
Vinyl chloride	ug/kg	ND	10.	
Xylene (Total)	ug/kg	ND	5.0	
m&p-Xylene	ug/kg	ND	10.	
o-Xylene	ug/kg	ND	5.0	

Pace Analytical®
www.pacelabs.com

Pace Analytical Services, Inc.
9800 Kincey Avenue, Suite 100
Huntersville, NC 28078
Phone: 704.875.9092
Fax: 704.875.9091

Pace Analytical Services, Inc.
2225 Riverside Drive
Asheville, NC 28804
Phone: 828.254.7176
Fax: 828.252.4618

QUALITY CONTROL DATA

Lab Project Number: 92119722
Client Project ID: Affinia-Wix/41284

METHOD BLANK: 927023697
Associated Lab Samples: 927002055 927002063

Parameter	Units	Blank Result	Reporting Limit	Footnotes
Toluene-d8 (S)	%	108		
4-Bromofluorobenzene (S)	%	97		
Dibromofluoromethane (S)	%	105		
1,2-Dichloroethane-d4 (S)	%	103		

LABORATORY CONTROL SAMPLE: 927023705

Parameter	Units	Spike Conc.	LCS Result	LCS % Rec	Footnotes
Acetone	ug/kg	100.00	101.5	102	
Benzene	ug/kg	50.00	49.71	99	
Bromobenzene	ug/kg	50.00	56.00	112	
Bromochloromethane	ug/kg	50.00	53.68	107	
Bromodichloromethane	ug/kg	50.00	44.32	89	
Bromoform	ug/kg	50.00	50.66	101	
Bromomethane	ug/kg	50.00	65.34	131	
2-Butanone (MEK)	ug/kg	100.00	96.38	96	
n-Butylbenzene	ug/kg	50.00	46.56	93	
sec-Butylbenzene	ug/kg	50.00	50.75	101	
tert-Butylbenzene	ug/kg	50.00	50.80	102	
Carbon tetrachloride	ug/kg	50.00	48.23	96	
Chlorobenzene	ug/kg	50.00	53.90	108	
Chloroethane	ug/kg	50.00	51.71	103	
Chloroform	ug/kg	50.00	48.93	98	
Chloromethane	ug/kg	50.00	49.84	100	
2-Chlorotoluene	ug/kg	50.00	50.09	100	
4-Chlorotoluene	ug/kg	50.00	51.56	103	
1,2-Dibromo-3-chloropropane	ug/kg	50.00	61.18	122	
Dibromochloromethane	ug/kg	50.00	50.47	101	
1,2-Dibromoethane (EDB)	ug/kg	50.00	51.19	102	
Dibromomethane	ug/kg	50.00	49.74	100	
1,2-Dichlorobenzene	ug/kg	50.00	53.27	107	
1,3-Dichlorobenzene	ug/kg	50.00	51.87	104	
1,4-Dichlorobenzene	ug/kg	50.00	51.81	104	
Dichlorodifluoromethane	ug/kg	50.00	53.91	108	

Pace Analytical®
www.pacelabs.com

Pace Analytical Services, Inc.
9800 Kincey Avenue, Suite 100
Huntersville, NC 28078
Phone: 704.875.9092
Fax: 704.875.9091

Pace Analytical Services, Inc.
2225 Riverside Drive
Asheville, NC 28804
Phone: 828.254.7176
Fax: 828.252.4618

QUALITY CONTROL DATA

Lab Project Number: 92119722
Client Project ID: Affinia-Wix/41284

LABORATORY CONTROL SAMPLE: 927023705

Parameter	Units	Spike Conc.	LCS Result	LCS % Rec	Footnotes
1,1-Dichloroethane	ug/kg	50.00	48.87	98	
1,2-Dichloroethane	ug/kg	50.00	47.86	96	
1,1-Dichloroethene	ug/kg	50.00	51.60	103	
cis-1,2-Dichloroethene	ug/kg	50.00	50.82	102	
trans-1,2-Dichloroethene	ug/kg	50.00	50.48	101	
1,2-Dichloropropane	ug/kg	50.00	45.26	90	
1,3-Dichloropropane	ug/kg	50.00	51.58	103	
2,2-Dichloropropane	ug/kg	50.00	47.89	96	
1,1-Dichloropropene	ug/kg	50.00	42.21	84	
cis-1,3-Dichloropropene	ug/kg	50.00	43.60	87	
trans-1,3-Dichloropropene	ug/kg	50.00	44.44	89	
Diisopropyl ether	ug/kg	50.00	45.41	91	
Ethylbenzene	ug/kg	50.00	53.94	108	
Hexachloro-1,3-butadiene	ug/kg	50.00	56.17	112	
2-Hexanone	ug/kg	100.00	118.3	118	
Isopropylbenzene (Cumene)	ug/kg	50.00	52.83	106	
p-Isopropyltoluene	ug/kg	50.00	46.70	93	
Methylene chloride	ug/kg	50.00	43.95	88	
4-Methyl-2-pentanone (MIBK)	ug/kg	100.00	98.58	99	
Methyl-tert-butyl ether	ug/kg	50.00	47.21	94	
Naphthalene	ug/kg	50.00	52.56	105	
n-Propylbenzene	ug/kg	50.00	51.27	103	
Styrene	ug/kg	50.00	50.04	100	
1,1,1,2-Tetrachloroethane	ug/kg	50.00	51.53	103	
1,1,2,2-Tetrachloroethane	ug/kg	50.00	57.43	115	
Tetrachloroethene	ug/kg	50.00	51.67	103	
Toluene	ug/kg	50.00	48.19	96	
1,2,3-Trichlorobenzene	ug/kg	50.00	54.91	110	
1,2,4-Trichlorobenzene	ug/kg	50.00	53.63	107	
1,1,1-Trichloroethane	ug/kg	50.00	43.88	88	
1,1,2-Trichloroethane	ug/kg	50.00	51.46	103	
Trichloroethene	ug/kg	50.00	47.30	95	
Trichlorofluoromethane	ug/kg	50.00	48.05	96	
1,2,3-Trichloropropane	ug/kg	50.00	51.65	103	
1,2,4-Trimethylbenzene	ug/kg	50.00	45.77	92	
1,3,5-Trimethylbenzene	ug/kg	50.00	45.62	91	
Vinyl acetate	ug/kg	100.00	106.0	106	

Pace Analytical®
www.pacelabs.com

Pace Analytical Services, Inc.
9800 Kincey Avenue, Suite 100
Huntersville, NC 28078
Phone: 704.875.9092
Fax: 704.875.9091

Pace Analytical Services, Inc.
2225 Riverside Drive
Asheville, NC 28804
Phone: 828.254.7176
Fax: 828.252.4618

QUALITY CONTROL DATA

Lab Project Number: 92119722
Client Project ID: Affinia-Wix/41284

LABORATORY CONTROL SAMPLE: 927023705

Parameter	Units	Spike Conc.	LCS Result	LCS % Rec	Footnotes
Vinyl chloride	ug/kg	50.00	52.99	106	
Xylene (Total)	ug/kg	150.00	155.9	104	
m&p-Xylene	ug/kg	100.00	106.7	107	
o-Xylene	ug/kg	50.00	49.18	98	
Toluene-d8 (S)				99	
4-Bromofluorobenzene (S)				103	
Dibromofluoromethane (S)				104	
1,2-Dichloroethane-d4 (S)				102	

MATRIX SPIKE: 927034413

Parameter	Units	927002972 Result	Spike Conc.	MS Result	MS % Rec	Footnotes
Benzene	ug/kg	0	54.08	51.03	94	
Chlorobenzene	ug/kg	0	54.08	50.02	92	
1,1-Dichloroethene	ug/kg	0	54.08	53.26	98	
Toluene	ug/kg	0	54.08	49.82	92	
Trichloroethene	ug/kg	0	54.08	51.02	94	
Toluene-d8 (S)					96	
4-Bromofluorobenzene (S)					101	
Dibromofluoromethane (S)					94	
1,2-Dichloroethane-d4 (S)					92	

SAMPLE DUPLICATE: 927029694

Parameter	Units	927002949 Result	DUP Result	RPD	Footnotes
Acetone	ug/kg	ND	ND	NC	
Benzene	ug/kg	ND	ND	NC	
Bromobenzene	ug/kg	ND	ND	NC	
Bromochloromethane	ug/kg	ND	ND	NC	
Bromodichloromethane	ug/kg	ND	ND	NC	
Bromoform	ug/kg	ND	ND	NC	
Bromomethane	ug/kg	ND	ND	NC	

Pace Analytical®
www.pacelabs.com

Pace Analytical Services, Inc.
9800 Kincey Avenue, Suite 100
Huntersville, NC 28078
Phone: 704.875.9092
Fax: 704.875.9091

Pace Analytical Services, Inc.
2225 Riverside Drive
Asheville, NC 28804
Phone: 828.254.7176
Fax: 828.252.4618

QUALITY CONTROL DATA

Lab Project Number: 92119722
Client Project ID: Affinia-Wix/41284

SAMPLE DUPLICATE: 927029694

Parameter	Units	927002949 Result	DUP Result	RPD	Footnotes
2-Butanone (MEK)	ug/kg	ND	ND	NC	
n-Butylbenzene	ug/kg	ND	ND	NC	
sec-Butylbenzene	ug/kg	ND	ND	NC	
tert-Butylbenzene	ug/kg	ND	ND	NC	
Carbon tetrachloride	ug/kg	ND	ND	NC	
Chlorobenzene	ug/kg	ND	ND	NC	
Chloroethane	ug/kg	ND	ND	NC	
Chloroform	ug/kg	ND	ND	NC	
Chloromethane	ug/kg	ND	ND	NC	
2-Chlorotoluene	ug/kg	ND	ND	NC	
4-Chlorotoluene	ug/kg	ND	ND	NC	
1,2-Dibromo-3-chloropropane	ug/kg	ND	ND	NC	
Dibromochloromethane	ug/kg	ND	ND	NC	
1,2-Dibromoethane (EDB)	ug/kg	ND	ND	NC	
Dibromomethane	ug/kg	ND	ND	NC	
1,2-Dichlorobenzene	ug/kg	ND	ND	NC	
1,3-Dichlorobenzene	ug/kg	ND	ND	NC	
1,4-Dichlorobenzene	ug/kg	ND	ND	NC	
Dichlorodifluoromethane	ug/kg	ND	ND	NC	
1,1-Dichloroethane	ug/kg	ND	ND	NC	
1,2-Dichloroethane	ug/kg	ND	ND	NC	
1,1-Dichloroethene	ug/kg	ND	ND	NC	
cis-1,2-Dichloroethene	ug/kg	ND	ND	NC	
trans-1,2-Dichloroethene	ug/kg	ND	ND	NC	
1,2-Dichloropropane	ug/kg	ND	ND	NC	
1,3-Dichloropropane	ug/kg	ND	ND	NC	
2,2-Dichloropropane	ug/kg	ND	ND	NC	
1,1-Dichloropropene	ug/kg	ND	ND	NC	
cis-1,3-Dichloropropene	ug/kg	ND	ND	NC	
trans-1,3-Dichloropropene	ug/kg	ND	ND	NC	
Diisopropyl ether	ug/kg	ND	ND	NC	
Ethylbenzene	ug/kg	ND	ND	NC	
Hexachloro-1,3-butadiene	ug/kg	ND	ND	NC	
2-Hexanone	ug/kg	ND	ND	NC	
Isopropylbenzene (Cumene)	ug/kg	ND	ND	NC	
p-Isopropyltoluene	ug/kg	ND	ND	NC	
Methylene chloride	ug/kg	ND	ND	NC	

Pace Analytical®
www.pacelabs.com

Pace Analytical Services, Inc.
9800 Kincey Avenue, Suite 100
Huntersville, NC 28078
Phone: 704.875.9092
Fax: 704.875.9091

Pace Analytical Services, Inc.
2225 Riverside Drive
Asheville, NC 28804
Phone: 828.254.7176
Fax: 828.252.4618

QUALITY CONTROL DATA

Lab Project Number: 92119722
Client Project ID: Affinia-Wix/41284

SAMPLE DUPLICATE: 927029694

Parameter	Units	927002949 Result	DUP Result	RPD	Footnotes
4-Methyl-2-pentanone (MIBK)	ug/kg	ND	ND	NC	
Methyl-tert-butyl ether	ug/kg	ND	ND	NC	
Naphthalene	ug/kg	ND	ND	NC	
n-Propylbenzene	ug/kg	ND	ND	NC	
Styrene	ug/kg	ND	ND	NC	
1,1,1,2-Tetrachloroethane	ug/kg	ND	ND	NC	
1,1,2,2-Tetrachloroethane	ug/kg	ND	ND	NC	
Tetrachloroethene	ug/kg	ND	ND	NC	
Toluene	ug/kg	ND	ND	NC	
1,2,3-Trichlorobenzene	ug/kg	ND	ND	NC	
1,2,4-Trichlorobenzene	ug/kg	ND	ND	NC	
1,1,1-Trichloroethane	ug/kg	ND	ND	NC	
1,1,2-Trichloroethane	ug/kg	ND	ND	NC	
Trichloroethene	ug/kg	ND	ND	NC	
Trichlorofluoromethane	ug/kg	ND	ND	NC	
1,2,3-Trichloropropane	ug/kg	ND	ND	NC	
1,2,4-Trimethylbenzene	ug/kg	ND	ND	NC	
1,3,5-Trimethylbenzene	ug/kg	ND	ND	NC	
Vinyl acetate	ug/kg	ND	ND	NC	
Vinyl chloride	ug/kg	ND	ND	NC	
Xylene (Total)	ug/kg	ND	ND	NC	
m&p-Xylene	ug/kg	ND	ND	NC	
o-Xylene	ug/kg	ND	ND	NC	
Toluene-d8 (S)	%	101	107		
4-Bromofluorobenzene (S)	%	96	96		
Dibromofluoromethane (S)	%	89	100		
1,2-Dichloroethane-d4 (S)	%	87	99		

Pace Analytical®
www.pacelabs.com

Pace Analytical Services, Inc.
9800 Kincey Avenue, Suite 100
Huntersville, NC 28078
Phone: 704.875.9092
Fax: 704.875.9091

Pace Analytical Services, Inc.
2225 Riverside Drive
Asheville, NC 28804
Phone: 828.254.7176
Fax: 828.252.4618

QUALITY CONTROL DATA

Lab Project Number: 92119722
Client Project ID: Affinia-Wix/41284

QC Batch: 158423 Analysis Method: EPA 8260
QC Batch Method: EPA 8260 Analysis Description: GC/MS VOCs 5035/8260 low level
Associated Lab Samples: 927002006

METHOD BLANK: 927034926
Associated Lab Samples: 927002006

Parameter	Units	Blank Result	Reporting Limit	Footnotes
Acetone	ug/kg	ND	100	
Benzene	ug/kg	ND	5.0	
Bromobenzene	ug/kg	ND	5.0	
Bromochloromethane	ug/kg	ND	5.0	
Bromodichloromethane	ug/kg	ND	5.0	
Bromoform	ug/kg	ND	5.0	
Bromomethane	ug/kg	ND	10.	
2-Butanone (MEK)	ug/kg	ND	100	
n-Butylbenzene	ug/kg	ND	5.0	
sec-Butylbenzene	ug/kg	ND	5.0	
tert-Butylbenzene	ug/kg	ND	5.0	
Carbon tetrachloride	ug/kg	ND	5.0	
Chlorobenzene	ug/kg	ND	5.0	
Chloroethane	ug/kg	ND	10.	
Chloroform	ug/kg	ND	5.0	
Chloromethane	ug/kg	ND	10.	
2-Chlorotoluene	ug/kg	ND	5.0	
4-Chlorotoluene	ug/kg	ND	5.0	
1,2-Dibromo-3-chloropropane	ug/kg	ND	5.0	
Dibromochloromethane	ug/kg	ND	5.0	
1,2-Dibromoethane (EDB)	ug/kg	ND	5.0	
Dibromomethane	ug/kg	ND	5.0	
1,2-Dichlorobenzene	ug/kg	ND	5.0	
1,3-Dichlorobenzene	ug/kg	ND	5.0	
1,4-Dichlorobenzene	ug/kg	ND	5.0	
Dichlorodifluoromethane	ug/kg	ND	10.	
1,1-Dichloroethane	ug/kg	ND	5.0	
1,2-Dichloroethane	ug/kg	ND	5.0	
1,1-Dichloroethene	ug/kg	ND	5.0	
cis-1,2-Dichloroethene	ug/kg	ND	5.0	
trans-1,2-Dichloroethene	ug/kg	ND	5.0	

Pace Analytical®
www.pacelabs.com

Pace Analytical Services, Inc.
9800 Kincey Avenue, Suite 100
Huntersville, NC 28078
Phone: 704.875.9092
Fax: 704.875.9091

Pace Analytical Services, Inc.
2225 Riverside Drive
Asheville, NC 28804
Phone: 828.254.7176
Fax: 828.252.4618

QUALITY CONTROL DATA

Lab Project Number: 92119722
Client Project ID: Affinia-Wix/41284

METHOD BLANK: 927034926
Associated Lab Samples: 927002006

Parameter	Units	Blank Result	Reporting Limit	Footnotes
1,2-Dichloropropane	ug/kg	ND	5.0	
1,3-Dichloropropane	ug/kg	ND	5.0	
2,2-Dichloropropane	ug/kg	ND	5.0	
1,1-Dichloropropene	ug/kg	ND	5.0	
cis-1,3-Dichloropropene	ug/kg	ND	5.0	
trans-1,3-Dichloropropene	ug/kg	ND	5.0	
Diisopropyl ether	ug/kg	ND	5.0	
Ethylbenzene	ug/kg	ND	5.0	
Hexachloro-1,3-butadiene	ug/kg	ND	5.0	
2-Hexanone	ug/kg	ND	50.	
Isopropylbenzene (Cumene)	ug/kg	ND	5.0	
p-Isopropyltoluene	ug/kg	ND	5.0	
Methylene chloride	ug/kg	ND	5.0	
4-Methyl-2-pentanone (MIBK)	ug/kg	ND	50.	
Methyl-tert-butyl ether	ug/kg	ND	5.0	
Naphthalene	ug/kg	ND	5.0	
n-Propylbenzene	ug/kg	ND	5.0	
Styrene	ug/kg	ND	5.0	
1,1,1,2-Tetrachloroethane	ug/kg	ND	5.0	
1,1,2,2-Tetrachloroethane	ug/kg	ND	5.0	
Tetrachloroethene	ug/kg	ND	5.0	
Toluene	ug/kg	ND	5.0	
1,2,3-Trichlorobenzene	ug/kg	ND	5.0	
1,2,4-Trichlorobenzene	ug/kg	ND	5.0	
1,1,1-Trichloroethane	ug/kg	ND	5.0	
1,1,2-Trichloroethane	ug/kg	ND	5.0	
Trichloroethene	ug/kg	ND	5.0	
Trichlorofluoromethane	ug/kg	ND	5.0	
1,2,3-Trichloropropane	ug/kg	ND	5.0	
1,2,4-Trimethylbenzene	ug/kg	ND	5.0	
1,3,5-Trimethylbenzene	ug/kg	ND	5.0	
Vinyl acetate	ug/kg	ND	50.	
Vinyl chloride	ug/kg	ND	10.	
Xylene (Total)	ug/kg	ND	5.0	
m&p-Xylene	ug/kg	ND	10.	
o-Xylene	ug/kg	ND	5.0	

Pace Analytical®
www.pacelabs.com

Pace Analytical Services, Inc.
9800 Kincey Avenue, Suite 100
Huntersville, NC 28078
Phone: 704.875.9092
Fax: 704.875.9091

Pace Analytical Services, Inc.
2225 Riverside Drive
Asheville, NC 28804
Phone: 828.254.7176
Fax: 828.252.4618

QUALITY CONTROL DATA

Lab Project Number: 92119722
Client Project ID: Affinia-Wix/41284

METHOD BLANK: 927034926
Associated Lab Samples: 927002006

Parameter	Units	Blank Result	Reporting Limit	Footnotes
Toluene-d8 (S)	%	98		
4-Bromofluorobenzene (S)	%	97		
Dibromofluoromethane (S)	%	95		
1,2-Dichloroethane-d4 (S)	%	91		

LABORATORY CONTROL SAMPLE: 927034934

Parameter	Units	Spike Conc.	LCS Result	LCS % Rec	Footnotes
Acetone	ug/kg	100.00	125.2	125	
Benzene	ug/kg	50.00	60.22	120	
Bromobenzene	ug/kg	50.00	62.51	125	
Bromochloromethane	ug/kg	50.00	56.11	112	
Bromodichloromethane	ug/kg	50.00	59.89	120	
Bromoform	ug/kg	50.00	59.72	119	
Bromomethane	ug/kg	50.00	63.01	126	
2-Butanone (MEK)	ug/kg	100.00	109.2	109	
n-Butylbenzene	ug/kg	50.00	54.37	109	
sec-Butylbenzene	ug/kg	50.00	58.21	116	
tert-Butylbenzene	ug/kg	50.00	57.72	115	
Carbon tetrachloride	ug/kg	50.00	59.67	119	
Chlorobenzene	ug/kg	50.00	58.58	117	
Chloroethane	ug/kg	50.00	52.67	105	
Chloroform	ug/kg	50.00	59.87	120	
Chloromethane	ug/kg	50.00	37.67	75	
2-Chlorotoluene	ug/kg	50.00	57.21	114	
4-Chlorotoluene	ug/kg	50.00	57.96	116	
1,2-Dibromo-3-chloropropane	ug/kg	50.00	61.04	122	
Dibromochloromethane	ug/kg	50.00	59.21	118	
1,2-Dibromoethane (EDB)	ug/kg	50.00	61.59	123	
Dibromomethane	ug/kg	50.00	58.48	117	
1,2-Dichlorobenzene	ug/kg	50.00	59.37	119	
1,3-Dichlorobenzene	ug/kg	50.00	56.96	114	
1,4-Dichlorobenzene	ug/kg	50.00	58.66	117	
Dichlorodifluoromethane	ug/kg	50.00	24.76	50	

Pace Analytical®
www.pacelabs.com

Pace Analytical Services, Inc.
9800 Kincey Avenue, Suite 100
Huntersville, NC 28078
Phone: 704.875.9092
Fax: 704.875.9091

Pace Analytical Services, Inc.
2225 Riverside Drive
Asheville, NC 28804
Phone: 828.254.7176
Fax: 828.252.4618

QUALITY CONTROL DATA

Lab Project Number: 92119722
Client Project ID: Affinia-Wix/41284

LABORATORY CONTROL SAMPLE: 927034934

Parameter	Units	Spike Conc.	LCS Result	LCS % Rec	Footnotes
1,1-Dichloroethane	ug/kg	50.00	59.69	119	
1,2-Dichloroethane	ug/kg	50.00	57.13	114	
1,1-Dichloroethene	ug/kg	50.00	58.23	116	
cis-1,2-Dichloroethene	ug/kg	50.00	60.02	120	
trans-1,2-Dichloroethene	ug/kg	50.00	57.06	114	
1,2-Dichloropropane	ug/kg	50.00	57.66	115	
1,3-Dichloropropane	ug/kg	50.00	56.27	113	
2,2-Dichloropropane	ug/kg	50.00	56.26	113	
1,1-Dichloropropene	ug/kg	50.00	54.99	110	
cis-1,3-Dichloropropene	ug/kg	50.00	58.29	117	
trans-1,3-Dichloropropene	ug/kg	50.00	53.05	106	
Diisopropyl ether	ug/kg	50.00	58.24	116	
Ethylbenzene	ug/kg	50.00	60.12	120	
Hexachloro-1,3-butadiene	ug/kg	50.00	63.51	127	
2-Hexanone	ug/kg	100.00	123.0	123	
Isopropylbenzene (Cumene)	ug/kg	50.00	59.95	120	
p-Isopropyltoluene	ug/kg	50.00	54.23	108	
Methylene chloride	ug/kg	50.00	52.86	106	
4-Methyl-2-pentanone (MIBK)	ug/kg	100.00	115.0	115	
Methyl-tert-butyl ether	ug/kg	50.00	57.44	115	
Naphthalene	ug/kg	50.00	62.05	124	
n-Propylbenzene	ug/kg	50.00	58.69	117	
Styrene	ug/kg	50.00	60.26	121	
1,1,1,2-Tetrachloroethane	ug/kg	50.00	58.15	116	
1,1,2,2-Tetrachloroethane	ug/kg	50.00	60.51	121	
Tetrachloroethene	ug/kg	50.00	54.71	109	
Toluene	ug/kg	50.00	59.22	118	
1,2,3-Trichlorobenzene	ug/kg	50.00	68.92	138	
1,2,4-Trichlorobenzene	ug/kg	50.00	65.66	131	
1,1,1-Trichloroethane	ug/kg	50.00	59.08	118	
1,1,2-Trichloroethane	ug/kg	50.00	58.28	117	
Trichloroethene	ug/kg	50.00	56.53	113	
Trichlorofluoromethane	ug/kg	50.00	53.45	107	
1,2,3-Trichloropropane	ug/kg	50.00	51.63	103	
1,2,4-Trimethylbenzene	ug/kg	50.00	53.12	106	
1,3,5-Trimethylbenzene	ug/kg	50.00	53.67	107	
Vinyl acetate	ug/kg	100.00	99.58	100	

Pace Analytical®
www.pacelabs.com

Pace Analytical Services, Inc.
9800 Kincey Avenue, Suite 100
Huntersville, NC 28078
Phone: 704.875.9092
Fax: 704.875.9091

Pace Analytical Services, Inc.
2225 Riverside Drive
Asheville, NC 28804
Phone: 828.254.7176
Fax: 828.252.4618

QUALITY CONTROL DATA

Lab Project Number: 92119722
Client Project ID: Affinia-Wix/41284

LABORATORY CONTROL SAMPLE: 927034934

Parameter	Units	Spike Conc.	LCS Result	LCS % Rec	Footnotes
Vinyl chloride	ug/kg	50.00	45.99	92	
Xylene (Total)	ug/kg	150.00	179.5	120	
m&p-Xylene	ug/kg	100.00	119.0	119	
o-Xylene	ug/kg	50.00	60.50	121	
Toluene-d8 (S)				99	
4-Bromofluorobenzene (S)				104	
Dibromofluoromethane (S)				101	
1,2-Dichloroethane-d4 (S)				108	

Pace Analytical®
www.pacelabs.com

Pace Analytical Services, Inc.
9800 Kincey Avenue, Suite 100
Huntersville, NC 28078
Phone: 704.875.9092
Fax: 704.875.9091

Pace Analytical Services, Inc.
2225 Riverside Drive
Asheville, NC 28804
Phone: 828.254.7176
Fax: 828.252.4618

QUALITY CONTROL DATA

Lab Project Number: 92119722
Client Project ID: Affinia-Wix/41284

QC Batch: 157698 Analysis Method: % Moisture
QC Batch Method: Analysis Description: Percent Moisture
Associated Lab Samples: 927001974 927001982 927001990 927002006 927002014 927002022 927002030 927002048 927002055 927002063 927002071

SAMPLE DUPLICATE: 927003111

Parameter	Units	927002659 Result	DUP Result	RPD	Footnotes
Percent Moisture	%	9.000	8.400	7	

Pace Analytical®
www.pacelabs.com

Pace Analytical Services, Inc.
9800 Kincey Avenue, Suite 100
Huntersville, NC 28078
Phone: 704.875.9092
Fax: 704.875.9091

Pace Analytical Services, Inc.
2225 Riverside Drive
Asheville, NC 28804
Phone: 828.254.7176
Fax: 828.252.4618

Lab Project Number: 92119722
Client Project ID: Affinia-Wix/41284

QUALITY CONTROL DATA PARAMETER FOOTNOTES

Consistent with EPA guidelines, unrounded concentrations are displayed and have been used to calculate % Rec and RPD values.

LCS(D)	Laboratory Control Sample (Duplicate)
MS(D)	Matrix Spike (Duplicate)
DUP	Sample Duplicate
ND	Not detected at or above adjusted reporting limit
NC	Not Calculable
J	Estimated concentration above the adjusted method detection limit and below the adjusted reporting limit
MDL	Adjusted Method Detection Limit
RPD	Relative Percent Difference
(S)	Surrogate
[1]	Recovery falls outside of QC limits, however, this compound is not found in the associated samples.
[2]	The spike recovery was outside acceptance limits for the MS and /or MSD due to matrix interference. The LCS and/or LCSD were within acceptance limits showing that the laboratory is in control and the data is acceptable.
[3]	Compound concentration exceeds the calibration range of the instrument (CLP E-Flag).

Subcontracted Results

Pace Project

92119722

TOC

This report includes page 1 to 16B.

TestAmerica
ANALYTICAL TESTING CORPORATION
2960 Foster Creighton Road Nashville, TN 37204 * 800-765-0980 * Fax 615-726-3404

May 31, 2006

Client: Pace Analytical (7228)
9800 Kincy Avenue, Suite 100
Huntersville, NC 28078
Attn: Annette Scott

Work Order: NPE3249
Project Name: Pace Analytical
Project Nbr: 92119722
P/O Nbr.
Date Received: 05/23/06

SAMPLE IDENTIFICATION	LAB NUMBER	COLLECTION DATE AND TIME
927001958 / MW-3 (8-10)	NPE3249-01	05/17/06 12:55
927001966 / STB-10 (12-14)	NPE3249-02	05/18/06 08:30

An executed copy of the chain of custody, the project quality control data, and the sample receipt form are also included as an addendum to this report If you have any questions relating to this analytical report, please contact your Laboratory Project Manager at 1-800-765-0980. Any opinions, if expressed, are outside the scope of the Laboratory's accredidation.

The Chain(s) of Custody, 2 pages, are included and are an integral part of this report.

These results relate only to the items tested. This report shall not be reproduced except in full and with permission of the laboratory.

Report Approved By:

Jessica Vickers
Senior Project Manager

TestAmerica
ANALYTICAL TESTING CORPORATION
2960 Foster Creighton Road Nashville, TN 37204 * 800-765-0980 * Fax 615-726-3404

Client	Pace Analytical (7228) 9800 Kincy Avenue, Suite 100 Huntersville, NC 28078	Work Order:	NPE3249
		Project Name:	Pace Analytical
		Project Number:	92119722
Attn	Annette Scott	Received:	05/23/06 08 45

ANALYTICAL REPORT

Analyte	Result	Flag	Units	MRL	Dilution Factor	Analysis Date/Time	Method	Batch
Sample ID: NPE3249-01 (927001958 / MW-3 (8-10) - Solid/Soil) Sampled: 05/17/06 12:55								
General Chemistry Parameters								
Total Organic Carbon	ND		mg/Kg dry	1000	1	05/25/06 10 19	SW846 9060M	6054726
Sample ID: NPE3249-02 (927001966 / STB-10 (12-14) - Solid/Soil) Sampled: 05/18/06 08:30								
General Chemistry Parameters								
Total Organic Carbon	2960		mg/Kg dry	1000	1	05/25/06 10 19	SW846 9060M	6054726

TestAmerica
ANALYTICAL TESTING CORPORATION
2960 Foster Creighton Road Nashville, TN 37204 * 800-765-0980 * Fax 615-726-3404

Client	Pace Analytical (7228) 9800 Kincy Avenue, Suite 100 Huntersville, NC 28078	Work Order	NPE3249
		Project Name	Pace Analytical
		Project Number.	92119722
Attn	Annette Scott	Received:	05/23/06 08 45

PROJECT QUALITY CONTROL DATA
Blank

Analyte	Blank Value	Q	Units	Q C. Batch	Lab Number	Analyzed Date/Time
General Chemistry Parameters						
6054726-BLK1						
Total Organic Carbon	<501		mg/Kg dry	6054726	6054726-BLK1	05/25/06 10:19

TestAmerica
ANALYTICAL TESTING CORPORATION
2960 Foster Creighton Road Nashville, TN 37204 * 800-765-0980 * Fax 615-726-3404

Client	Pace Analytical (7228) 9800 Kincy Avenue, Suite 100 Huntersville, NC 28078	Work Order	NPE3249
		Project Name	Pace Analytical
		Project Number:	92119722
Attn	Annette Scott	Received:	05/23/06 08.45

PROJECT QUALITY CONTROL DATA
Duplicate

Analyte	Orig Val.	Duplicate	Q	Units	RPD	Limit	Batch	Sample Duplicated	Analyzed Date/Time
General Chemistry Parameters									
6054726-DUP1									
Total Organic Carbon	ND	ND		mg/Kg dry		20	6054726	NPE3249-01	05/25/06 10:19

TestAmerica
ANALYTICAL TESTING CORPORATION
2960 Foster Creighton Road Nashville, TN 37204 * 800-765-0980 * Fax 615-726-3404

Client	Pace Analytical (7228) 9800 Kincy Avenue, Suite 100 Huntersville, NC 28078	Work Order.	NPE3249
		Project Name.	Pace Analytical
		Project Number·	92119722
Attn	Annette Scott	Received:	05/23/06 08.45

PROJECT QUALITY CONTROL DATA
LCS

Analyte	Known Val.	Analyzed Val	Q	Units	% Rec	Target Range	Batch	Analyzed Date/Time
General Chemistry Parameters								
6054726-BS1								
Total Organic Carbon	29900	29900		mg/Kg dry	100%	90 - 110	6054726	05/25/06 10·19

TestAmerica
ANALYTICAL TESTING CORPORATION
2960 Foster Creighton Road Nashville, TN 37204 * 800-765-0980 * Fax 615-726-3404

Client	Pace Analytical (7228) 9800 Kincy Avenue, Suite 100 Huntersville, NC 28078	Work Order	NPE3249
		Project Name:	Pace Analytical
		Project Number	92119722
Attn	Annette Scott	Received:	05/23/06 08.45

CERTIFICATION SUMMARY

TestAmerica - Nashville, TN

Method	Matrix	AIHA	Nelac	North Carolina
SW846 9060M	Soil	N/A	N/A	

Pace Analytical®

CHAIN OF CUSTODY / Analytical Request Document

The Chain-of-Custody is a LEGAL DOCUMENT. All relevant fields must be completed accurately.

Page: of 0987355

Section A Required Client Information:

Company: ERM
Address: 1498 Jamdo Park Blvd Ste. 100, Mt. Pleasant, SC 29464
Email To: mark.easterbrook@erm.com
Phone: 843-856-4270 Fax: 856-4283
Requested Due Date/TAT:

Section B Required Project Information.

Report To: Todd Moody
Copy To: Mark Easterbrook
Purchase Order No :
Project Name: Affinia - Wix
Project Number: 412.84

Section C Invoice Information.

Attention: Todd Moody
Company Name: ERM
Address: same
Pace Quote Reference:
Pace Project Manager:
Pace Profile #: 4232-2

REGULATORY AGENCY: ☐ NPDES ☐ GROUND WATER ☐ DRINKING WATER ☐ UST ☐ RCRA ☒ Other DHEC

SITE LOCATION: ☐GA ☐IL ☐IN ☐MI ☐MN ☐NC ☐OH ☒SC ☐WI ☐OTHER ____

Section D Required Client Information

Valid Matrix Codes: DRINKING WATER DW; WATER WT; WASTE WATER WW; PRODUCT P; SOIL/SOLID SL; OIL OL; WIPE WP; AIR AR; OTHER OT; TISSUE TS

ITEM #	SAMPLE ID (One Character per box. (A-Z, 0-9 / ,-) Samples IDs MUST BE UNIQUE)	MATRIX CODE	SAMPLE TYPE G=GRAB C=COMP	COMPOSITE START DATE	COMPOSITE START TIME	COMPOSITE END/GRAB DATE	COMPOSITE END/GRAB TIME	SAMPLE TEMP AT COLLECTION	# OF CONTAINERS	Unpreserved	H_2SO_4	HNO_3	HCl	NaOH	$Na_2S_2O_3$	Methanol	Other	Requested Analysis: 8260B	Residual Chlorine (Y/N)	Pace Project Number / Lab I.D
1	STB-1(4-6)	SL	C			5/16/06	1035		4	1					2	1		4		
2																				
3																				
4																				
5																				
6																				
7																				
8																				
9																				
10																				
11																				
12																				

Additional Comments:

RELINQUISHED BY / AFFILIATION	DATE	TIME	ACCEPTED BY / AFFILIATION	DATE	TIME
[illegible]	5/16/06	1300	[illegible]	[illegible]	[illegible]

SAMPLE CONDITION

Temp in °C	Received on Ice	Custody Sealed Cooler	Samples Intact
[illegible]	Y/N	Y/N	Y/N
	Y/N	Y/N	Y/N
	Y/N	Y/N	Y/N
	Y/N	Y/N	Y/N

SAMPLER NAME AND SIGNATURE

PRINT Name of SAMPLER: Mark Easterbrook

SIGNATURE of SAMPLER: [signature]

DATE Signed (MM / DD / YY): 05/16/06

SEE REVERSE SIDE FOR INSTRUCTIONS

Pace Analytical®

CHAIN OF CUSTODY / Analytical Request Document

The Chain-of-Custody is a LEGAL DOCUMENT. All relevant fields must be completed accurately.

Page: 1 of

0987306

Section A Required Client Information:

Company	
Address	
Email To:	
Phone	Fax
Requested Due Date/TAT:	

Section B Required Project Information:

Report To:
Copy To:
Purchase Order No.:
Project Name:
Project Number:

Section C Invoice Information:

Attention:
Company Name:
Address:
Pace Quote Reference:
Pace Project Manager:
Pace Profile #: 4232-2

REGULATORY AGENCY

☐ NPDES ☐ GROUND WATER ☐ DRINKING WATER
☐ UST ☐ RCRA ☒ Other DHEC

SITE LOCATION ☐GA ☐IL ☐IN ☐MI ☐MN ☐NC ☐OH ☒SC ☐WI ☐OTHER ____

Section D Required Client Information

Valid Matrix Codes

MATRIX	CODE
DRINKING WATER	DW
WATER	WT
WASTE WATER	WW
PRODUCT	P
SOIL/SOLID	SL
OIL	OL
WIPE	WP
AIR	AR
OTHER	OT
TISSUE	TS

ITEM #	SAMPLE ID (One Character per box. (A-Z, 0-9 / ,-) Samples IDs MUST BE UNIQUE)	MATRIX CODE	SAMPLE TYPE G=GRAB C=COMP	COMPOSITE START DATE	COMPOSITE START TIME	COMPOSITE END/GRAB DATE	COMPOSITE END/GRAB TIME	SAMPLE TEMP AT COLLECTION	# OF CONTAINERS	Unpreserved	H_2SO_4	HNO_3	HCl	NaOH	$Na_2S_2O_3$	Methanol	Other	Total Organic Carbon 9060B	Filtered (Y/N)	Residual Chlorine (Y/N)	Pace Project Number / Lab I.D
1	MW-3(8-10)	SL	~~G~~	~~5/16/06~~		5/17/06	1255		1									1			[illegible]
2	STB-7(2-4)	SL	C			5/17/06	1230		4	1					2	1			4		[illegible]
3	STB-6(6-8)	SL	C			5/17/06	0940		4	1					2	1			4		[illegible]
4	STB-5(4-6)	SL	C			5/17/06	0715		4	1					2	1			4		[illegible]
5	STB-10(12-14)	SL	C			5/18/06	0830		1									1			[illegible]
6	STB-10(8-10)	SL	C			5/18/06	0805		4	1					2	1			4		[illegible]
7	STB-9(8-10)	SL	C			5/17/06	1655		4	1					2	1			4		[illegible]
8	STB-2(6-8)	SL	C			5/16/06	1740		4	1					2	1			4		[illegible]
9	STB-3(8-10)	SL	C			5/16/06	~~1545~~ 1430		4	1					2	1			4		[illegible]
10	STB-4(4-6)	SL	C			5/16/06	1545		4	1					2	1			4		[illegible]
11	STB-8(6-8)	SL	C			5/17/06	1530		4	1					2	1			4		[illegible]
12	STB-DUP	SL	C			5/17/06	1200		4	1					2	1			4		[illegible]

Preservatives

Requested Analysis:

Additional Comments:

RELINQUISHED BY / AFFILIATION	DATE	TIME	ACCEPTED BY / AFFILIATION	DATE	TIME
			[illegible]	5/17	[illegible]

SAMPLE CONDITION

Temp in °C	Received on Ice	Custody Sealed Cooler	Samples Intact
[illegible]	Y/N	Y/N	Y/N
	Y/N	Y/N	Y/N
	Y/N	Y/N	Y/N
	Y/N	Y/N	Y/N

SAMPLER NAME AND SIGNATURE

PRINT Name of SAMPLER: Mark Easterbrook

SIGNATURE of SAMPLER: Mark Easterbrook

DATE Signed (MM / DD / YY) 05/18/06

SEE REVERSE SIDE FOR INSTRUCTIONS

ALL-Q020rev.3 31Mar05

Pace Analytical™
www.pacelabs.com

Pace Analytical Services, Inc.
9800 Kincey Avenue, Suite 100
Huntersville, NC 28078
Phone: 704.875.9092
Fax: 704.875.9091

Pace Analytical Services, Inc.
2225 Riverside Drive
Asheville, NC 28804
Phone: 828.254.7176
Fax: 828.252.4618

June 08, 2006

Mr. Todd Moody
ERM-Southeast
498 Wando Park Blvd
Suite 100
Mt Pleasant, SC 29464

RE: Lab Project Number: 92120131
Client Project ID: Wix/Affinia

Dear Mr. Moody:

Enclosed are the analytical results for sample(s) received by the laboratory on May 26, 2006. Results reported herein conform to the most current NELAC standards, where applicable, unless otherwise narrated in the body of the report.

Inorganic Wet Chemistry and Metals Analyses were performed at our Pace Asheville laboratory and Organic testing was performed at our Pace Charlotte laboratory unless otherwise footnoted.

If you have any questions concerning this report please feel free to contact me.

Sincerely,

Annette Scott

Annette Scott
annette.scott@pacelabs.com
Project Manager

Enclosures

Pace Analytical
www.pacelabs.com

Pace Analytical Services, Inc.
9800 Kincey Avenue, Suite 100
Huntersville, NC 28078
Phone: 704.875.9092
Fax: 704.875.9091

Pace Analytical Services, Inc.
2225 Riverside Drive
Asheville, NC 28804
Phone: 828.254.7176
Fax: 828.252.4618

Lab Project Number: 92120131
Client Project ID: Wix/Affinia

***ALL QC IS NOT COMPLETE FOR QC SAMPLE(S):

ESN 927045310	BATCH 158689
ESN 927045328	BATCH 158689
ESN 927067108	BATCH 158928
ESN 927067116	BATCH 158928

Pace Analytical
www.pacelabs.com

Pace Analytical Services, Inc.
9800 Kincey Avenue, Suite 100
Huntersville, NC 28078
Phone: 704.875.9092
Fax: 704.875.9091

Pace Analytical Services, Inc.
2225 Riverside Drive
Asheville, NC 28804
Phone: 828.254.7176
Fax: 828.252.4618

Lab Project Number: 92120131
Client Project ID: Wix/Affinia

Solid results are reported on a dry weight basis

Lab Sample No: 927028571 Project Sample Number: 92120131-001 Date Collected: 05/24/06 12:55
Client Sample ID: MW-4 Matrix: Water Date Received: 05/26/06 09:30

GC/MS Volatiles

GC/MS VOCs by 8260, low level Method: EPA 8260

Parameters	Results	Units	Report Limit	Analyzed	By	CAS No.	Qual	RegLmt
Acetone	27.	ug/l	25.	06/01/06 15:23	MSF	67-64-1		
Benzene	27.	ug/l	1.0	06/01/06 15:23	MSF	71-43-2		
Bromobenzene	ND	ug/l	1.0	06/01/06 15:23	MSF	108-86-1		
Bromochloromethane	ND	ug/l	1.0	06/01/06 15:23	MSF	74-97-5		
Bromodichloromethane	ND	ug/l	1.0	06/01/06 15:23	MSF	75-27-4		
Bromoform	ND	ug/l	1.0	06/01/06 15:23	MSF	75-25-2		
Bromomethane	ND	ug/l	1.0	06/01/06 15:23	MSF	74-83-9		
2-Butanone (MEK)	6.6	ug/l	5.0	06/01/06 15:23	MSF	78-93-3		
n-Butylbenzene	ND	ug/l	1.0	06/01/06 15:23	MSF	104-51-8		
sec-Butylbenzene	ND	ug/l	1.0	06/01/06 15:23	MSF	135-98-8		
tert-Butylbenzene	ND	ug/l	1.0	06/01/06 15:23	MSF	98-06-6		
Carbon tetrachloride	ND	ug/l	1.0	06/01/06 15:23	MSF	56-23-5		
Chlorobenzene	ND	ug/l	1.0	06/01/06 15:23	MSF	108-90-7		
Chloroethane	ND	ug/l	1.0	06/01/06 15:23	MSF	75-00-3		
Chloroform	ND	ug/l	1.0	06/01/06 15:23	MSF	67-66-3		
Chloromethane	ND	ug/l	1.0	06/01/06 15:23	MSF	74-87-3		
2-Chlorotoluene	ND	ug/l	1.0	06/01/06 15:23	MSF	95-49-8		
4-Chlorotoluene	ND	ug/l	1.0	06/01/06 15:23	MSF	106-43-4		
1,2-Dibromo-3-chloropropane	ND	ug/l	1.0	06/01/06 15:23	MSF	96-12-8		
Dibromochloromethane	ND	ug/l	1.0	06/01/06 15:23	MSF	124-48-1		
1,2-Dibromoethane (EDB)	ND	ug/l	1.0	06/01/06 15:23	MSF	106-93-4		
Dibromomethane	ND	ug/l	1.0	06/01/06 15:23	MSF	74-95-3		
1,2-Dichlorobenzene	ND	ug/l	1.0	06/01/06 15:23	MSF	95-50-1		
1,3-Dichlorobenzene	ND	ug/l	1.0	06/01/06 15:23	MSF	541-73-1		
1,4-Dichlorobenzene	ND	ug/l	1.0	06/01/06 15:23	MSF	106-46-7		
Dichlorodifluoromethane	ND	ug/l	1.0	06/01/06 15:23	MSF	75-71-8		
1,1-Dichloroethane	ND	ug/l	1.0	06/01/06 15:23	MSF	75-34-3		
1,2-Dichloroethane	ND	ug/l	1.0	06/01/06 15:23	MSF	107-06-2		
1,2-Dichloroethene (Total)	5.1	ug/l	1.0	06/01/06 15:23	MSF	540-59-0		
1,1-Dichloroethene	ND	ug/l	1.0	06/01/06 15:23	MSF	75-35-4		
cis-1,2-Dichloroethene	4.8	ug/l	1.0	06/01/06 15:23	MSF	156-59-2		
trans-1,2-Dichloroethene	ND	ug/l	1.0	06/01/06 15:23	MSF	156-60-5		
1,2-Dichloropropane	ND	ug/l	1.0	06/01/06 15:23	MSF	78-87-5		
1,3-Dichloropropane	ND	ug/l	1.0	06/01/06 15:23	MSF	142-28-9		
2,2-Dichloropropane	ND	ug/l	1.0	06/01/06 15:23	MSF	594-20-7		
1,1-Dichloropropene	ND	ug/l	1.0	06/01/06 15:23	MSF	563-58-6		

Pace Analytical
www.pacelabs.com

Pace Analytical Services, Inc.
9800 Kincey Avenue, Suite 100
Huntersville, NC 28078
Phone: 704.875.9092
Fax: 704.875.9091

Pace Analytical Services, Inc.
2225 Riverside Drive
Asheville, NC 28804
Phone: 828.254.7176
Fax: 828.252.4618

Lab Project Number: 92120131
Client Project ID: Wix/Affinia

Lab Sample No: 927028571 | Project Sample Number: 92120131-001 | Date Collected: 05/24/06 12:55
Client Sample ID: MW-4 | Matrix: Water | Date Received: 05/26/06 09:30

Parameters	Results	Units	Report Limit	Analyzed	By	CAS No.	Qual	RegLmt
Diisopropyl ether	ND	ug/l	1.0	06/01/06 15:23	MSF	108-20-3		
Ethylbenzene	3.4	ug/l	1.0	06/01/06 15:23	MSF	100-41-4		
Hexachloro-1,3-butadiene	ND	ug/l	1.0	06/01/06 15:23	MSF	87-68-3		
Isopropylbenzene (Cumene)	ND	ug/l	1.0	06/01/06 15:23	MSF	98-82-8		
p-Isopropyltoluene	ND	ug/l	1.0	06/01/06 15:23	MSF	99-87-6		
Methylene chloride	ND	ug/l	2.0	06/01/06 15:23	MSF	75-09-2		
Methyl-tert-butyl ether	ND	ug/l	1.0	06/01/06 15:23	MSF	1634-04-4		
Naphthalene	ND	ug/l	1.0	06/01/06 15:23	MSF	91-20-3		
n-Propylbenzene	1.1	ug/l	1.0	06/01/06 15:23	MSF	103-65-1		
Styrene	ND	ug/l	1.0	06/01/06 15:23	MSF	100-42-5		
1,1,1,2-Tetrachloroethane	ND	ug/l	1.0	06/01/06 15:23	MSF	630-20-6		
1,1,2,2-Tetrachloroethane	ND	ug/l	1.0	06/01/06 15:23	MSF	79-34-5		
Tetrachloroethene	ND	ug/l	1.0	06/01/06 15:23	MSF	127-18-4		
Toluene	41000	ug/l	500	06/01/06 15:23	MSF	108-88-3		
1,2,3-Trichlorobenzene	ND	ug/l	1.0	06/01/06 15:23	MSF	87-61-6		
1,2,4-Trichlorobenzene	ND	ug/l	1.0	06/01/06 15:23	MSF	120-82-1		
1,1,1-Trichloroethane	ND	ug/l	1.0	06/01/06 15:23	MSF	71-55-6		
1,1,2-Trichloroethane	ND	ug/l	1.0	06/01/06 15:23	MSF	79-00-5		
Trichloroethene	ND	ug/l	1.0	06/01/06 15:23	MSF	79-01-6		
Trichlorofluoromethane	ND	ug/l	1.0	06/01/06 15:23	MSF	75-69-4		
1,2,3-Trichloropropane	ND	ug/l	1.0	06/01/06 15:23	MSF	96-18-4		
1,2,4-Trimethylbenzene	ND	ug/l	1.0	06/01/06 15:23	MSF	95-63-6		
1,3,5-Trimethylbenzene	1.6	ug/l	1.0	06/01/06 15:23	MSF	108-67-8		
Vinyl chloride	ND	ug/l	1.0	06/01/06 15:23	MSF	75-01-4		
Xylene (Total)	9.3	ug/l	1.0	06/01/06 15:23	MSF	1330-20-7		
m&p-Xylene	4.1	ug/l	2.0	06/01/06 15:23	MSF			
o-Xylene	5.2	ug/l	1.0	06/01/06 15:23	MSF	95-47-6		
Toluene-d8 (S)	151	%		06/01/06 15:23	MSF	2037-26-5	1	
4-Bromofluorobenzene (S)	99	%		06/01/06 15:23	MSF	460-00-4		
Dibromofluoromethane (S)	103	%		06/01/06 15:23	MSF	1868-53-7		
1,2-Dichloroethane-d4 (S)	104	%		06/01/06 15:23	MSF	17060-07-0		

Pace Analytical
www.pacelabs.com

Pace Analytical Services, Inc.
9800 Kincey Avenue, Suite 100
Huntersville, NC 28078
Phone: 704.875.9092
Fax: 704.875.9091

Pace Analytical Services, Inc.
2225 Riverside Drive
Asheville, NC 28804
Phone: 828.254.7176
Fax: 828.252.4618

Lab Project Number: 92120131
Client Project ID: Wix/Affinia

Lab Sample No: 927028589 | Project Sample Number: 92120131-002 | Date Collected: 05/24/06 15:40
Client Sample ID: MW-2 | Matrix: Water | Date Received: 05/26/06 09:30

Parameters	Results	Units	Report Limit	Analyzed	By	CAS No.	Qual	RegLmt
GC/MS Volatiles								
GC/MS VOCs by 8260, low level	Method: EPA 8260							
Acetone	ND	ug/l	25.	06/01/06 15:47	MSF	67-64-1		
Benzene	21.	ug/l	1.0	06/01/06 15:47	MSF	71-43-2		
Bromobenzene	ND	ug/l	1.0	06/01/06 15:47	MSF	108-86-1		
Bromochloromethane	ND	ug/l	1.0	06/01/06 15:47	MSF	74-97-5		
Bromodichloromethane	ND	ug/l	1.0	06/01/06 15:47	MSF	75-27-4		
Bromoform	ND	ug/l	1.0	06/01/06 15:47	MSF	75-25-2		
Bromomethane	ND	ug/l	1.0	06/01/06 15:47	MSF	74-83-9		
2-Butanone (MEK)	ND	ug/l	5.0	06/01/06 15:47	MSF	78-93-3		
n-Butylbenzene	ND	ug/l	1.0	06/01/06 15:47	MSF	104-51-8		
sec-Butylbenzene	ND	ug/l	1.0	06/01/06 15:47	MSF	135-98-8		
tert-Butylbenzene	ND	ug/l	1.0	06/01/06 15:47	MSF	98-06-6		
Carbon tetrachloride	ND	ug/l	1.0	06/01/06 15:47	MSF	56-23-5		
Chlorobenzene	ND	ug/l	1.0	06/01/06 15:47	MSF	108-90-7		
Chloroethane	ND	ug/l	1.0	06/01/06 15:47	MSF	75-00-3		
Chloroform	ND	ug/l	1.0	06/01/06 15:47	MSF	67-66-3		
Chloromethane	ND	ug/l	1.0	06/01/06 15:47	MSF	74-87-3		
2-Chlorotoluene	ND	ug/l	1.0	06/01/06 15:47	MSF	95-49-8		
4-Chlorotoluene	ND	ug/l	1.0	06/01/06 15:47	MSF	106-43-4		
1,2-Dibromo-3-chloropropane	ND	ug/l	1.0	06/01/06 15:47	MSF	96-12-8		
Dibromochloromethane	ND	ug/l	1.0	06/01/06 15:47	MSF	124-48-1		
1,2-Dibromoethane (EDB)	ND	ug/l	1.0	06/01/06 15:47	MSF	106-93-4		
Dibromomethane	ND	ug/l	1.0	06/01/06 15:47	MSF	74-95-3		
1,2-Dichlorobenzene	ND	ug/l	1.0	06/01/06 15:47	MSF	95-50-1		
1,3-Dichlorobenzene	ND	ug/l	1.0	06/01/06 15:47	MSF	541-73-1		
1,4-Dichlorobenzene	ND	ug/l	1.0	06/01/06 15:47	MSF	106-46-7		
Dichlorodifluoromethane	ND	ug/l	1.0	06/01/06 15:47	MSF	75-71-8		
1,1-Dichloroethane	ND	ug/l	1.0	06/01/06 15:47	MSF	75-34-3		
1,2-Dichloroethane	ND	ug/l	1.0	06/01/06 15:47	MSF	107-06-2		
1,2-Dichloroethene (Total)	ND	ug/l	1.0	06/01/06 15:47	MSF	540-59-0		
1,1-Dichloroethene	ND	ug/l	1.0	06/01/06 15:47	MSF	75-35-4		
cis-1,2-Dichloroethene	ND	ug/l	1.0	06/01/06 15:47	MSF	156-59-2		
trans-1,2-Dichloroethene	ND	ug/l	1.0	06/01/06 15:47	MSF	156-60-5		
1,2-Dichloropropane	ND	ug/l	1.0	06/01/06 15:47	MSF	78-87-5		
1,3-Dichloropropane	ND	ug/l	1.0	06/01/06 15:47	MSF	142-28-9		
2,2-Dichloropropane	ND	ug/l	1.0	06/01/06 15:47	MSF	594-20-7		
1,1-Dichloropropene	ND	ug/l	1.0	06/01/06 15:47	MSF	563-58-6		
Diisopropyl ether	ND	ug/l	1.0	06/01/06 15:47	MSF	108-20-3		

Pace Analytical
www.pacelabs.com

Pace Analytical Services, Inc.
9800 Kincey Avenue, Suite 100
Huntersville, NC 28078
Phone: 704.875.9092
Fax: 704.875.9091

Pace Analytical Services, Inc.
2225 Riverside Drive
Asheville, NC 28804
Phone: 828.254.7176
Fax: 828.252.4618

Lab Project Number: 92120131
Client Project ID: Wix/Affinia

Lab Sample No: 927028589 Project Sample Number: 92120131-002 Date Collected: 05/24/06 15:40
Client Sample ID: MW-2 Matrix: Water Date Received: 05/26/06 09:30

Parameters	Results	Units	Report Limit	Analyzed	By	CAS No.	Qual	RegLmt
Ethylbenzene	3.0	ug/l	1.0	06/01/06 15:47	MSF	100-41-4		
Hexachloro-1,3-butadiene	ND	ug/l	1.0	06/01/06 15:47	MSF	87-68-3		
Isopropylbenzene (Cumene)	ND	ug/l	1.0	06/01/06 15:47	MSF	98-82-8		
p-Isopropyltoluene	ND	ug/l	1.0	06/01/06 15:47	MSF	99-87-6		
Methylene chloride	ND	ug/l	2.0	06/01/06 15:47	MSF	75-09-2		
Methyl-tert-butyl ether	ND	ug/l	1.0	06/01/06 15:47	MSF	1634-04-4		
Naphthalene	ND	ug/l	1.0	06/01/06 15:47	MSF	91-20-3		
n-Propylbenzene	ND	ug/l	1.0	06/01/06 15:47	MSF	103-65-1		
Styrene	ND	ug/l	1.0	06/01/06 15:47	MSF	100-42-5		
1,1,1,2-Tetrachloroethane	ND	ug/l	1.0	06/01/06 15:47	MSF	630-20-6		
1,1,2,2-Tetrachloroethane	ND	ug/l	1.0	06/01/06 15:47	MSF	79-34-5		
Tetrachloroethene	ND	ug/l	1.0	06/01/06 15:47	MSF	127-18-4		
Toluene	11000	ug/l	250	06/01/06 15:47	MSF	108-88-3		
1,2,3-Trichlorobenzene	ND	ug/l	1.0	06/01/06 15:47	MSF	87-61-6		
1,2,4-Trichlorobenzene	ND	ug/l	1.0	06/01/06 15:47	MSF	120-82-1		
1,1,1-Trichloroethane	ND	ug/l	1.0	06/01/06 15:47	MSF	71-55-6		
1,1,2-Trichloroethane	ND	ug/l	1.0	06/01/06 15:47	MSF	79-00-5		
Trichloroethene	ND	ug/l	1.0	06/01/06 15:47	MSF	79-01-6		
Trichlorofluoromethane	ND	ug/l	1.0	06/01/06 15:47	MSF	75-69-4		
1,2,3-Trichloropropane	ND	ug/l	1.0	06/01/06 15:47	MSF	96-18-4		
1,2,4-Trimethylbenzene	ND	ug/l	1.0	06/01/06 15:47	MSF	95-63-6		
1,3,5-Trimethylbenzene	ND	ug/l	1.0	06/01/06 15:47	MSF	108-67-8		
Vinyl chloride	ND	ug/l	1.0	06/01/06 15:47	MSF	75-01-4		
Xylene (Total)	2.8	ug/l	1.0	06/01/06 15:47	MSF	1330-20-7		
m&p-Xylene	2.4	ug/l	2.0	06/01/06 15:47	MSF			
o-Xylene	ND	ug/l	1.0	06/01/06 15:47	MSF	95-47-6		
Toluene-d8 (S)	119	%		06/01/06 15:47	MSF	2037-26-5		
4-Bromofluorobenzene (S)	98	%		06/01/06 15:47	MSF	460-00-4		
Dibromofluoromethane (S)	101	%		06/01/06 15:47	MSF	1868-53-7		
1,2-Dichloroethane-d4 (S)	100	%		06/01/06 15:47	MSF	17060-07-0		

Pace Analytical
www.pacelabs.com

Pace Analytical Services, Inc.
9800 Kincey Avenue, Suite 100
Huntersville, NC 28078
Phone: 704.875.9092
Fax: 704.875.9091

Pace Analytical Services, Inc.
2225 Riverside Drive
Asheville, NC 28804
Phone: 828.254.7176
Fax: 828.252.4618

Lab Project Number: 92120131
Client Project ID: Wix/Affinia

Lab Sample No: 927028597
Client Sample ID: MW-3

Project Sample Number: 92120131-003
Matrix: Water

Date Collected: 05/24/06 16:45
Date Received: 05/26/06 09:30

Parameters	Results	Units	Report Limit	Analyzed	By	CAS No.	Qual	ReqLmt
GC/MS Volatiles								
GC/MS VOCs by 8260, low level	Method: EPA 8260							
Acetone	ND	ug/l	50000	06/03/06 04:20	MSF	67-64-1		
Benzene	ND	ug/l	2000	06/03/06 04:20	MSF	71-43-2		
Bromobenzene	ND	ug/l	2000	06/03/06 04:20	MSF	108-86-1		
Bromochloromethane	ND	ug/l	2000	06/03/06 04:20	MSF	74-97-5		
Bromodichloromethane	ND	ug/l	2000	06/03/06 04:20	MSF	75-27-4		
Bromoform	ND	ug/l	2000	06/03/06 04:20	MSF	75-25-2		
Bromomethane	ND	ug/l	2000	06/03/06 04:20	MSF	74-83-9		
2-Butanone (MEK)	ND	ug/l	10000	06/03/06 04:20	MSF	78-93-3		
n-Butylbenzene	ND	ug/l	2000	06/03/06 04:20	MSF	104-51-8		
sec-Butylbenzene	ND	ug/l	2000	06/03/06 04:20	MSF	135-98-8		
tert-Butylbenzene	ND	ug/l	2000	06/03/06 04:20	MSF	98-06-6		
Carbon tetrachloride	ND	ug/l	2000	06/03/06 04:20	MSF	56-23-5		
Chlorobenzene	ND	ug/l	2000	06/03/06 04:20	MSF	108-90-7		
Chloroethane	ND	ug/l	2000	06/03/06 04:20	MSF	75-00-3		
Chloroform	ND	ug/l	2000	06/03/06 04:20	MSF	67-66-3		
Chloromethane	ND	ug/l	2000	06/03/06 04:20	MSF	74-87-3		
2-Chlorotoluene	ND	ug/l	2000	06/03/06 04:20	MSF	95-49-8		
4-Chlorotoluene	ND	ug/l	2000	06/03/06 04:20	MSF	106-43-4		
1,2-Dibromo-3-chloropropane	ND	ug/l	2000	06/03/06 04:20	MSF	96-12-8		
Dibromochloromethane	ND	ug/l	2000	06/03/06 04:20	MSF	124-48-1		
1,2-Dibromoethane (EDB)	ND	ug/l	2000	06/03/06 04:20	MSF	106-93-4		
Dibromomethane	ND	ug/l	2000	06/03/06 04:20	MSF	74-95-3		
1,2-Dichlorobenzene	ND	ug/l	2000	06/03/06 04:20	MSF	95-50-1		
1,3-Dichlorobenzene	ND	ug/l	2000	06/03/06 04:20	MSF	541-73-1		
1,4-Dichlorobenzene	ND	ug/l	2000	06/03/06 04:20	MSF	106-46-7		
Dichlorodifluoromethane	ND	ug/l	2000	06/03/06 04:20	MSF	75-71-8		
1,1-Dichloroethane	ND	ug/l	2000	06/03/06 04:20	MSF	75-34-3		
1,2-Dichloroethane	ND	ug/l	2000	06/03/06 04:20	MSF	107-06-2		
1,2-Dichloroethene (Total)	ND	ug/l	1.0	06/03/06 04:20	MSF	540-59-0		
1,1-Dichloroethene	ND	ug/l	2000	06/03/06 04:20	MSF	75-35-4		
cis-1,2-Dichloroethene	ND	ug/l	2000	06/03/06 04:20	MSF	156-59-2		
trans-1,2-Dichloroethene	ND	ug/l	2000	06/03/06 04:20	MSF	156-60-5		
1,2-Dichloropropane	ND	ug/l	2000	06/03/06 04:20	MSF	78-87-5		
1,3-Dichloropropane	ND	ug/l	2000	06/03/06 04:20	MSF	142-28-9		
2,2-Dichloropropane	ND	ug/l	2000	06/03/06 04:20	MSF	594-20-7		
1,1-Dichloropropene	ND	ug/l	2000	06/03/06 04:20	MSF	563-58-6		
Diisopropyl ether	ND	ug/l	2000	06/03/06 04:20	MSF	108-20-3		

Pace Analytical
www.pacelabs.com

Pace Analytical Services, Inc.
9800 Kincey Avenue, Suite 100
Huntersville, NC 28078
Phone: 704.875.9092
Fax: 704.875.9091

Pace Analytical Services, Inc.
2225 Riverside Drive
Asheville, NC 28804
Phone: 828.254.7176
Fax: 828.252.4618

Lab Project Number: 92120131
Client Project ID: Wix/Affinia

Lab Sample No: 927028597 | Project Sample Number: 92120131-003 | Date Collected: 05/24/06 16:45
Client Sample ID: MW-3 | Matrix: Water | Date Received: 05/26/06 09:30

Parameters	Results	Units	Report Limit	Analyzed	By	CAS No.	Qual	RegLmt
Ethylbenzene	ND	ug/l	2000	06/03/06 04:20	MSF	100-41-4		
Hexachloro-1,3-butadiene	ND	ug/l	2000	06/03/06 04:20	MSF	87-68-3		
Isopropylbenzene (Cumene)	ND	ug/l	2000	06/03/06 04:20	MSF	98-82-8		
p-Isopropyltoluene	ND	ug/l	2000	06/03/06 04:20	MSF	99-87-6		
Methylene chloride	ND	ug/l	4000	06/03/06 04:20	MSF	75-09-2		
Methyl-tert-butyl ether	ND	ug/l	2000	06/03/06 04:20	MSF	1634-04-4		
Naphthalene	ND	ug/l	2000	06/03/06 04:20	MSF	91-20-3		
n-Propylbenzene	ND	ug/l	2000	06/03/06 04:20	MSF	103-65-1		
Styrene	ND	ug/l	2000	06/03/06 04:20	MSF	100-42-5		
1,1,1,2-Tetrachloroethane	ND	ug/l	2000	06/03/06 04:20	MSF	630-20-6		
1,1,2,2-Tetrachloroethane	ND	ug/l	2000	06/03/06 04:20	MSF	79-34-5		
Tetrachloroethene	ND	ug/l	2000	06/03/06 04:20	MSF	127-18-4		
Toluene	210000	ug/l	2000	06/03/06 04:20	MSF	108-88-3		
1,2,3-Trichlorobenzene	ND	ug/l	2000	06/03/06 04:20	MSF	87-61-6		
1,2,4-Trichlorobenzene	ND	ug/l	2000	06/03/06 04:20	MSF	120-82-1		
1,1,1-Trichloroethane	ND	ug/l	2000	06/03/06 04:20	MSF	71-55-6		
1,1,2-Trichloroethane	ND	ug/l	2000	06/03/06 04:20	MSF	79-00-5		
Trichloroethene	ND	ug/l	2000	06/03/06 04:20	MSF	79-01-6		
Trichlorofluoromethane	ND	ug/l	2000	06/03/06 04:20	MSF	75-69-4		
1,2,3-Trichloropropane	ND	ug/l	2000	06/03/06 04:20	MSF	96-18-4		
1,2,4-Trimethylbenzene	2100	ug/l	2000	06/03/06 04:20	MSF	95-63-6		
1,3,5-Trimethylbenzene	ND	ug/l	2000	06/03/06 04:20	MSF	108-67-8		
Vinyl chloride	ND	ug/l	2000	06/03/06 04:20	MSF	75-01-4		
Xylene (Total)	ND	ug/l	1.0	06/03/06 04:20	MSF	1330-20-7		
m&p-Xylene	ND	ug/l	4000	06/03/06 04:20	MSF			
o-Xylene	ND	ug/l	2000	06/03/06 04:20	MSF	95-47-6		
Toluene-d8 (S)	100	%		06/03/06 04:20	MSF	2037-26-5		
4-Bromofluorobenzene (S)	97	%		06/03/06 04:20	MSF	460-00-4		
Dibromofluoromethane (S)	114	%		06/03/06 04:20	MSF	1868-53-7		
1,2-Dichloroethane-d4 (S)	117	%		06/03/06 04:20	MSF	17060-07-0		

Pace Analytical
www.pacelabs.com

Pace Analytical Services, Inc.
9800 Kincey Avenue, Suite 100
Huntersville, NC 28078
Phone: 704.875.9092
Fax: 704.875.9091

Pace Analytical Services, Inc.
2225 Riverside Drive
Asheville, NC 28804
Phone: 828.254.7176
Fax: 828.252.4618

Lab Project Number: 92120131
Client Project ID: Wix/Affinia

Lab Sample No: 927028605 | Project Sample Number: 92120131-004 | Date Collected: 05/24/06 17:20
Client Sample ID: SW-1 | Matrix: Water | Date Received: 05/26/06 09:30

Parameters	Results	Units	Report Limit	Analyzed	By	CAS No.	Qual	RegLmt
GC/MS Volatiles								
GC/MS VOCs by 8260, low level	Method: EPA 8260							
Acetone	ND	ug/l	25.	06/01/06 14:59	MSF	67-64-1		
Benzene	ND	ug/l	1.0	06/01/06 14:59	MSF	71-43-2		
Bromobenzene	ND	ug/l	1.0	06/01/06 14:59	MSF	108-86-1		
Bromochloromethane	ND	ug/l	1.0	06/01/06 14:59	MSF	74-97-5		
Bromodichloromethane	ND	ug/l	1.0	06/01/06 14:59	MSF	75-27-4		
Bromoform	ND	ug/l	1.0	06/01/06 14:59	MSF	75-25-2		
Bromomethane	ND	ug/l	1.0	06/01/06 14:59	MSF	74-83-9		
2-Butanone (MEK)	ND	ug/l	5.0	06/01/06 14:59	MSF	78-93-3		
n-Butylbenzene	ND	ug/l	1.0	06/01/06 14:59	MSF	104-51-8		
sec-Butylbenzene	ND	ug/l	1.0	06/01/06 14:59	MSF	135-98-8		
tert-Butylbenzene	ND	ug/l	1.0	06/01/06 14:59	MSF	98-06-6		
Carbon tetrachloride	ND	ug/l	1.0	06/01/06 14:59	MSF	56-23-5		
Chlorobenzene	ND	ug/l	1.0	06/01/06 14:59	MSF	108-90-7		
Chloroethane	ND	ug/l	1.0	06/01/06 14:59	MSF	75-00-3		
Chloroform	ND	ug/l	1.0	06/01/06 14:59	MSF	67-66-3		
Chloromethane	ND	ug/l	1.0	06/01/06 14:59	MSF	74-87-3		
2-Chlorotoluene	ND	ug/l	1.0	06/01/06 14:59	MSF	95-49-8		
4-Chlorotoluene	ND	ug/l	1.0	06/01/06 14:59	MSF	106-43-4		
1,2-Dibromo-3-chloropropane	ND	ug/l	1.0	06/01/06 14:59	MSF	96-12-8		
Dibromochloromethane	ND	ug/l	1.0	06/01/06 14:59	MSF	124-48-1		
1,2-Dibromoethane (EDB)	ND	ug/l	1.0	06/01/06 14:59	MSF	106-93-4		
Dibromomethane	ND	ug/l	1.0	06/01/06 14:59	MSF	74-95-3		
1,2-Dichlorobenzene	ND	ug/l	1.0	06/01/06 14:59	MSF	95-50-1		
1,3-Dichlorobenzene	ND	ug/l	1.0	06/01/06 14:59	MSF	541-73-1		
1,4-Dichlorobenzene	ND	ug/l	1.0	06/01/06 14:59	MSF	106-46-7		
Dichlorodifluoromethane	ND	ug/l	1.0	06/01/06 14:59	MSF	75-71-8		
1,1-Dichloroethane	ND	ug/l	1.0	06/01/06 14:59	MSF	75-34-3		
1,2-Dichloroethane	ND	ug/l	1.0	06/01/06 14:59	MSF	107-06-2		
1,2-Dichloroethene (Total)	ND	ug/l	1.0	06/01/06 14:59	MSF	540-59-0		
1,1-Dichloroethene	ND	ug/l	1.0	06/01/06 14:59	MSF	75-35-4		
cis-1,2-Dichloroethene	ND	ug/l	1.0	06/01/06 14:59	MSF	156-59-2		
trans-1,2-Dichloroethene	ND	ug/l	1.0	06/01/06 14:59	MSF	156-60-5		
1,2-Dichloropropane	ND	ug/l	1.0	06/01/06 14:59	MSF	78-87-5		
1,3-Dichloropropane	ND	ug/l	1.0	06/01/06 14:59	MSF	142-28-9		
2,2-Dichloropropane	ND	ug/l	1.0	06/01/06 14:59	MSF	594-20-7		
1,1-Dichloropropene	ND	ug/l	1.0	06/01/06 14:59	MSF	563-58-6		
Diisopropyl ether	ND	ug/l	1.0	06/01/06 14:59	MSF	108-20-3		

Pace Analytical
www.pacelabs.com

Pace Analytical Services, Inc.
9800 Kincey Avenue, Suite 100
Huntersville, NC 28078
Phone: 704.875.9092
Fax: 704.875.9091

Pace Analytical Services, Inc.
2225 Riverside Drive
Asheville, NC 28804
Phone: 828.254.7176
Fax: 828.252.4618

Lab Project Number: 92120131
Client Project ID: Wix/Affinia

Lab Sample No: 927028605 | Project Sample Number: 92120131-004 | Date Collected: 05/24/06 17:20
Client Sample ID: SW-1 | Matrix: Water | Date Received: 05/26/06 09:30

Parameters	Results	Units	Report Limit	Analyzed	By	CAS No.	Qual	RegLmt
Ethylbenzene	ND	ug/l	1.0	06/01/06 14:59	MSF	100-41-4		
Hexachloro-1,3-butadiene	ND	ug/l	1.0	06/01/06 14:59	MSF	87-68-3		
Isopropylbenzene (Cumene)	ND	ug/l	1.0	06/01/06 14:59	MSF	98-82-8		
p-Isopropyltoluene	ND	ug/l	1.0	06/01/06 14:59	MSF	99-87-6		
Methylene chloride	ND	ug/l	2.0	06/01/06 14:59	MSF	75-09-2		
Methyl-tert-butyl ether	ND	ug/l	1.0	06/01/06 14:59	MSF	1634-04-4		
Naphthalene	ND	ug/l	1.0	06/01/06 14:59	MSF	91-20-3		
n-Propylbenzene	ND	ug/l	1.0	06/01/06 14:59	MSF	103-65-1		
Styrene	ND	ug/l	1.0	06/01/06 14:59	MSF	100-42-5		
1,1,1,2-Tetrachloroethane	ND	ug/l	1.0	06/01/06 14:59	MSF	630-20-6		
1,1,2,2-Tetrachloroethane	ND	ug/l	1.0	06/01/06 14:59	MSF	79-34-5		
Tetrachloroethene	ND	ug/l	1.0	06/01/06 14:59	MSF	127-18-4		
Toluene	ND	ug/l	1.0	06/01/06 14:59	MSF	108-88-3		
1,2,3-Trichlorobenzene	ND	ug/l	1.0	06/01/06 14:59	MSF	87-61-6		
1,2,4-Trichlorobenzene	ND	ug/l	1.0	06/01/06 14:59	MSF	120-82-1		
1,1,1-Trichloroethane	ND	ug/l	1.0	06/01/06 14:59	MSF	71-55-6		
1,1,2-Trichloroethane	ND	ug/l	1.0	06/01/06 14:59	MSF	79-00-5		
Trichloroethene	ND	ug/l	1.0	06/01/06 14:59	MSF	79-01-6		
Trichlorofluoromethane	ND	ug/l	1.0	06/01/06 14:59	MSF	75-69-4		
1,2,3-Trichloropropane	ND	ug/l	1.0	06/01/06 14:59	MSF	96-18-4		
1,2,4-Trimethylbenzene	ND	ug/l	1.0	06/01/06 14:59	MSF	95-63-6		
1,3,5-Trimethylbenzene	ND	ug/l	1.0	06/01/06 14:59	MSF	108-67-8		
Vinyl chloride	ND	ug/l	1.0	06/01/06 14:59	MSF	75-01-4		
Xylene (Total)	ND	ug/l	1.0	06/01/06 14:59	MSF	1330-20-7		
m&p-Xylene	ND	ug/l	2.0	06/01/06 14:59	MSF			
o-Xylene	ND	ug/l	1.0	06/01/06 14:59	MSF	95-47-6		
Toluene-d8 (S)	94	%		06/01/06 14:59	MSF	2037-26-5		
4-Bromofluorobenzene (S)	98	%		06/01/06 14:59	MSF	460-00-4		
Dibromofluoromethane (S)	104	%		06/01/06 14:59	MSF	1868-53-7		
1,2-Dichloroethane-d4 (S)	101	%		06/01/06 14:59	MSF	17060-07-0		

Pace Analytical
www.pacelabs.com

Pace Analytical Services, Inc.
9800 Kincey Avenue, Suite 100
Huntersville, NC 28078
Phone: 704.875.9092
Fax: 704.875.9091

Pace Analytical Services, Inc.
2225 Riverside Drive
Asheville, NC 28804
Phone: 828.254.7176
Fax: 828.252.4618

Lab Project Number: 92120131
Client Project ID: Wix/Affinia

Lab Sample No: 927028613
Client Sample ID: SED-1

Project Sample Number: 92120131-005
Matrix: Soil

Date Collected: 05/24/06 17:25
Date Received: 05/26/06 09:30

Parameters	Results	Units	Report Limit	Analyzed	By	CAS No.	Qual	RegLmt
Wet Chemistry								
Percent Moisture	Method: % Moisture							
Percent Moisture	18.5	%		05/26/06 13:31	KDF			
GC/MS Volatiles								
GC/MS VOCs 5035/8260 low level	Method: EPA 8260							
Acetone	120	ug/kg	92.	06/07/06 14:01	DLK	67-64-1	2	
Benzene	ND	ug/kg	4.6	06/07/06 14:01	DLK	71-43-2		
Bromobenzene	ND	ug/kg	4.6	06/07/06 14:01	DLK	108-86-1		
Bromochloromethane	ND	ug/kg	4.6	06/07/06 14:01	DLK	74-97-5		
Bromodichloromethane	ND	ug/kg	4.6	06/07/06 14:01	DLK	75-27-4		
Bromoform	ND	ug/kg	4.6	06/07/06 14:01	DLK	75-25-2		
Bromomethane	ND	ug/kg	9.2	06/07/06 14:01	DLK	74-83-9		
2-Butanone (MEK)	ND	ug/kg	92.	06/07/06 14:01	DLK	78-93-3		
n-Butylbenzene	ND	ug/kg	4.6	06/07/06 14:01	DLK	104-51-8		
sec-Butylbenzene	ND	ug/kg	4.6	06/07/06 14:01	DLK	135-98-8		
tert-Butylbenzene	ND	ug/kg	4.6	06/07/06 14:01	DLK	98-06-6		
Carbon tetrachloride	ND	ug/kg	4.6	06/07/06 14:01	DLK	56-23-5		
Chlorobenzene	ND	ug/kg	4.6	06/07/06 14:01	DLK	108-90-7		
Chloroethane	ND	ug/kg	9.2	06/07/06 14:01	DLK	75-00-3		
Chloroform	ND	ug/kg	4.6	06/07/06 14:01	DLK	67-66-3		
Chloromethane	ND	ug/kg	9.2	06/07/06 14:01	DLK	74-87-3		
2-Chlorotoluene	ND	ug/kg	4.6	06/07/06 14:01	DLK	95-49-8		
4-Chlorotoluene	ND	ug/kg	4.6	06/07/06 14:01	DLK	106-43-4		
1,2-Dibromo-3-chloropropane	ND	ug/kg	4.6	06/07/06 14:01	DLK	96-12-8		
Dibromochloromethane	ND	ug/kg	4.6	06/07/06 14:01	DLK	124-48-1		
1,2-Dibromoethane (EDB)	ND	ug/kg	4.6	06/07/06 14:01	DLK	106-93-4		
Dibromomethane	ND	ug/kg	4.6	06/07/06 14:01	DLK	74-95-3		
1,2-Dichlorobenzene	ND	ug/kg	4.6	06/07/06 14:01	DLK	95-50-1		
1,3-Dichlorobenzene	ND	ug/kg	4.6	06/07/06 14:01	DLK	541-73-1		
1,4-Dichlorobenzene	ND	ug/kg	4.6	06/07/06 14:01	DLK	106-46-7		
Dichlorodifluoromethane	ND	ug/kg	9.2	06/07/06 14:01	DLK	75-71-8		
1,1-Dichloroethane	ND	ug/kg	4.6	06/07/06 14:01	DLK	75-34-3		
1,2-Dichloroethane	ND	ug/kg	4.6	06/07/06 14:01	DLK	107-06-2		
1,1-Dichloroethene	ND	ug/kg	4.6	06/07/06 14:01	DLK	75-35-4		
cis-1,2-Dichloroethene	ND	ug/kg	4.6	06/07/06 14:01	DLK	156-59-2		
trans-1,2-Dichloroethene	ND	ug/kg	4.6	06/07/06 14:01	DLK	156-60-5		
1,2-Dichloropropane	ND	ug/kg	4.6	06/07/06 14:01	DLK	78-87-5		
1,3-Dichloropropane	ND	ug/kg	4.6	06/07/06 14:01	DLK	142-28-9		

Pace Analytical
www.pacelabs.com

Pace Analytical Services, Inc.
9800 Kincey Avenue, Suite 100
Huntersville, NC 28078
Phone: 704.875.9092
Fax: 704.875.9091

Pace Analytical Services, Inc.
2225 Riverside Drive
Asheville, NC 28804
Phone: 828.254.7176
Fax: 828.252.4618

Lab Project Number: 92120131
Client Project ID: Wix/Affinia

Lab Sample No: 927028613 | Project Sample Number: 92120131-005 | Date Collected: 05/24/06 17:25
Client Sample ID: SED-1 | Matrix: Soil | Date Received: 05/26/06 09:30

Parameters	Results	Units	Report Limit	Analyzed	By	CAS No.	Qual	RegLmt
2,2-Dichloropropane	ND	ug/kg	4.6	06/07/06 14:01	DLK	594-20-7		
1,1-Dichloropropene	ND	ug/kg	4.6	06/07/06 14:01	DLK	563-58-6		
cis-1,3-Dichloropropene	ND	ug/kg	4.6	06/07/06 14:01	DLK	10061-01-5		
trans-1,3-Dichloropropene	ND	ug/kg	4.6	06/07/06 14:01	DLK	10061-02-6		
Diisopropyl ether	ND	ug/kg	4.6	06/07/06 14:01	DLK	108-20-3		
Ethylbenzene	ND	ug/kg	4.6	06/07/06 14:01	DLK	100-41-4		
Hexachloro-1,3-butadiene	ND	ug/kg	4.6	06/07/06 14:01	DLK	87-68-3		
2-Hexanone	ND	ug/kg	46.	06/07/06 14:01	DLK	591-78-6		
Isopropylbenzene (Cumene)	ND	ug/kg	4.6	06/07/06 14:01	DLK	98-82-8		
p-Isopropyltoluene	4.9	ug/kg	4.6	06/07/06 14:01	DLK	99-87-6		
Methylene chloride	ND	ug/kg	4.6	06/07/06 14:01	DLK	75-09-2		
4-Methyl-2-pentanone (MIBK)	ND	ug/kg	46.	06/07/06 14:01	DLK	108-10-1		
Methyl-tert-butyl ether	ND	ug/kg	4.6	06/07/06 14:01	DLK	1634-04-4		
Naphthalene	ND	ug/kg	4.6	06/07/06 14:01	DLK	91-20-3		
n-Propylbenzene	ND	ug/kg	4.6	06/07/06 14:01	DLK	103-65-1		
Styrene	ND	ug/kg	4.6	06/07/06 14:01	DLK	100-42-5		
1,1,1,2-Tetrachloroethane	ND	ug/kg	4.6	06/07/06 14:01	DLK	630-20-6		
1,1,2,2-Tetrachloroethane	ND	ug/kg	4.6	06/07/06 14:01	DLK	79-34-5		
Tetrachloroethene	ND	ug/kg	4.6	06/07/06 14:01	DLK	127-18-4		
Toluene	ND	ug/kg	4.6	06/07/06 14:01	DLK	108-88-3		
1,2,3-Trichlorobenzene	ND	ug/kg	4.6	06/07/06 14:01	DLK	87-61-6		
1,2,4-Trichlorobenzene	ND	ug/kg	4.6	06/07/06 14:01	DLK	120-82-1		
1,1,1-Trichloroethane	ND	ug/kg	4.6	06/07/06 14:01	DLK	71-55-6		
1,1,2-Trichloroethane	ND	ug/kg	4.6	06/07/06 14:01	DLK	79-00-5		
Trichloroethene	ND	ug/kg	4.6	06/07/06 14:01	DLK	79-01-6		
Trichlorofluoromethane	ND	ug/kg	4.6	06/07/06 14:01	DLK	75-69-4		
1,2,3-Trichloropropane	ND	ug/kg	4.6	06/07/06 14:01	DLK	96-18-4		
1,2,4-Trimethylbenzene	ND	ug/kg	4.6	06/07/06 14:01	DLK	95-63-6		
1,3,5-Trimethylbenzene	ND	ug/kg	4.6	06/07/06 14:01	DLK	108-67-8		
Vinyl acetate	ND	ug/kg	46.	06/07/06 14:01	DLK	108-05-4		
Vinyl chloride	ND	ug/kg	9.2	06/07/06 14:01	DLK	75-01-4		
Xylene (Total)	ND	ug/kg	4.6	06/07/06 14:01	DLK	1330-20-7		
m&p-Xylene	ND	ug/kg	9.2	06/07/06 14:01	DLK			
o-Xylene	ND	ug/kg	4.6	06/07/06 14:01	DLK	95-47-6		
Toluene-d8 (S)	95	%		06/07/06 14:01	DLK	2037-26-5		
4-Bromofluorobenzene (S)	83	%		06/07/06 14:01	DLK	460-00-4		
Dibromofluoromethane (S)	98	%		06/07/06 14:01	DLK	1868-53-7		
1,2-Dichloroethane-d4 (S)	96	%		06/07/06 14:01	DLK	17060-07-0		

Pace Analytical
www.pacelabs.com

Pace Analytical Services, Inc.
9800 Kincey Avenue, Suite 100
Huntersville, NC 28078
Phone: 704.875.9092
Fax: 704.875.9091

Pace Analytical Services, Inc.
2225 Riverside Drive
Asheville, NC 28804
Phone: 828.254.7176
Fax: 828.252.4618

Lab Project Number: 92120131
Client Project ID: Wix/Affinia

Lab Sample No: 927028621 | Project Sample Number: 92120131-006 | Date Collected: 05/24/06 15:35
Client Sample ID: SED-2 | Matrix: Soil | Date Received: 05/26/06 09:30

Parameters	Results	Units	Report Limit	Analyzed	By	CAS No.	Qual	RegLmt
Wet Chemistry								
Percent Moisture	Method: % Moisture							
Percent Moisture	28.5	%		05/26/06 13:31	KDF			
GC/MS Volatiles								
GC/MS VOCs 5035/8260 low level	Method: EPA 8260							
Acetone	ND	ug/kg	110	06/07/06 13:43	DLK	67-64-1		
Benzene	ND	ug/kg	5.3	06/07/06 13:43	DLK	71-43-2		
Bromobenzene	ND	ug/kg	5.3	06/07/06 13:43	DLK	108-86-1		
Bromochloromethane	ND	ug/kg	5.3	06/07/06 13:43	DLK	74-97-5		
Bromodichloromethane	ND	ug/kg	5.3	06/07/06 13:43	DLK	75-27-4		
Bromoform	ND	ug/kg	5.3	06/07/06 13:43	DLK	75-25-2		
Bromomethane	ND	ug/kg	11.	06/07/06 13:43	DLK	74-83-9		
2-Butanone (MEK)	ND	ug/kg	110	06/07/06 13:43	DLK	78-93-3		
n-Butylbenzene	ND	ug/kg	5.3	06/07/06 13:43	DLK	104-51-8		
sec-Butylbenzene	ND	ug/kg	5.3	06/07/06 13:43	DLK	135-98-8		
tert-Butylbenzene	ND	ug/kg	5.3	06/07/06 13:43	DLK	98-06-6		
Carbon tetrachloride	ND	ug/kg	5.3	06/07/06 13:43	DLK	56-23-5		
Chlorobenzene	ND	ug/kg	5.3	06/07/06 13:43	DLK	108-90-7		
Chloroethane	ND	ug/kg	11.	06/07/06 13:43	DLK	75-00-3		
Chloroform	ND	ug/kg	5.3	06/07/06 13:43	DLK	67-66-3		
Chloromethane	ND	ug/kg	11.	06/07/06 13:43	DLK	74-87-3		
2-Chlorotoluene	ND	ug/kg	5.3	06/07/06 13:43	DLK	95-49-8		
4-Chlorotoluene	ND	ug/kg	5.3	06/07/06 13:43	DLK	106-43-4		
1,2-Dibromo-3-chloropropane	ND	ug/kg	5.3	06/07/06 13:43	DLK	96-12-8		
Dibromochloromethane	ND	ug/kg	5.3	06/07/06 13:43	DLK	124-48-1		
1,2-Dibromoethane (EDB)	ND	ug/kg	5.3	06/07/06 13:43	DLK	106-93-4		
Dibromomethane	ND	ug/kg	5.3	06/07/06 13:43	DLK	74-95-3		
1,2-Dichlorobenzene	ND	ug/kg	5.3	06/07/06 13:43	DLK	95-50-1		
1,3-Dichlorobenzene	ND	ug/kg	5.3	06/07/06 13:43	DLK	541-73-1		
1,4-Dichlorobenzene	ND	ug/kg	5.3	06/07/06 13:43	DLK	106-46-7		
Dichlorodifluoromethane	ND	ug/kg	11.	06/07/06 13:43	DLK	75-71-8		
1,1-Dichloroethane	ND	ug/kg	5.3	06/07/06 13:43	DLK	75-34-3		
1,2-Dichloroethane	ND	ug/kg	5.3	06/07/06 13:43	DLK	107-06-2		
1,1-Dichloroethene	ND	ug/kg	5.3	06/07/06 13:43	DLK	75-35-4		
cis-1,2-Dichloroethene	ND	ug/kg	5.3	06/07/06 13:43	DLK	156-59-2		
trans-1,2-Dichloroethene	ND	ug/kg	5.3	06/07/06 13:43	DLK	156-60-5		
1,2-Dichloropropane	ND	ug/kg	5.3	06/07/06 13:43	DLK	78-87-5		
1,3-Dichloropropane	ND	ug/kg	5.3	06/07/06 13:43	DLK	142-28-9		

Pace Analytical
www.pacelabs.com

Pace Analytical Services, Inc.
9800 Kincey Avenue, Suite 100
Huntersville, NC 28078
Phone: 704.875.9092
Fax: 704.875.9091

Pace Analytical Services, Inc.
2225 Riverside Drive
Asheville, NC 28804
Phone: 828.254.7176
Fax: 828.252.4618

Lab Project Number: 92120131
Client Project ID: Wix/Affinia

Lab Sample No: 927028621 | Project Sample Number: 92120131-006 | Date Collected: 05/24/06 15:35
Client Sample ID: SED-2 | Matrix: Soil | Date Received: 05/26/06 09:30

Parameters	Results	Units	Report Limit	Analyzed	By	CAS No.	Qual	RegLmt
2,2-Dichloropropane	ND	ug/kg	5.3	06/07/06 13:43	DLK	594-20-7		
1,1-Dichloropropene	ND	ug/kg	5.3	06/07/06 13:43	DLK	563-58-6		
cis-1,3-Dichloropropene	ND	ug/kg	5.3	06/07/06 13:43	DLK	10061-01-5		
trans-1,3-Dichloropropene	ND	ug/kg	5.3	06/07/06 13:43	DLK	10061-02-6		
Diisopropyl ether	ND	ug/kg	5.3	06/07/06 13:43	DLK	108-20-3		
Ethylbenzene	ND	ug/kg	5.3	06/07/06 13:43	DLK	100-41-4		
Hexachloro-1,3-butadiene	ND	ug/kg	5.3	06/07/06 13:43	DLK	87-68-3		
2-Hexanone	ND	ug/kg	53.	06/07/06 13:43	DLK	591-78-6		
Isopropylbenzene (Cumene)	ND	ug/kg	5.3	06/07/06 13:43	DLK	98-82-8		
p-Isopropyltoluene	ND	ug/kg	5.3	06/07/06 13:43	DLK	99-87-6		
Methylene chloride	ND	ug/kg	5.3	06/07/06 13:43	DLK	75-09-2		
4-Methyl-2-pentanone (MIBK)	ND	ug/kg	53.	06/07/06 13:43	DLK	108-10-1		
Methyl-tert-butyl ether	ND	ug/kg	5.3	06/07/06 13:43	DLK	1634-04-4		
Naphthalene	ND	ug/kg	5.3	06/07/06 13:43	DLK	91-20-3		
n-Propylbenzene	ND	ug/kg	5.3	06/07/06 13:43	DLK	103-65-1		
Styrene	ND	ug/kg	5.3	06/07/06 13:43	DLK	100-42-5		
1,1,1,2-Tetrachloroethane	ND	ug/kg	5.3	06/07/06 13:43	DLK	630-20-6		
1,1,2,2-Tetrachloroethane	ND	ug/kg	5.3	06/07/06 13:43	DLK	79-34-5		
Tetrachloroethene	ND	ug/kg	5.3	06/07/06 13:43	DLK	127-18-4		
Toluene	ND	ug/kg	5.3	06/07/06 13:43	DLK	108-88-3		
1,2,3-Trichlorobenzene	ND	ug/kg	5.3	06/07/06 13:43	DLK	87-61-6		
1,2,4-Trichlorobenzene	ND	ug/kg	5.3	06/07/06 13:43	DLK	120-82-1		
1,1,1-Trichloroethane	ND	ug/kg	5.3	06/07/06 13:43	DLK	71-55-6		
1,1,2-Trichloroethane	ND	ug/kg	5.3	06/07/06 13:43	DLK	79-00-5		
Trichloroethene	ND	ug/kg	5.3	06/07/06 13:43	DLK	79-01-6		
Trichlorofluoromethane	ND	ug/kg	5.3	06/07/06 13:43	DLK	75-69-4		
1,2,3-Trichloropropane	ND	ug/kg	5.3	06/07/06 13:43	DLK	96-18-4		
1,2,4-Trimethylbenzene	ND	ug/kg	5.3	06/07/06 13:43	DLK	95-63-6		
1,3,5-Trimethylbenzene	ND	ug/kg	5.3	06/07/06 13:43	DLK	108-67-8		
Vinyl acetate	ND	ug/kg	53.	06/07/06 13:43	DLK	108-05-4		
Vinyl chloride	ND	ug/kg	11.	06/07/06 13:43	DLK	75-01-4		
Xylene (Total)	ND	ug/kg	5.3	06/07/06 13:43	DLK	1330-20-7		
m&p-Xylene	ND	ug/kg	11.	06/07/06 13:43	DLK			
o-Xylene	ND	ug/kg	5.3	06/07/06 13:43	DLK	95-47-6		
Toluene-d8 (S)	98	%		06/07/06 13:43	DLK	2037-26-5		
4-Bromofluorobenzene (S)	93	%		06/07/06 13:43	DLK	460-00-4		
Dibromofluoromethane (S)	91	%		06/07/06 13:43	DLK	1868-53-7		
1,2-Dichloroethane-d4 (S)	88	%		06/07/06 13:43	DLK	17060-07-0		

Pace Analytical
www.pacelabs.com

Pace Analytical Services, Inc.
9800 Kincey Avenue, Suite 100
Huntersville, NC 28078
Phone: 704.875.9092
Fax: 704.875.9091

Pace Analytical Services, Inc.
2225 Riverside Drive
Asheville, NC 28804
Phone: 828.254.7176
Fax: 828.252.4618

Lab Project Number: 92120131
Client Project ID: Wix/Affinia

Lab Sample No: 927028639 | Project Sample Number: 92120131-007 | Date Collected: 05/24/06 15:40
Client Sample ID: SW-2 | Matrix: Water | Date Received: 05/26/06 09:30

GC/MS Volatiles

GC/MS VOCs by 8260, low level — Method: EPA 8260

Parameters	Results	Units	Report Limit	Analyzed	By	CAS No.	Qual	RegLmt
Acetone	ND	ug/l	25.	06/05/06 15:40	MCK	67-64-1		
Benzene	ND	ug/l	1.0	06/05/06 15:40	MCK	71-43-2		
Bromobenzene	ND	ug/l	1.0	06/05/06 15:40	MCK	108-86-1		
Bromochloromethane	ND	ug/l	1.0	06/05/06 15:40	MCK	74-97-5		
Bromodichloromethane	ND	ug/l	1.0	06/05/06 15:40	MCK	75-27-4		
Bromoform	ND	ug/l	1.0	06/05/06 15:40	MCK	75-25-2		
Bromomethane	ND	ug/l	1.0	06/05/06 15:40	MCK	74-83-9		
2-Butanone (MEK)	ND	ug/l	5.0	06/05/06 15:40	MCK	78-93-3		
n-Butylbenzene	ND	ug/l	1.0	06/05/06 15:40	MCK	104-51-8		
sec-Butylbenzene	ND	ug/l	1.0	06/05/06 15:40	MCK	135-98-8		
tert-Butylbenzene	ND	ug/l	1.0	06/05/06 15:40	MCK	98-06-6		
Carbon tetrachloride	ND	ug/l	1.0	06/05/06 15:40	MCK	56-23-5		
Chlorobenzene	ND	ug/l	1.0	06/05/06 15:40	MCK	108-90-7		
Chloroethane	ND	ug/l	1.0	06/05/06 15:40	MCK	75-00-3		
Chloroform	ND	ug/l	1.0	06/05/06 15:40	MCK	67-66-3		
Chloromethane	ND	ug/l	1.0	06/05/06 15:40	MCK	74-87-3		
2-Chlorotoluene	ND	ug/l	1.0	06/05/06 15:40	MCK	95-49-8		
4-Chlorotoluene	ND	ug/l	1.0	06/05/06 15:40	MCK	106-43-4		
1,2-Dibromo-3-chloropropane	ND	ug/l	1.0	06/05/06 15:40	MCK	96-12-8		
Dibromochloromethane	ND	ug/l	1.0	06/05/06 15:40	MCK	124-48-1		
1,2-Dibromoethane (EDB)	ND	ug/l	1.0	06/05/06 15:40	MCK	106-93-4		
Dibromomethane	ND	ug/l	1.0	06/05/06 15:40	MCK	74-95-3		
1,2-Dichlorobenzene	ND	ug/l	1.0	06/05/06 15:40	MCK	95-50-1		
1,3-Dichlorobenzene	ND	ug/l	1.0	06/05/06 15:40	MCK	541-73-1		
1,4-Dichlorobenzene	ND	ug/l	1.0	06/05/06 15:40	MCK	106-46-7		
Dichlorodifluoromethane	ND	ug/l	1.0	06/05/06 15:40	MCK	75-71-8		
1,1-Dichloroethane	ND	ug/l	1.0	06/05/06 15:40	MCK	75-34-3		
1,2-Dichloroethane	ND	ug/l	1.0	06/05/06 15:40	MCK	107-06-2		
1,2-Dichloroethene (Total)	ND	ug/l	1.0	06/05/06 15:40	MCK	540-59-0		
1,1-Dichloroethene	ND	ug/l	1.0	06/05/06 15:40	MCK	75-35-4		
cis-1,2-Dichloroethene	ND	ug/l	1.0	06/05/06 15:40	MCK	156-59-2		
trans-1,2-Dichloroethene	ND	ug/l	1.0	06/05/06 15:40	MCK	156-60-5		
1,2-Dichloropropane	ND	ug/l	1.0	06/05/06 15:40	MCK	78-87-5		
1,3-Dichloropropane	ND	ug/l	1.0	06/05/06 15:40	MCK	142-28-9		
2,2-Dichloropropane	ND	ug/l	1.0	06/05/06 15:40	MCK	594-20-7		
1,1-Dichloropropene	ND	ug/l	1.0	06/05/06 15:40	MCK	563-58-6		
Diisopropyl ether	ND	ug/l	1.0	06/05/06 15:40	MCK	108-20-3		

Pace Analytical
www.pacelabs.com

Pace Analytical Services, Inc.
9800 Kincey Avenue, Suite 100
Huntersville, NC 28078
Phone: 704.875.9092
Fax: 704.875.9091

Pace Analytical Services, Inc.
2225 Riverside Drive
Asheville, NC 28804
Phone: 828.254.7176
Fax: 828.252.4618

Lab Project Number: 92120131
Client Project ID: Wix/Affinia

Lab Sample No: 927028639 Project Sample Number: 92120131-007 Date Collected: 05/24/06 15:40
Client Sample ID: SW-2 Matrix: Water Date Received: 05/26/06 09:30

Parameters	Results	Units	Report Limit	Analyzed	By	CAS No.	Qual	RegLmt
Ethylbenzene	ND	ug/l	1.0	06/05/06 15:40	MCK	100-41-4		
Hexachloro-1,3-butadiene	ND	ug/l	1.0	06/05/06 15:40	MCK	87-68-3		
Isopropylbenzene (Cumene)	ND	ug/l	1.0	06/05/06 15:40	MCK	98-82-8		
p-Isopropyltoluene	ND	ug/l	1.0	06/05/06 15:40	MCK	99-87-6		
Methylene chloride	ND	ug/l	2.0	06/05/06 15:40	MCK	75-09-2		
Methyl-tert-butyl ether	ND	ug/l	1.0	06/05/06 15:40	MCK	1634-04-4		
Naphthalene	ND	ug/l	1.0	06/05/06 15:40	MCK	91-20-3		
n-Propylbenzene	ND	ug/l	1.0	06/05/06 15:40	MCK	103-65-1		
Styrene	ND	ug/l	1.0	06/05/06 15:40	MCK	100-42-5		
1,1,1,2-Tetrachloroethane	ND	ug/l	1.0	06/05/06 15:40	MCK	630-20-6		
1,1,2,2-Tetrachloroethane	ND	ug/l	1.0	06/05/06 15:40	MCK	79-34-5		
Tetrachloroethene	ND	ug/l	1.0	06/05/06 15:40	MCK	127-18-4		
Toluene	ND	ug/l	1.0	06/05/06 15:40	MCK	108-88-3		
1,2,3-Trichlorobenzene	ND	ug/l	1.0	06/05/06 15:40	MCK	87-61-6		
1,2,4-Trichlorobenzene	ND	ug/l	1.0	06/05/06 15:40	MCK	120-82-1		
1,1,1-Trichloroethane	ND	ug/l	1.0	06/05/06 15:40	MCK	71-55-6		
1,1,2-Trichloroethane	ND	ug/l	1.0	06/05/06 15:40	MCK	79-00-5		
Trichloroethene	ND	ug/l	1.0	06/05/06 15:40	MCK	79-01-6		
Trichlorofluoromethane	ND	ug/l	1.0	06/05/06 15:40	MCK	75-69-4		
1,2,3-Trichloropropane	ND	ug/l	1.0	06/05/06 15:40	MCK	96-18-4		
1,2,4-Trimethylbenzene	ND	ug/l	1.0	06/05/06 15:40	MCK	95-63-6		
1,3,5-Trimethylbenzene	ND	ug/l	1.0	06/05/06 15:40	MCK	108-67-8		
Vinyl chloride	ND	ug/l	1.0	06/05/06 15:40	MCK	75-01-4		
Xylene (Total)	ND	ug/l	1.0	06/05/06 15:40	MCK	1330-20-7		
m&p-Xylene	ND	ug/l	2.0	06/05/06 15:40	MCK			
o-Xylene	ND	ug/l	1.0	06/05/06 15:40	MCK	95-47-6		
Toluene-d8 (S)	101	%		06/05/06 15:40	MCK	2037-26-5		
4-Bromofluorobenzene (S)	97	%		06/05/06 15:40	MCK	460-00-4		
Dibromofluoromethane (S)	96	%		06/05/06 15:40	MCK	1868-53-7		
1,2-Dichloroethane-d4 (S)	95	%		06/05/06 15:40	MCK	17060-07-0		

Pace Analytical
www.pacelabs.com

Pace Analytical Services, Inc.
9800 Kincey Avenue, Suite 100
Huntersville, NC 28078
Phone: 704.875.9092
Fax: 704.875.9091

Pace Analytical Services, Inc.
2225 Riverside Drive
Asheville, NC 28804
Phone: 828.254.7176
Fax: 828.252.4618

Lab Project Number: 92120131
Client Project ID: Wix/Affinia

Lab Sample No: 927028647 | Project Sample Number: 92120131-008 | Date Collected: 05/24/06 10:30
Client Sample ID: DUP-1 | Matrix: Water | Date Received: 05/26/06 09:30

Parameters	Results	Units	Report Limit	Analyzed	By	CAS No.	Qual	RegLmt
GC/MS Volatiles								
GC/MS VOCs by 8260, low level	Method: EPA 8260							
Acetone	ND	ug/l	50000	06/03/06 04:45	MSF	67-64-1		
Benzene	ND	ug/l	2000	06/03/06 04:45	MSF	71-43-2		
Bromobenzene	ND	ug/l	2000	06/03/06 04:45	MSF	108-86-1		
Bromochloromethane	ND	ug/l	2000	06/03/06 04:45	MSF	74-97-5		
Bromodichloromethane	ND	ug/l	2000	06/03/06 04:45	MSF	75-27-4		
Bromoform	ND	ug/l	2000	06/03/06 04:45	MSF	75-25-2		
Bromomethane	ND	ug/l	2000	06/03/06 04:45	MSF	74-83-9		
2-Butanone (MEK)	ND	ug/l	10000	06/03/06 04:45	MSF	78-93-3		
n-Butylbenzene	ND	ug/l	2000	06/03/06 04:45	MSF	104-51-8		
sec-Butylbenzene	ND	ug/l	2000	06/03/06 04:45	MSF	135-98-8		
tert-Butylbenzene	ND	ug/l	2000	06/03/06 04:45	MSF	98-06-6		
Carbon tetrachloride	ND	ug/l	2000	06/03/06 04:45	MSF	56-23-5		
Chlorobenzene	ND	ug/l	2000	06/03/06 04:45	MSF	108-90-7		
Chloroethane	ND	ug/l	2000	06/03/06 04:45	MSF	75-00-3		
Chloroform	ND	ug/l	2000	06/03/06 04:45	MSF	67-66-3		
Chloromethane	ND	ug/l	2000	06/03/06 04:45	MSF	74-87-3		
2-Chlorotoluene	ND	ug/l	2000	06/03/06 04:45	MSF	95-49-8		
4-Chlorotoluene	ND	ug/l	2000	06/03/06 04:45	MSF	106-43-4		
1,2-Dibromo-3-chloropropane	ND	ug/l	2000	06/03/06 04:45	MSF	96-12-8		
Dibromochloromethane	ND	ug/l	2000	06/03/06 04:45	MSF	124-48-1		
1,2-Dibromoethane (EDB)	ND	ug/l	2000	06/03/06 04:45	MSF	106-93-4		
Dibromomethane	ND	ug/l	2000	06/03/06 04:45	MSF	74-95-3		
1,2-Dichlorobenzene	ND	ug/l	2000	06/03/06 04:45	MSF	95-50-1		
1,3-Dichlorobenzene	ND	ug/l	2000	06/03/06 04:45	MSF	541-73-1		
1,4-Dichlorobenzene	ND	ug/l	2000	06/03/06 04:45	MSF	106-46-7		
Dichlorodifluoromethane	ND	ug/l	2000	06/03/06 04:45	MSF	75-71-8		
1,1-Dichloroethane	ND	ug/l	2000	06/03/06 04:45	MSF	75-34-3		
1,2-Dichloroethane	ND	ug/l	2000	06/03/06 04:45	MSF	107-06-2		
1,2-Dichloroethene (Total)	ND	ug/l	1.0	06/03/06 04:45	MSF	540-59-0		
1,1-Dichloroethene	ND	ug/l	2000	06/03/06 04:45	MSF	75-35-4		
cis-1,2-Dichloroethene	ND	ug/l	2000	06/03/06 04:45	MSF	156-59-2		
trans-1,2-Dichloroethene	ND	ug/l	2000	06/03/06 04:45	MSF	156-60-5		
1,2-Dichloropropane	ND	ug/l	2000	06/03/06 04:45	MSF	78-87-5		
1,3-Dichloropropane	ND	ug/l	2000	06/03/06 04:45	MSF	142-28-9		
2,2-Dichloropropane	ND	ug/l	2000	06/03/06 04:45	MSF	594-20-7		
1,1-Dichloropropene	ND	ug/l	2000	06/03/06 04:45	MSF	563-58-6		
Diisopropyl ether	ND	ug/l	2000	06/03/06 04:45	MSF	108-20-3		

Pace Analytical
www.pacelabs.com

Pace Analytical Services, Inc.
9800 Kincey Avenue, Suite 100
Huntersville, NC 28078
Phone: 704.875.9092
Fax: 704.875.9091

Pace Analytical Services, Inc.
2225 Riverside Drive
Asheville, NC 28804
Phone: 828.254.7176
Fax: 828.252.4618

Lab Project Number: 92120131
Client Project ID: Wix/Affinia

Lab Sample No: 927028647
Client Sample ID: DUP-1

Project Sample Number: 92120131-008
Matrix: Water

Date Collected: 05/24/06 10:30
Date Received: 05/26/06 09:30

Parameters	Results	Units	Report Limit	Analyzed	By	CAS No.	Qual	RegLmt
Ethylbenzene	ND	ug/l	2000	06/03/06 04:45	MSF	100-41-4		
Hexachloro-1,3-butadiene	ND	ug/l	2000	06/03/06 04:45	MSF	87-68-3		
Isopropylbenzene (Cumene)	ND	ug/l	2000	06/03/06 04:45	MSF	98-82-8		
p-Isopropyltoluene	ND	ug/l	2000	06/03/06 04:45	MSF	99-87-6		
Methylene chloride	ND	ug/l	4000	06/03/06 04:45	MSF	75-09-2		
Methyl-tert-butyl ether	ND	ug/l	2000	06/03/06 04:45	MSF	1634-04-4		
Naphthalene	ND	ug/l	2000	06/03/06 04:45	MSF	91-20-3		
n-Propylbenzene	ND	ug/l	2000	06/03/06 04:45	MSF	103-65-1		
Styrene	ND	ug/l	2000	06/03/06 04:45	MSF	100-42-5		
1,1,1,2-Tetrachloroethane	ND	ug/l	2000	06/03/06 04:45	MSF	630-20-6		
1,1,2,2-Tetrachloroethane	ND	ug/l	2000	06/03/06 04:45	MSF	79-34-5		
Tetrachloroethene	ND	ug/l	2000	06/03/06 04:45	MSF	127-18-4		
Toluene	220000	ug/l	2000	06/03/06 04:45	MSF	108-88-3		
1,2,3-Trichlorobenzene	ND	ug/l	2000	06/03/06 04:45	MSF	87-61-6		
1,2,4-Trichlorobenzene	ND	ug/l	2000	06/03/06 04:45	MSF	120-82-1		
1,1,1-Trichloroethane	ND	ug/l	2000	06/03/06 04:45	MSF	71-55-6		
1,1,2-Trichloroethane	ND	ug/l	2000	06/03/06 04:45	MSF	79-00-5		
Trichloroethene	ND	ug/l	2000	06/03/06 04:45	MSF	79-01-6		
Trichlorofluoromethane	ND	ug/l	2000	06/03/06 04:45	MSF	75-69-4		
1,2,3-Trichloropropane	ND	ug/l	2000	06/03/06 04:45	MSF	96-18-4		
1,2,4-Trimethylbenzene	2100	ug/l	2000	06/03/06 04:45	MSF	95-63-6		
1,3,5-Trimethylbenzene	ND	ug/l	2000	06/03/06 04:45	MSF	108-67-8		
Vinyl chloride	ND	ug/l	2000	06/03/06 04:45	MSF	75-01-4		
Xylene (Total)	ND	ug/l	1.0	06/03/06 04:45	MSF	1330-20-7		
m&p-Xylene	ND	ug/l	4000	06/03/06 04:45	MSF			
o-Xylene	ND	ug/l	2000	06/03/06 04:45	MSF	95-47-6		
Toluene-d8 (S)	100	%		06/03/06 04:45	MSF	2037-26-5		
4-Bromofluorobenzene (S)	94	%		06/03/06 04:45	MSF	460-00-4		
Dibromofluoromethane (S)	113	%		06/03/06 04:45	MSF	1868-53-7		
1,2-Dichloroethane-d4 (S)	115	%		06/03/06 04:45	MSF	17060-07-0		

Date: 06/08/06

Pace Analytical
www.pacelabs.com

Pace Analytical Services, Inc.
9800 Kincey Avenue, Suite 100
Huntersville, NC 28078
Phone: 704.875.9092
Fax: 704.875.9091

Pace Analytical Services, Inc.
2225 Riverside Drive
Asheville, NC 28804
Phone: 828.254.7176
Fax: 828.252.4618

Lab Project Number: 92120131
Client Project ID: Wix/Affinia

Lab Sample No: 927028654 | Project Sample Number: 92120131-009 | Date Collected: 05/25/06 09:15
Client Sample ID: MW-1 | Matrix: Water | Date Received: 05/26/06 09:30

Parameters	Results	Units	Report Limit	Analyzed	By	CAS No.	Qual	RegLmt
GC/MS Volatiles								
GC/MS VOCs by 8260, low level	Method: EPA 8260							
Acetone	ND	ug/l	50000	06/05/06 00:05	MCK	67-64-1		
Benzene	ND	ug/l	2000	06/05/06 00:05	MCK	71-43-2		
Bromobenzene	ND	ug/l	2000	06/05/06 00:05	MCK	108-86-1		
Bromochloromethane	ND	ug/l	2000	06/05/06 00:05	MCK	74-97-5		
Bromodichloromethane	ND	ug/l	2000	06/05/06 00:05	MCK	75-27-4		
Bromoform	ND	ug/l	2000	06/05/06 00:05	MCK	75-25-2		
Bromomethane	ND	ug/l	2000	06/05/06 00:05	MCK	74-83-9		
2-Butanone (MEK)	ND	ug/l	10000	06/05/06 00:05	MCK	78-93-3		
n-Butylbenzene	ND	ug/l	2000	06/05/06 00:05	MCK	104-51-8		
sec-Butylbenzene	ND	ug/l	2000	06/05/06 00:05	MCK	135-98-8		
tert-Butylbenzene	ND	ug/l	2000	06/05/06 00:05	MCK	98-06-6		
Carbon tetrachloride	ND	ug/l	2000	06/05/06 00:05	MCK	56-23-5		
Chlorobenzene	ND	ug/l	2000	06/05/06 00:05	MCK	108-90-7		
Chloroethane	ND	ug/l	2000	06/05/06 00:05	MCK	75-00-3		
Chloroform	ND	ug/l	2000	06/05/06 00:05	MCK	67-66-3		
Chloromethane	ND	ug/l	2000	06/05/06 00:05	MCK	74-87-3		
2-Chlorotoluene	ND	ug/l	2000	06/05/06 00:05	MCK	95-49-8		
4-Chlorotoluene	ND	ug/l	2000	06/05/06 00:05	MCK	106-43-4		
1,2-Dibromo-3-chloropropane	ND	ug/l	2000	06/05/06 00:05	MCK	96-12-8		
Dibromochloromethane	ND	ug/l	2000	06/05/06 00:05	MCK	124-48-1		
1,2-Dibromoethane (EDB)	ND	ug/l	2000	06/05/06 00:05	MCK	106-93-4		
Dibromomethane	ND	ug/l	2000	06/05/06 00:05	MCK	74-95-3		
1,2-Dichlorobenzene	ND	ug/l	2000	06/05/06 00:05	MCK	95-50-1		
1,3-Dichlorobenzene	ND	ug/l	2000	06/05/06 00:05	MCK	541-73-1		
1,4-Dichlorobenzene	ND	ug/l	2000	06/05/06 00:05	MCK	106-46-7		
Dichlorodifluoromethane	ND	ug/l	2000	06/05/06 00:05	MCK	75-71-8		
1,1-Dichloroethane	ND	ug/l	2000	06/05/06 00:05	MCK	75-34-3		
1,2-Dichloroethane	ND	ug/l	2000	06/05/06 00:05	MCK	107-06-2		
1,2-Dichloroethene (Total)	ND	ug/l	1.0	06/05/06 00:05	MCK	540-59-0		
1,1-Dichloroethene	ND	ug/l	2000	06/05/06 00:05	MCK	75-35-4		
cis-1,2-Dichloroethene	ND	ug/l	2000	06/05/06 00:05	MCK	156-59-2		
trans-1,2-Dichloroethene	ND	ug/l	2000	06/05/06 00:05	MCK	156-60-5		
1,2-Dichloropropane	ND	ug/l	2000	06/05/06 00:05	MCK	78-87-5		
1,3-Dichloropropane	ND	ug/l	2000	06/05/06 00:05	MCK	142-28-9		
2,2-Dichloropropane	ND	ug/l	2000	06/05/06 00:05	MCK	594-20-7		
1,1-Dichloropropene	ND	ug/l	2000	06/05/06 00:05	MCK	563-58-6		
Diisopropyl ether	ND	ug/l	2000	06/05/06 00:05	MCK	108-20-3		

Pace Analytical
www.pacelabs.com

Pace Analytical Services, Inc.
9800 Kincey Avenue, Suite 100
Huntersville, NC 28078
Phone: 704.875.9092
Fax: 704.875.9091

Pace Analytical Services, Inc.
2225 Riverside Drive
Asheville, NC 28804
Phone: 828.254.7176
Fax: 828.252.4618

Lab Project Number: 92120131
Client Project ID: Wix/Affinia

Lab Sample No: 927028654 | Project Sample Number: 92120131-009 | Date Collected: 05/25/06 09:15
Client Sample ID: MW-1 | Matrix: Water | Date Received: 05/26/06 09:30

Parameters	Results	Units	Report Limit	Analyzed	By	CAS No.	Qual	RegLmt
Ethylbenzene	ND	ug/l	2000	06/05/06 00:05	MCK	100-41-4		
Hexachloro-1,3-butadiene	ND	ug/l	2000	06/05/06 00:05	MCK	87-68-3		
Isopropylbenzene (Cumene)	ND	ug/l	2000	06/05/06 00:05	MCK	98-82-8		
p-Isopropyltoluene	ND	ug/l	2000	06/05/06 00:05	MCK	99-87-6		
Methylene chloride	ND	ug/l	4000	06/05/06 00:05	MCK	75-09-2		
Methyl-tert-butyl ether	ND	ug/l	2000	06/05/06 00:05	MCK	1634-04-4		
Naphthalene	ND	ug/l	2000	06/05/06 00:05	MCK	91-20-3		
n-Propylbenzene	ND	ug/l	2000	06/05/06 00:05	MCK	103-65-1		
Styrene	ND	ug/l	2000	06/05/06 00:05	MCK	100-42-5		
1,1,1,2-Tetrachloroethane	ND	ug/l	2000	06/05/06 00:05	MCK	630-20-6		
1,1,2,2-Tetrachloroethane	ND	ug/l	2000	06/05/06 00:05	MCK	79-34-5		
Tetrachloroethene	ND	ug/l	2000	06/05/06 00:05	MCK	127-18-4		
Toluene	340000	ug/l	2000	06/05/06 00:05	MCK	108-88-3		
1,2,3-Trichlorobenzene	ND	ug/l	2000	06/05/06 00:05	MCK	87-61-6		
1,2,4-Trichlorobenzene	ND	ug/l	2000	06/05/06 00:05	MCK	120-82-1		
1,1,1-Trichloroethane	ND	ug/l	2000	06/05/06 00:05	MCK	71-55-6		
1,1,2-Trichloroethane	ND	ug/l	2000	06/05/06 00:05	MCK	79-00-5		
Trichloroethene	ND	ug/l	2000	06/05/06 00:05	MCK	79-01-6		
Trichlorofluoromethane	ND	ug/l	2000	06/05/06 00:05	MCK	75-69-4		
1,2,3-Trichloropropane	ND	ug/l	2000	06/05/06 00:05	MCK	96-18-4		
1,2,4-Trimethylbenzene	ND	ug/l	2000	06/05/06 00:05	MCK	95-63-6		
1,3,5-Trimethylbenzene	ND	ug/l	2000	06/05/06 00:05	MCK	108-67-8		
Vinyl chloride	ND	ug/l	2000	06/05/06 00:05	MCK	75-01-4		
Xylene (Total)	230	ug/l	1.0	06/05/06 00:05	MCK	1330-20-7		
m&p-Xylene	ND	ug/l	4000	06/05/06 00:05	MCK			
o-Xylene	ND	ug/l	2000	06/05/06 00:05	MCK	95-47-6		
Toluene-d8 (S)	102	%		06/05/06 00:05	MCK	2037-26-5		
4-Bromofluorobenzene (S)	94	%		06/05/06 00:05	MCK	460-00-4		
Dibromofluoromethane (S)	110	%		06/05/06 00:05	MCK	1868-53-7		
1,2-Dichloroethane-d4 (S)	113	%		06/05/06 00:05	MCK	17060-07-0		

Pace Analytical
www.pacelabs.com

Pace Analytical Services, Inc.
9800 Kincey Avenue, Suite 100
Huntersville, NC 28078
Phone: 704.875.9092
Fax: 704.875.9091

Pace Analytical Services, Inc.
2225 Riverside Drive
Asheville, NC 28804
Phone: 828.254.7176
Fax: 828.252.4618

Lab Project Number: 92120131
Client Project ID: Wix/Affinia

Lab Sample No: 927028662 | Project Sample Number: 92120131-010 | Date Collected: 05/25/06 08:45
Client Sample ID: FB-1 | Matrix: Water | Date Received: 05/26/06 09:30

GC/MS Volatiles

GC/MS VOCs by 8260, low level Method: EPA 8260

Parameters	Results	Units	Report Limit	Analyzed	By	CAS No.	Qual	RegLmt
Acetone	ND	ug/l	25.	06/03/06 08:54	MSF	67-64-1		
Benzene	ND	ug/l	1.0	06/03/06 08:54	MSF	71-43-2		
Bromobenzene	ND	ug/l	1.0	06/03/06 08:54	MSF	108-86-1		
Bromochloromethane	ND	ug/l	1.0	06/03/06 08:54	MSF	74-97-5		
Bromodichloromethane	ND	ug/l	1.0	06/03/06 08:54	MSF	75-27-4		
Bromoform	ND	ug/l	1.0	06/03/06 08:54	MSF	75-25-2		
Bromomethane	ND	ug/l	1.0	06/03/06 08:54	MSF	74-83-9		
2-Butanone (MEK)	ND	ug/l	5.0	06/03/06 08:54	MSF	78-93-3		
n-Butylbenzene	ND	ug/l	1.0	06/03/06 08:54	MSF	104-51-8		
sec-Butylbenzene	ND	ug/l	1.0	06/03/06 08:54	MSF	135-98-8		
tert-Butylbenzene	ND	ug/l	1.0	06/03/06 08:54	MSF	98-06-6		
Carbon tetrachloride	ND	ug/l	1.0	06/03/06 08:54	MSF	56-23-5		
Chlorobenzene	ND	ug/l	1.0	06/03/06 08:54	MSF	108-90-7		
Chloroethane	ND	ug/l	1.0	06/03/06 08:54	MSF	75-00-3		
Chloroform	ND	ug/l	1.0	06/03/06 08:54	MSF	67-66-3		
Chloromethane	ND	ug/l	1.0	06/03/06 08:54	MSF	74-87-3		
2-Chlorotoluene	ND	ug/l	1.0	06/03/06 08:54	MSF	95-49-8		
4-Chlorotoluene	ND	ug/l	1.0	06/03/06 08:54	MSF	106-43-4		
1,2-Dibromo-3-chloropropane	ND	ug/l	1.0	06/03/06 08:54	MSF	96-12-8		
Dibromochloromethane	ND	ug/l	1.0	06/03/06 08:54	MSF	124-48-1		
1,2-Dibromoethane (EDB)	ND	ug/l	1.0	06/03/06 08:54	MSF	106-93-4		
Dibromomethane	ND	ug/l	1.0	06/03/06 08:54	MSF	74-95-3		
1,2-Dichlorobenzene	ND	ug/l	1.0	06/03/06 08:54	MSF	95-50-1		
1,3-Dichlorobenzene	ND	ug/l	1.0	06/03/06 08:54	MSF	541-73-1		
1,4-Dichlorobenzene	ND	ug/l	1.0	06/03/06 08:54	MSF	106-46-7		
Dichlorodifluoromethane	ND	ug/l	1.0	06/03/06 08:54	MSF	75-71-8		
1,1-Dichloroethane	ND	ug/l	1.0	06/03/06 08:54	MSF	75-34-3		
1,2-Dichloroethane	ND	ug/l	1.0	06/03/06 08:54	MSF	107-06-2		
1,2-Dichloroethene (Total)	ND	ug/l	1.0	06/03/06 08:54	MSF	540-59-0		
1,1-Dichloroethene	ND	ug/l	1.0	06/03/06 08:54	MSF	75-35-4		
cis-1,2-Dichloroethene	ND	ug/l	1.0	06/03/06 08:54	MSF	156-59-2		
trans-1,2-Dichloroethene	ND	ug/l	1.0	06/03/06 08:54	MSF	156-60-5		
1,2-Dichloropropane	ND	ug/l	1.0	06/03/06 08:54	MSF	78-87-5		
1,3-Dichloropropane	ND	ug/l	1.0	06/03/06 08:54	MSF	142-28-9		
2,2-Dichloropropane	ND	ug/l	1.0	06/03/06 08:54	MSF	594-20-7		
1,1-Dichloropropene	ND	ug/l	1.0	06/03/06 08:54	MSF	563-58-6		
Diisopropyl ether	ND	ug/l	1.0	06/03/06 08:54	MSF	108-20-3		

Pace Analytical
www.pacelabs.com

Pace Analytical Services, Inc.
9800 Kincey Avenue, Suite 100
Huntersville, NC 28078
Phone: 704.875.9092
Fax: 704.875.9091

Pace Analytical Services, Inc.
2225 Riverside Drive
Asheville, NC 28804
Phone: 828.254.7176
Fax: 828.252.4618

Lab Project Number: 92120131
Client Project ID: Wix/Affinia

Lab Sample No: 927028662 | Project Sample Number: 92120131-010 | Date Collected: 05/25/06 08:45
Client Sample ID: FB-1 | Matrix: Water | Date Received: 05/26/06 09:30

Parameters	Results	Units	Report Limit	Analyzed	By	CAS No.	Qual	RegLmt
Ethylbenzene	ND	ug/l	1.0	06/03/06 08:54	MSF	100-41-4		
Hexachloro-1,3-butadiene	ND	ug/l	1.0	06/03/06 08:54	MSF	87-68-3		
Isopropylbenzene (Cumene)	ND	ug/l	1.0	06/03/06 08:54	MSF	98-82-8		
p-Isopropyltoluene	ND	ug/l	1.0	06/03/06 08:54	MSF	99-87-6		
Methylene chloride	ND	ug/l	2.0	06/03/06 08:54	MSF	75-09-2		
Methyl-tert-butyl ether	ND	ug/l	1.0	06/03/06 08:54	MSF	1634-04-4		
Naphthalene	ND	ug/l	1.0	06/03/06 08:54	MSF	91-20-3		
n-Propylbenzene	ND	ug/l	1.0	06/03/06 08:54	MSF	103-65-1		
Styrene	ND	ug/l	1.0	06/03/06 08:54	MSF	100-42-5		
1,1,1,2-Tetrachloroethane	ND	ug/l	1.0	06/03/06 08:54	MSF	630-20-6		
1,1,2,2-Tetrachloroethane	ND	ug/l	1.0	06/03/06 08:54	MSF	79-34-5		
Tetrachloroethene	ND	ug/l	1.0	06/03/06 08:54	MSF	127-18-4		
Toluene	ND	ug/l	1.0	06/03/06 08:54	MSF	108-88-3		
1,2,3-Trichlorobenzene	ND	ug/l	1.0	06/03/06 08:54	MSF	87-61-6		
1,2,4-Trichlorobenzene	ND	ug/l	1.0	06/03/06 08:54	MSF	120-82-1		
1,1,1-Trichloroethane	ND	ug/l	1.0	06/03/06 08:54	MSF	71-55-6		
1,1,2-Trichloroethane	ND	ug/l	1.0	06/03/06 08:54	MSF	79-00-5		
Trichloroethene	ND	ug/l	1.0	06/03/06 08:54	MSF	79-01-6		
Trichlorofluoromethane	ND	ug/l	1.0	06/03/06 08:54	MSF	75-69-4		
1,2,3-Trichloropropane	ND	ug/l	1.0	06/03/06 08:54	MSF	96-18-4		
1,2,4-Trimethylbenzene	ND	ug/l	1.0	06/03/06 08:54	MSF	95-63-6		
1,3,5-Trimethylbenzene	ND	ug/l	1.0	06/03/06 08:54	MSF	108-67-8		
Vinyl chloride	ND	ug/l	1.0	06/03/06 08:54	MSF	75-01-4		
Xylene (Total)	ND	ug/l	1.0	06/03/06 08:54	MSF	1330-20-7		
m&p-Xylene	ND	ug/l	2.0	06/03/06 08:54	MSF			
o-Xylene	ND	ug/l	1.0	06/03/06 08:54	MSF	95-47-6		
Toluene-d8 (S)	100	%		06/03/06 08:54	MSF	2037-26-5		
4-Bromofluorobenzene (S)	95	%		06/03/06 08:54	MSF	460-00-4		
Dibromofluoromethane (S)	114	%		06/03/06 08:54	MSF	1868-53-7		
1,2-Dichloroethane-d4 (S)	113	%		06/03/06 08:54	MSF	17060-07-0		

Pace Analytical
www.pacelabs.com

Pace Analytical Services, Inc.
9800 Kincey Avenue, Suite 100
Huntersville, NC 28078
Phone: 704.875.9092
Fax: 704.875.9091

Pace Analytical Services, Inc.
2225 Riverside Drive
Asheville, NC 28804
Phone: 828.254.7176
Fax: 828.252.4618

Lab Project Number: 92120131
Client Project ID: Wix/Affinia

Lab Sample No: 927028670 | Project Sample Number: 92120131-011 | Date Collected: 05/25/06 09:30
Client Sample ID: EB-1 | Matrix: Water | Date Received: 05/26/06 09:30

Parameters	Results	Units	Report Limit	Analyzed	By	CAS No.	Qual	RegLmt
GC/MS Volatiles								
GC/MS VOCs by 8260, low level	Method: EPA 8260							
Acetone	ND	ug/l	25.	06/03/06 09:19	MSF	67-64-1		
Benzene	ND	ug/l	1.0	06/03/06 09:19	MSF	71-43-2		
Bromobenzene	ND	ug/l	1.0	06/03/06 09:19	MSF	108-86-1		
Bromochloromethane	ND	ug/l	1.0	06/03/06 09:19	MSF	74-97-5		
Bromodichloromethane	ND	ug/l	1.0	06/03/06 09:19	MSF	75-27-4		
Bromoform	ND	ug/l	1.0	06/03/06 09:19	MSF	75-25-2		
Bromomethane	ND	ug/l	1.0	06/03/06 09:19	MSF	74-83-9		
2-Butanone (MEK)	ND	ug/l	5.0	06/03/06 09:19	MSF	78-93-3		
n-Butylbenzene	ND	ug/l	1.0	06/03/06 09:19	MSF	104-51-8		
sec-Butylbenzene	ND	ug/l	1.0	06/03/06 09:19	MSF	135-98-8		
tert-Butylbenzene	ND	ug/l	1.0	06/03/06 09:19	MSF	98-06-6		
Carbon tetrachloride	ND	ug/l	1.0	06/03/06 09:19	MSF	56-23-5		
Chlorobenzene	ND	ug/l	1.0	06/03/06 09:19	MSF	108-90-7		
Chloroethane	ND	ug/l	1.0	06/03/06 09:19	MSF	75-00-3		
Chloroform	ND	ug/l	1.0	06/03/06 09:19	MSF	67-66-3		
Chloromethane	ND	ug/l	1.0	06/03/06 09:19	MSF	74-87-3		
2-Chlorotoluene	ND	ug/l	1.0	06/03/06 09:19	MSF	95-49-8		
4-Chlorotoluene	ND	ug/l	1.0	06/03/06 09:19	MSF	106-43-4		
1,2-Dibromo-3-chloropropane	ND	ug/l	1.0	06/03/06 09:19	MSF	96-12-8		
Dibromochloromethane	ND	ug/l	1.0	06/03/06 09:19	MSF	124-48-1		
1,2-Dibromoethane (EDB)	ND	ug/l	1.0	06/03/06 09:19	MSF	106-93-4		
Dibromomethane	ND	ug/l	1.0	06/03/06 09:19	MSF	74-95-3		
1,2-Dichlorobenzene	ND	ug/l	1.0	06/03/06 09:19	MSF	95-50-1		
1,3-Dichlorobenzene	ND	ug/l	1.0	06/03/06 09:19	MSF	541-73-1		
1,4-Dichlorobenzene	ND	ug/l	1.0	06/03/06 09:19	MSF	106-46-7		
Dichlorodifluoromethane	ND	ug/l	1.0	06/03/06 09:19	MSF	75-71-8		
1,1-Dichloroethane	ND	ug/l	1.0	06/03/06 09:19	MSF	75-34-3		
1,2-Dichloroethane	ND	ug/l	1.0	06/03/06 09:19	MSF	107-06-2		
1,2-Dichloroethene (Total)	ND	ug/l	1.0	06/03/06 09:19	MSF	540-59-0		
1,1-Dichloroethene	ND	ug/l	1.0	06/03/06 09:19	MSF	75-35-4		
cis-1,2-Dichloroethene	ND	ug/l	1.0	06/03/06 09:19	MSF	156-59-2		
trans-1,2-Dichloroethene	ND	ug/l	1.0	06/03/06 09:19	MSF	156-60-5		
1,2-Dichloropropane	ND	ug/l	1.0	06/03/06 09:19	MSF	78-87-5		
1,3-Dichloropropane	ND	ug/l	1.0	06/03/06 09:19	MSF	142-28-9		
2,2-Dichloropropane	ND	ug/l	1.0	06/03/06 09:19	MSF	594-20-7		
1,1-Dichloropropene	ND	ug/l	1.0	06/03/06 09:19	MSF	563-58-6		
Diisopropyl ether	ND	ug/l	1.0	06/03/06 09:19	MSF	108-20-3		

Pace Analytical
www.pacelabs.com

Pace Analytical Services, Inc.
9800 Kincey Avenue, Suite 100
Huntersville, NC 28078
Phone: 704.875.9092
Fax: 704.875.9091

Pace Analytical Services, Inc.
2225 Riverside Drive
Asheville, NC 28804
Phone: 828.254.7176
Fax: 828.252.4618

Lab Project Number: 92120131
Client Project ID: Wix/Affinia

Lab Sample No: 927028670
Client Sample ID: EB-1

Project Sample Number: 92120131-011
Matrix: Water

Date Collected: 05/25/06 09:30
Date Received: 05/26/06 09:30

Parameters	Results	Units	Report Limit	Analyzed	By	CAS No.	Qual	RegLmt
Ethylbenzene	ND	ug/l	1.0	06/03/06 09:19	MSF	100-41-4		
Hexachloro-1,3-butadiene	ND	ug/l	1.0	06/03/06 09:19	MSF	87-68-3		
Isopropylbenzene (Cumene)	ND	ug/l	1.0	06/03/06 09:19	MSF	98-82-8		
p-Isopropyltoluene	ND	ug/l	1.0	06/03/06 09:19	MSF	99-87-6		
Methylene chloride	ND	ug/l	2.0	06/03/06 09:19	MSF	75-09-2		
Methyl-tert-butyl ether	ND	ug/l	1.0	06/03/06 09:19	MSF	1634-04-4		
Naphthalene	ND	ug/l	1.0	06/03/06 09:19	MSF	91-20-3		
n-Propylbenzene	ND	ug/l	1.0	06/03/06 09:19	MSF	103-65-1		
Styrene	ND	ug/l	1.0	06/03/06 09:19	MSF	100-42-5		
1,1,1,2-Tetrachloroethane	ND	ug/l	1.0	06/03/06 09:19	MSF	630-20-6		
1,1,2,2-Tetrachloroethane	ND	ug/l	1.0	06/03/06 09:19	MSF	79-34-5		
Tetrachloroethene	ND	ug/l	1.0	06/03/06 09:19	MSF	127-18-4		
Toluene	ND	ug/l	1.0	06/03/06 09:19	MSF	108-88-3		
1,2,3-Trichlorobenzene	ND	ug/l	1.0	06/03/06 09:19	MSF	87-61-6		
1,2,4-Trichlorobenzene	ND	ug/l	1.0	06/03/06 09:19	MSF	120-82-1		
1,1,1-Trichloroethane	ND	ug/l	1.0	06/03/06 09:19	MSF	71-55-6		
1,1,2-Trichloroethane	ND	ug/l	1.0	06/03/06 09:19	MSF	79-00-5		
Trichloroethene	ND	ug/l	1.0	06/03/06 09:19	MSF	79-01-6		
Trichlorofluoromethane	ND	ug/l	1.0	06/03/06 09:19	MSF	75-69-4		
1,2,3-Trichloropropane	ND	ug/l	1.0	06/03/06 09:19	MSF	96-18-4		
1,2,4-Trimethylbenzene	ND	ug/l	1.0	06/03/06 09:19	MSF	95-63-6		
1,3,5-Trimethylbenzene	ND	ug/l	1.0	06/03/06 09:19	MSF	108-67-8		
Vinyl chloride	ND	ug/l	1.0	06/03/06 09:19	MSF	75-01-4		
Xylene (Total)	ND	ug/l	1.0	06/03/06 09:19	MSF	1330-20-7		
m&p-Xylene	ND	ug/l	2.0	06/03/06 09:19	MSF			
o-Xylene	ND	ug/l	1.0	06/03/06 09:19	MSF	95-47-6		
Toluene-d8 (S)	100	%		06/03/06 09:19	MSF	2037-26-5		
4-Bromofluorobenzene (S)	94	%		06/03/06 09:19	MSF	460-00-4		
Dibromofluoromethane (S)	120	%		06/03/06 09:19	MSF	1868-53-7	3	
1,2-Dichloroethane-d4 (S)	113	%		06/03/06 09:19	MSF	17060-07-0		

Pace Analytical
www.pacelabs.com

Pace Analytical Services, Inc.
9800 Kincey Avenue, Suite 100
Huntersville, NC 28078
Phone: 704.875.9092
Fax: 704.875.9091

Pace Analytical Services, Inc.
2225 Riverside Drive
Asheville, NC 28804
Phone: 828.254.7176
Fax: 828.252.4618

Lab Project Number: 92120131
Client Project ID: Wix/Affinia

PARAMETER FOOTNOTES

Method 9071B modified to use ASE.

All pH, Free Chlorine, Total Chlorine and Ferrous Iron analyses conducted outside of EPA recommended immediate hold time.

Depending on the moisture content the PRLs can be elevated for all soil samples reported on a dry weight basis.

2-Chloroethyl vinyl ether has been shown to degrade in the presence of acid.

ND	Not detected at or above adjusted reporting limit
NC	Not Calculable
J	Estimated concentration above the adjusted method detection limit and below the adjusted reporting limit
MDL	Adjusted Method Detection Limit
(S)	Surrogate
[1]	High surrogate recovery was confirmed as a matrix effect by a second analysis.
[2]	Common laboratory contaminant.
[3]	The surrogate recovery was above the QC recovery limit. The sample was not re-extracted since no target analytes were detected in the sample.

Pace Analytical
www.pacelabs.com

Pace Analytical Services, Inc.
9800 Kincey Avenue, Suite 100
Huntersville, NC 28078
Phone: 704.875.9092
Fax: 704.875.9091

Pace Analytical Services, Inc.
2225 Riverside Drive
Asheville, NC 28804
Phone: 828.254.7176
Fax: 828.252.4618

QUALITY CONTROL DATA

Lab Project Number: 92120131
Client Project ID: Wix/Affinia

QC Batch: 158674 Analysis Method: EPA 8260
QC Batch Method: EPA 8260 Analysis Description: GC/MS VOCs by 8260, low level
Associated Lab Samples: 927028571 927028589 927028597 927028605 927028639 927028647

METHOD BLANK: 927043877
Associated Lab Samples: 927028571 927028589 927028597 927028605 927028639 927028647

Parameter	Units	Blank Result	Reporting Limit	Footnotes
Acetone	ug/l	ND	25.	
Benzene	ug/l	ND	1.0	
Bromobenzene	ug/l	ND	1.0	
Bromochloromethane	ug/l	ND	1.0	
Bromodichloromethane	ug/l	ND	1.0	
Bromoform	ug/l	ND	1.0	
Bromomethane	ug/l	ND	1.0	
2-Butanone (MEK)	ug/l	ND	5.0	
n-Butylbenzene	ug/l	ND	1.0	
sec-Butylbenzene	ug/l	ND	1.0	
tert-Butylbenzene	ug/l	ND	1.0	
Carbon tetrachloride	ug/l	ND	1.0	
Chlorobenzene	ug/l	ND	1.0	
Chloroethane	ug/l	ND	1.0	
Chloroform	ug/l	ND	1.0	
Chloromethane	ug/l	ND	1.0	
2-Chlorotoluene	ug/l	ND	1.0	
4-Chlorotoluene	ug/l	ND	1.0	
1,2-Dibromo-3-chloropropane	ug/l	ND	1.0	
Dibromochloromethane	ug/l	ND	1.0	
1,2-Dibromoethane (EDB)	ug/l	ND	1.0	
Dibromomethane	ug/l	ND	1.0	
1,2-Dichlorobenzene	ug/l	ND	1.0	
1,3-Dichlorobenzene	ug/l	ND	1.0	
1,4-Dichlorobenzene	ug/l	ND	1.0	
Dichlorodifluoromethane	ug/l	ND	1.0	
1,1-Dichloroethane	ug/l	ND	1.0	
1,2-Dichloroethane	ug/l	ND	1.0	
1,2-Dichloroethene (Total)	ug/l	ND	1.0	
1,1-Dichloroethene	ug/l	ND	1.0	

Pace Analytical
www.pacelabs.com

Pace Analytical Services, Inc.
9800 Kincey Avenue, Suite 100
Huntersville, NC 28078
Phone: 704.875.9092
Fax: 704.875.9091

Pace Analytical Services, Inc.
2225 Riverside Drive
Asheville, NC 28804
Phone: 828.254.7176
Fax: 828.252.4618

QUALITY CONTROL DATA

Lab Project Number: 92120131
Client Project ID: Wix/Affinia

METHOD BLANK: 927043877
Associated Lab Samples: 927028571 927028589 927028597 927028605 927028639 927028647

Parameter	Units	Blank Result	Reporting Limit	Footnotes
cis-1,2-Dichloroethene	ug/l	ND	1.0	
trans-1,2-Dichloroethene	ug/l	ND	1.0	
1,2-Dichloropropane	ug/l	ND	1.0	
1,3-Dichloropropane	ug/l	ND	1.0	
2,2-Dichloropropane	ug/l	ND	1.0	
1,1-Dichloropropene	ug/l	ND	1.0	
Diisopropyl ether	ug/l	ND	1.0	
Ethylbenzene	ug/l	ND	1.0	
Hexachloro-1,3-butadiene	ug/l	ND	1.0	
Isopropylbenzene (Cumene)	ug/l	ND	1.0	
p-Isopropyltoluene	ug/l	ND	1.0	
Methylene chloride	ug/l	ND	2.0	
Methyl-tert-butyl ether	ug/l	ND	1.0	
Naphthalene	ug/l	ND	1.0	
n-Propylbenzene	ug/l	ND	1.0	
Styrene	ug/l	ND	1.0	
1,1,1,2-Tetrachloroethane	ug/l	ND	1.0	
1,1,2,2-Tetrachloroethane	ug/l	ND	1.0	
Tetrachloroethene	ug/l	ND	1.0	
Toluene	ug/l	ND	1.0	
1,2,3-Trichlorobenzene	ug/l	ND	1.0	
1,2,4-Trichlorobenzene	ug/l	ND	1.0	
1,1,1-Trichloroethane	ug/l	ND	1.0	
1,1,2-Trichloroethane	ug/l	ND	1.0	
Trichloroethene	ug/l	ND	1.0	
Trichlorofluoromethane	ug/l	ND	1.0	
1,2,3-Trichloropropane	ug/l	ND	1.0	
1,2,4-Trimethylbenzene	ug/l	ND	1.0	
1,3,5-Trimethylbenzene	ug/l	ND	1.0	
Vinyl chloride	ug/l	ND	1.0	
Xylene (Total)	ug/l	ND	1.0	
m&p-Xylene	ug/l	ND	2.0	
o-Xylene	ug/l	ND	1.0	
Toluene-d8 (S)	%	99		
4-Bromofluorobenzene (S)	%	99		
Dibromofluoromethane (S)	%	99		

Pace Analytical
www.pacelabs.com

Pace Analytical Services, Inc.
9800 Kincey Avenue, Suite 100
Huntersville, NC 28078
Phone: 704.875.9092
Fax: 704.875.9091

Pace Analytical Services, Inc.
2225 Riverside Drive
Asheville, NC 28804
Phone: 828.254.7176
Fax: 828.252.4618

QUALITY CONTROL DATA

Lab Project Number: 92120131
Client Project ID: Wix/Affinia

METHOD BLANK: 927043877
Associated Lab Samples: 927028571 927028589 927028597 927028605 927028639 927028647

Parameter	Units	Blank Result	Reporting Limit	Footnotes
1,2-Dichloroethane-d4 (S)	%	97		

LABORATORY CONTROL SAMPLE: 927043885

Parameter	Units	Spike Conc.	LCS Result	LCS % Rec	Footnotes
Acetone	ug/l	100.00	97.79	98	
Benzene	ug/l	50.00	38.53	77	
Bromobenzene	ug/l	50.00	39.81	80	
Bromochloromethane	ug/l	50.00	38.62	77	
Bromodichloromethane	ug/l	50.00	39.96	80	
Bromoform	ug/l	50.00	43.25	86	
Bromomethane	ug/l	50.00	51.71	103	
2-Butanone (MEK)	ug/l	100.00	115.9	116	
n-Butylbenzene	ug/l	50.00	35.35	71	
sec-Butylbenzene	ug/l	50.00	34.78	70	
tert-Butylbenzene	ug/l	50.00	34.85	70	
Carbon tetrachloride	ug/l	50.00	36.67	73	
Chlorobenzene	ug/l	50.00	37.35	75	
Chloroethane	ug/l	50.00	41.77	84	
Chloroform	ug/l	50.00	39.76	80	
Chloromethane	ug/l	50.00	43.72	87	
2-Chlorotoluene	ug/l	50.00	36.39	73	
4-Chlorotoluene	ug/l	50.00	37.75	76	
1,2-Dibromo-3-chloropropane	ug/l	50.00	50.16	100	
Dibromochloromethane	ug/l	50.00	43.09	86	
1,2-Dibromoethane (EDB)	ug/l	50.00	44.26	88	
Dibromomethane	ug/l	50.00	41.89	84	
1,2-Dichlorobenzene	ug/l	50.00	38.55	77	
1,3-Dichlorobenzene	ug/l	50.00	37.77	76	
1,4-Dichlorobenzene	ug/l	50.00	38.94	78	
Dichlorodifluoromethane	ug/l	50.00	41.57	83	
1,1-Dichloroethane	ug/l	50.00	40.56	81	
1,2-Dichloroethane	ug/l	50.00	45.17	90	
1,2-Dichloroethene (Total)	ug/l	100.00	81.05	81	

Pace Analytical
www.pacelabs.com

Pace Analytical Services, Inc.
9800 Kincey Avenue, Suite 100
Huntersville, NC 28078
Phone: 704.875.9092
Fax: 704.875.9091

Pace Analytical Services, Inc.
2225 Riverside Drive
Asheville, NC 28804
Phone: 828.254.7176
Fax: 828.252.4618

QUALITY CONTROL DATA

Lab Project Number: 92120131
Client Project ID: Wix/Affinia

LABORATORY CONTROL SAMPLE: 927043885

Parameter	Units	Spike Conc.	LCS Result	LCS % Rec	Footnotes
1,1-Dichloroethene	ug/l	50.00	40.68	81	
cis-1,2-Dichloroethene	ug/l	50.00	40.47	81	
trans-1,2-Dichloroethene	ug/l	50.00	40.58	81	
1,2-Dichloropropane	ug/l	50.00	39.36	79	
1,3-Dichloropropane	ug/l	50.00	43.87	88	
2,2-Dichloropropane	ug/l	50.00	39.32	79	
1,1-Dichloropropene	ug/l	50.00	37.22	74	
Diisopropyl ether	ug/l	50.00	42.51	85	
Ethylbenzene	ug/l	50.00	35.80	72	
Hexachloro-1,3-butadiene	ug/l	50.00	35.96	72	
Isopropylbenzene (Cumene)	ug/l	50.00	35.12	70	
p-Isopropyltoluene	ug/l	50.00	35.91	72	
Methylene chloride	ug/l	50.00	41.97	84	
Methyl-tert-butyl ether	ug/l	50.00	48.31	97	
Naphthalene	ug/l	50.00	58.98	118	
n-Propylbenzene	ug/l	50.00	35.92	72	
Styrene	ug/l	50.00	39.10	78	
1,1,1,2-Tetrachloroethane	ug/l	50.00	38.35	77	
1,1,2,2-Tetrachloroethane	ug/l	50.00	51.11	102	
Tetrachloroethene	ug/l	50.00	34.30	69	
Toluene	ug/l	50.00	37.26	74	
1,2,3-Trichlorobenzene	ug/l	50.00	42.21	84	
1,2,4-Trichlorobenzene	ug/l	50.00	39.52	79	
1,1,1-Trichloroethane	ug/l	50.00	38.07	76	
1,1,2-Trichloroethane	ug/l	50.00	45.32	91	
Trichloroethene	ug/l	50.00	36.54	73	
Trichlorofluoromethane	ug/l	50.00	41.63	83	
1,2,3-Trichloropropane	ug/l	50.00	46.24	92	
1,2,4-Trimethylbenzene	ug/l	50.00	43.14	86	
1,3,5-Trimethylbenzene	ug/l	50.00	36.19	72	
Vinyl chloride	ug/l	50.00	42.84	86	
Xylene (Total)	ug/l	150.00	109.2	73	
m&p-Xylene	ug/l	100.00	72.75	73	
o-Xylene	ug/l	50.00	36.42	73	
Toluene-d8 (S)				99	
4-Bromofluorobenzene (S)				98	
Dibromofluoromethane (S)				107	

Pace Analytical
www.pacelabs.com

Pace Analytical Services, Inc.
9800 Kincey Avenue, Suite 100
Huntersville, NC 28078
Phone: 704.875.9092
Fax: 704.875.9091

Pace Analytical Services, Inc.
2225 Riverside Drive
Asheville, NC 28804
Phone: 828.254.7176
Fax: 828.252.4618

QUALITY CONTROL DATA

Lab Project Number: 92120131
Client Project ID: Wix/Affinia

LABORATORY CONTROL SAMPLE: 927043885

Parameter	Units	Spike Conc.	LCS Result	LCS % Rec	Footnotes
1,2-Dichloroethane-d4 (S)				119	

MATRIX SPIKE & MATRIX SPIKE DUPLICATE: 927046615 927046623

Parameter	Units	927033332 Result	Spike Conc.	MS Result	MSD Result	MS % Rec	MSD % Rec	RPD	Footnotes
Benzene	ug/l	0	50.00	48.74	50.65	98	101	4	
Chlorobenzene	ug/l	0	50.00	48.17	49.50	96	99	3	
1,1-Dichloroethene	ug/l	0	50.00	49.56	50.73	99	102	2	
Toluene	ug/l	0.1586	50.00	56.83	76.60	113	153	30	1
Trichloroethene	ug/l	0	50.00	46.22	47.93	92	96	4	
Toluene-d8 (S)						98	98		
4-Bromofluorobenzene (S)						100	98		
Dibromofluoromethane (S)						104	101		
1,2-Dichloroethane-d4 (S)						106	97		

Pace Analytical
www.pacelabs.com

Pace Analytical Services, Inc.
9800 Kincey Avenue, Suite 100
Huntersville, NC 28078
Phone: 704.875.9092
Fax: 704.875.9091

Pace Analytical Services, Inc.
2225 Riverside Drive
Asheville, NC 28804
Phone: 828.254.7176
Fax: 828.252.4618

QUALITY CONTROL DATA

Lab Project Number: 92120131
Client Project ID: Wix/Affinia

QC Batch: 158689 Analysis Method: EPA 8260
QC Batch Method: EPA 8260 Analysis Description: GC/MS VOCs by 8260, low level
Associated Lab Samples: 927028654 927028662 927028670

METHOD BLANK: 927044826
Associated Lab Samples: 927028654 927028662 927028670

Parameter	Units	Blank Result	Reporting Limit	Footnotes
Acetone	ug/l	ND	25.	
Benzene	ug/l	ND	1.0	
Bromobenzene	ug/l	ND	1.0	
Bromochloromethane	ug/l	ND	1.0	
Bromodichloromethane	ug/l	ND	1.0	
Bromoform	ug/l	ND	1.0	
Bromomethane	ug/l	ND	1.0	
2-Butanone (MEK)	ug/l	ND	5.0	
n-Butylbenzene	ug/l	ND	1.0	
sec-Butylbenzene	ug/l	ND	1.0	
tert-Butylbenzene	ug/l	ND	1.0	
Carbon tetrachloride	ug/l	ND	1.0	
Chlorobenzene	ug/l	ND	1.0	
Chloroethane	ug/l	ND	1.0	
Chloroform	ug/l	ND	1.0	
Chloromethane	ug/l	ND	1.0	
2-Chlorotoluene	ug/l	ND	1.0	
4-Chlorotoluene	ug/l	ND	1.0	
1,2-Dibromo-3-chloropropane	ug/l	ND	1.0	
Dibromochloromethane	ug/l	ND	1.0	
1,2-Dibromoethane (EDB)	ug/l	ND	1.0	
Dibromomethane	ug/l	ND	1.0	
1,2-Dichlorobenzene	ug/l	ND	1.0	
1,3-Dichlorobenzene	ug/l	ND	1.0	
1,4-Dichlorobenzene	ug/l	ND	1.0	
Dichlorodifluoromethane	ug/l	ND	1.0	
1,1-Dichloroethane	ug/l	ND	1.0	
1,2-Dichloroethane	ug/l	ND	1.0	
1,2-Dichloroethene (Total)	ug/l	ND	1.0	
1,1-Dichloroethene	ug/l	ND	1.0	
cis-1,2-Dichloroethene	ug/l	ND	1.0	

Pace Analytical
www.pacelabs.com

Pace Analytical Services, Inc.
9800 Kincey Avenue, Suite 100
Huntersville, NC 28078
Phone: 704.875.9092
Fax: 704.875.9091

Pace Analytical Services, Inc.
2225 Riverside Drive
Asheville, NC 28804
Phone: 828.254.7176
Fax: 828.252.4618

QUALITY CONTROL DATA

Lab Project Number: 92120131
Client Project ID: Wix/Affinia

METHOD BLANK: 927044826
Associated Lab Samples: 927028654 927028662 927028670

Parameter	Units	Blank Result	Reporting Limit	Footnotes
trans-1,2-Dichloroethene	ug/l	ND	1.0	
1,2-Dichloropropane	ug/l	ND	1.0	
1,3-Dichloropropane	ug/l	ND	1.0	
2,2-Dichloropropane	ug/l	ND	1.0	
1,1-Dichloropropene	ug/l	ND	1.0	
Diisopropyl ether	ug/l	ND	1.0	
Ethylbenzene	ug/l	ND	1.0	
Hexachloro-1,3-butadiene	ug/l	ND	1.0	
Isopropylbenzene (Cumene)	ug/l	ND	1.0	
p-Isopropyltoluene	ug/l	ND	1.0	
Methylene chloride	ug/l	ND	2.0	
Methyl-tert-butyl ether	ug/l	ND	1.0	
Naphthalene	ug/l	ND	1.0	
n-Propylbenzene	ug/l	ND	1.0	
Styrene	ug/l	ND	1.0	
1,1,1,2-Tetrachloroethane	ug/l	ND	1.0	
1,1,2,2-Tetrachloroethane	ug/l	ND	1.0	
Tetrachloroethene	ug/l	ND	1.0	
Toluene	ug/l	ND	1.0	
1,2,3-Trichlorobenzene	ug/l	ND	1.0	
1,2,4-Trichlorobenzene	ug/l	ND	1.0	
1,1,1-Trichloroethane	ug/l	ND	1.0	
1,1,2-Trichloroethane	ug/l	ND	1.0	
Trichloroethene	ug/l	ND	1.0	
Trichlorofluoromethane	ug/l	ND	1.0	
1,2,3-Trichloropropane	ug/l	ND	1.0	
1,2,4-Trimethylbenzene	ug/l	ND	1.0	
1,3,5-Trimethylbenzene	ug/l	ND	1.0	
Vinyl chloride	ug/l	ND	1.0	
Xylene (Total)	ug/l	ND	1.0	
m&p-Xylene	ug/l	ND	2.0	
o-Xylene	ug/l	ND	1.0	
Toluene-d8 (S)	%	100		
4-Bromofluorobenzene (S)	%	94		
Dibromofluoromethane (S)	%	111		
1,2-Dichloroethane-d4 (S)	%	116		

Date: 06/08/06

Pace Analytical
www.pacelabs.com

Pace Analytical Services, Inc.
9800 Kincey Avenue, Suite 100
Huntersville, NC 28078
Phone: 704.875.9092
Fax: 704.875.9091

Pace Analytical Services, Inc.
2225 Riverside Drive
Asheville, NC 28804
Phone: 828.254.7176
Fax: 828.252.4618

QUALITY CONTROL DATA

Lab Project Number: 92120131
Client Project ID: Wix/Affinia

LABORATORY CONTROL SAMPLE: 927044834

Parameter	Units	Spike Conc.	LCS Result	LCS % Rec	Footnotes
Acetone	ug/l	100.00	105.0	105	
Benzene	ug/l	50.00	59.95	120	
Bromobenzene	ug/l	50.00	60.50	121	
Bromochloromethane	ug/l	50.00	58.14	116	
Bromodichloromethane	ug/l	50.00	56.53	113	
Bromoform	ug/l	50.00	60.59	121	
Bromomethane	ug/l	50.00	68.68	137	
2-Butanone (MEK)	ug/l	100.00	113.3	113	
n-Butylbenzene	ug/l	50.00	52.52	105	
sec-Butylbenzene	ug/l	50.00	59.60	119	
tert-Butylbenzene	ug/l	50.00	55.31	111	
Carbon tetrachloride	ug/l	50.00	48.44	97	
Chlorobenzene	ug/l	50.00	57.32	115	
Chloroethane	ug/l	50.00	63.41	127	
Chloroform	ug/l	50.00	58.28	117	
Chloromethane	ug/l	50.00	60.63	121	
2-Chlorotoluene	ug/l	50.00	59.09	118	
4-Chlorotoluene	ug/l	50.00	59.86	120	
1,2-Dibromo-3-chloropropane	ug/l	50.00	55.65	111	
Dibromochloromethane	ug/l	50.00	58.04	116	
1,2-Dibromoethane (EDB)	ug/l	50.00	59.75	119	
Dibromomethane	ug/l	50.00	57.31	115	
1,2-Dichlorobenzene	ug/l	50.00	58.34	117	
1,3-Dichlorobenzene	ug/l	50.00	58.17	116	
1,4-Dichlorobenzene	ug/l	50.00	56.12	112	
Dichlorodifluoromethane	ug/l	50.00	68.32	137	
1,1-Dichloroethane	ug/l	50.00	57.15	114	
1,2-Dichloroethane	ug/l	50.00	56.63	113	
1,2-Dichloroethene (Total)	ug/l	100.00	122.2	122	
1,1-Dichloroethene	ug/l	50.00	62.96	126	
cis-1,2-Dichloroethene	ug/l	50.00	60.66	121	
trans-1,2-Dichloroethene	ug/l	50.00	61.50	123	
1,2-Dichloropropane	ug/l	50.00	56.56	113	
1,3-Dichloropropane	ug/l	50.00	56.17	112	
2,2-Dichloropropane	ug/l	50.00	46.08	92	
1,1-Dichloropropene	ug/l	50.00	60.29	121	
Diisopropyl ether	ug/l	50.00	56.84	114	

Pace Analytical
www.pacelabs.com

Pace Analytical Services, Inc.
9800 Kincey Avenue, Suite 100
Huntersville, NC 28078
Phone: 704.875.9092
Fax: 704.875.9091

Pace Analytical Services, Inc.
2225 Riverside Drive
Asheville, NC 28804
Phone: 828.254.7176
Fax: 828.252.4618

QUALITY CONTROL DATA

Lab Project Number: 92120131
Client Project ID: Wix/Affinia

LABORATORY CONTROL SAMPLE: 927044834

Parameter	Units	Spike Conc.	LCS Result	LCS % Rec	Footnotes
Ethylbenzene	ug/l	50.00	59.78	120	
Hexachloro-1,3-butadiene	ug/l	50.00	55.39	111	
Isopropylbenzene (Cumene)	ug/l	50.00	55.62	111	
p-Isopropyltoluene	ug/l	50.00	48.58	97	
Methylene chloride	ug/l	50.00	58.11	116	
Methyl-tert-butyl ether	ug/l	50.00	56.88	114	
Naphthalene	ug/l	50.00	49.24	98	
n-Propylbenzene	ug/l	50.00	59.60	119	
Styrene	ug/l	50.00	56.70	113	
1,1,1,2-Tetrachloroethane	ug/l	50.00	56.61	113	
1,1,2,2-Tetrachloroethane	ug/l	50.00	58.43	117	
Tetrachloroethene	ug/l	50.00	55.20	110	
Toluene	ug/l	50.00	58.55	117	
1,2,3-Trichlorobenzene	ug/l	50.00	60.50	121	
1,2,4-Trichlorobenzene	ug/l	50.00	58.60	117	
1,1,1-Trichloroethane	ug/l	50.00	57.50	115	
1,1,2-Trichloroethane	ug/l	50.00	56.55	113	
Trichloroethene	ug/l	50.00	57.98	116	
Trichlorofluoromethane	ug/l	50.00	63.24	126	
1,2,3-Trichloropropane	ug/l	50.00	54.57	109	
1,2,4-Trimethylbenzene	ug/l	50.00	50.51	101	
1,3,5-Trimethylbenzene	ug/l	50.00	55.43	111	
Vinyl chloride	ug/l	50.00	68.91	138	2
Xylene (Total)	ug/l	150.00	181.2	121	
m&p-Xylene	ug/l	100.00	119.9	120	
o-Xylene	ug/l	50.00	61.28	123	
Toluene-d8 (S)				100	
4-Bromofluorobenzene (S)				98	
Dibromofluoromethane (S)				102	
1,2-Dichloroethane-d4 (S)				104	

Date: 06/08/06

Pace Analytical
www.pacelabs.com

Pace Analytical Services, Inc.
9800 Kincey Avenue, Suite 100
Huntersville, NC 28078
Phone: 704.875.9092
Fax: 704.875.9091

Pace Analytical Services, Inc.
2225 Riverside Drive
Asheville, NC 28804
Phone: 828.254.7176
Fax: 828.252.4618

QUALITY CONTROL DATA

Lab Project Number: 92120131
Client Project ID: Wix/Affinia

QC Batch: 158928 Analysis Method: EPA 8260
QC Batch Method: EPA 8260 Analysis Description: GC/MS VOCs 5035/8260 low level
Associated Lab Samples: 927028613 927028621

METHOD BLANK: 927055764
Associated Lab Samples: 927028613 927028621

Parameter	Units	Blank Result	Reporting Limit	Footnotes
Acetone	ug/kg	ND	100	
Benzene	ug/kg	ND	5.0	
Bromobenzene	ug/kg	ND	5.0	
Bromochloromethane	ug/kg	ND	5.0	
Bromodichloromethane	ug/kg	ND	5.0	
Bromoform	ug/kg	ND	5.0	
Bromomethane	ug/kg	ND	10.	
2-Butanone (MEK)	ug/kg	ND	100	
n-Butylbenzene	ug/kg	ND	5.0	
sec-Butylbenzene	ug/kg	ND	5.0	
tert-Butylbenzene	ug/kg	ND	5.0	
Carbon tetrachloride	ug/kg	ND	5.0	
Chlorobenzene	ug/kg	ND	5.0	
Chloroethane	ug/kg	ND	10.	
Chloroform	ug/kg	ND	5.0	
Chloromethane	ug/kg	ND	10.	
2-Chlorotoluene	ug/kg	ND	5.0	
4-Chlorotoluene	ug/kg	ND	5.0	
1,2-Dibromo-3-chloropropane	ug/kg	ND	5.0	
Dibromochloromethane	ug/kg	ND	5.0	
1,2-Dibromoethane (EDB)	ug/kg	ND	5.0	
Dibromomethane	ug/kg	ND	5.0	
1,2-Dichlorobenzene	ug/kg	ND	5.0	
1,3-Dichlorobenzene	ug/kg	ND	5.0	
1,4-Dichlorobenzene	ug/kg	ND	5.0	
Dichlorodifluoromethane	ug/kg	ND	10.	
1,1-Dichloroethane	ug/kg	ND	5.0	
1,2-Dichloroethane	ug/kg	ND	5.0	
1,1-Dichloroethene	ug/kg	ND	5.0	
cis-1,2-Dichloroethene	ug/kg	ND	5.0	
trans-1,2-Dichloroethene	ug/kg	ND	5.0	

Pace Analytical
www.pacelabs.com

Pace Analytical Services, Inc.
9800 Kincey Avenue, Suite 100
Huntersville, NC 28078
Phone: 704.875.9092
Fax: 704.875.9091

Pace Analytical Services, Inc.
2225 Riverside Drive
Asheville, NC 28804
Phone: 828.254.7176
Fax: 828.252.4618

QUALITY CONTROL DATA

Lab Project Number: 92120131
Client Project ID: Wix/Affinia

METHOD BLANK: 927055764
Associated Lab Samples: 927028613 927028621

Parameter	Units	Blank Result	Reporting Limit	Footnotes
1,2-Dichloropropane	ug/kg	ND	5.0	
1,3-Dichloropropane	ug/kg	ND	5.0	
2,2-Dichloropropane	ug/kg	ND	5.0	
1,1-Dichloropropene	ug/kg	ND	5.0	
cis-1,3-Dichloropropene	ug/kg	ND	5.0	
trans-1,3-Dichloropropene	ug/kg	ND	5.0	
Diisopropyl ether	ug/kg	ND	5.0	
Ethylbenzene	ug/kg	ND	5.0	
Hexachloro-1,3-butadiene	ug/kg	ND	5.0	
2-Hexanone	ug/kg	ND	50.	
Isopropylbenzene (Cumene)	ug/kg	ND	5.0	
p-Isopropyltoluene	ug/kg	ND	5.0	
Methylene chloride	ug/kg	ND	5.0	
4-Methyl-2-pentanone (MIBK)	ug/kg	ND	50.	
Methyl-tert-butyl ether	ug/kg	ND	5.0	
Naphthalene	ug/kg	ND	5.0	
n-Propylbenzene	ug/kg	ND	5.0	
Styrene	ug/kg	ND	5.0	
1,1,1,2-Tetrachloroethane	ug/kg	ND	5.0	
1,1,2,2-Tetrachloroethane	ug/kg	ND	5.0	
Tetrachloroethene	ug/kg	ND	5.0	
Toluene	ug/kg	ND	5.0	
1,2,3-Trichlorobenzene	ug/kg	ND	5.0	
1,2,4-Trichlorobenzene	ug/kg	ND	5.0	
1,1,1-Trichloroethane	ug/kg	ND	5.0	
1,1,2-Trichloroethane	ug/kg	ND	5.0	
Trichloroethene	ug/kg	ND	5.0	
Trichlorofluoromethane	ug/kg	ND	5.0	
1,2,3-Trichloropropane	ug/kg	ND	5.0	
1,2,4-Trimethylbenzene	ug/kg	ND	5.0	
1,3,5-Trimethylbenzene	ug/kg	ND	5.0	
Vinyl acetate	ug/kg	ND	50.	
Vinyl chloride	ug/kg	ND	10.	
Xylene (Total)	ug/kg	ND	5.0	
m&p-Xylene	ug/kg	ND	10.	
o-Xylene	ug/kg	ND	5.0	

Pace Analytical
www.pacelabs.com

Pace Analytical Services, Inc.
9800 Kincey Avenue, Suite 100
Huntersville, NC 28078
Phone: 704.875.9092
Fax: 704.875.9091

Pace Analytical Services, Inc.
2225 Riverside Drive
Asheville, NC 28804
Phone: 828.254.7176
Fax: 828.252.4618

QUALITY CONTROL DATA

Lab Project Number: 92120131
Client Project ID: Wix/Affinia

METHOD BLANK: 927055764
Associated Lab Samples: 927028613 927028621

Parameter	Units	Blank Result	Reporting Limit	Footnotes
Toluene-d8 (S)	%	101		
4-Bromofluorobenzene (S)	%	99		
Dibromofluoromethane (S)	%	96		
1,2-Dichloroethane-d4 (S)	%	100		

LABORATORY CONTROL SAMPLE: 927055772

Parameter	Units	Spike Conc.	LCS Result	LCS % Rec	Footnotes
Acetone	ug/kg	100.00	95.84	96	
Benzene	ug/kg	50.00	57.43	115	
Bromobenzene	ug/kg	50.00	54.76	110	
Bromochloromethane	ug/kg	50.00	49.72	99	
Bromodichloromethane	ug/kg	50.00	49.45	99	
Bromoform	ug/kg	50.00	50.31	101	
Bromomethane	ug/kg	50.00	63.29	127	
2-Butanone (MEK)	ug/kg	100.00	99.22	99	
n-Butylbenzene	ug/kg	50.00	49.49	99	
sec-Butylbenzene	ug/kg	50.00	59.32	119	
tert-Butylbenzene	ug/kg	50.00	52.32	105	
Carbon tetrachloride	ug/kg	50.00	59.15	118	
Chlorobenzene	ug/kg	50.00	51.36	103	
Chloroethane	ug/kg	50.00	49.52	99	
Chloroform	ug/kg	50.00	54.15	108	
Chloromethane	ug/kg	50.00	43.80	88	
2-Chlorotoluene	ug/kg	50.00	57.58	115	
4-Chlorotoluene	ug/kg	50.00	53.64	107	
1,2-Dibromo-3-chloropropane	ug/kg	50.00	59.74	119	
Dibromochloromethane	ug/kg	50.00	49.99	100	
1,2-Dibromoethane (EDB)	ug/kg	50.00	54.48	109	
Dibromomethane	ug/kg	50.00	50.82	102	
1,2-Dichlorobenzene	ug/kg	50.00	58.26	117	
1,3-Dichlorobenzene	ug/kg	50.00	51.81	104	
1,4-Dichlorobenzene	ug/kg	50.00	57.50	115	
Dichlorodifluoromethane	ug/kg	50.00	38.54	77	

Pace Analytical
www.pacelabs.com

Pace Analytical Services, Inc.
9800 Kincey Avenue, Suite 100
Huntersville, NC 28078
Phone: 704.875.9092
Fax: 704.875.9091

Pace Analytical Services, Inc.
2225 Riverside Drive
Asheville, NC 28804
Phone: 828.254.7176
Fax: 828.252.4618

QUALITY CONTROL DATA

Lab Project Number: 92120131
Client Project ID: Wix/Affinia

LABORATORY CONTROL SAMPLE: 927055772

Parameter	Units	Spike Conc.	LCS Result	LCS % Rec	Footnotes
1,1-Dichloroethane	ug/kg	50.00	51.97	104	
1,2-Dichloroethane	ug/kg	50.00	50.35	101	
1,1-Dichloroethene	ug/kg	50.00	53.54	107	
cis-1,2-Dichloroethene	ug/kg	50.00	52.00	104	
trans-1,2-Dichloroethene	ug/kg	50.00	50.83	102	
1,2-Dichloropropane	ug/kg	50.00	49.85	100	
1,3-Dichloropropane	ug/kg	50.00	50.33	101	
2,2-Dichloropropane	ug/kg	50.00	50.53	101	
1,1-Dichloropropene	ug/kg	50.00	49.07	98	
cis-1,3-Dichloropropene	ug/kg	50.00	47.21	94	
trans-1,3-Dichloropropene	ug/kg	50.00	50.42	101	
Diisopropyl ether	ug/kg	50.00	53.10	106	
Ethylbenzene	ug/kg	50.00	57.77	116	
Hexachloro-1,3-butadiene	ug/kg	50.00	55.33	111	
2-Hexanone	ug/kg	100.00	117.3	117	
Isopropylbenzene (Cumene)	ug/kg	50.00	50.72	101	
p-Isopropyltoluene	ug/kg	50.00	48.40	97	
Methylene chloride	ug/kg	50.00	49.55	99	
4-Methyl-2-pentanone (MIBK)	ug/kg	100.00	118.4	118	
Methyl-tert-butyl ether	ug/kg	50.00	50.18	100	
Naphthalene	ug/kg	50.00	54.27	109	
n-Propylbenzene	ug/kg	50.00	53.25	107	
Styrene	ug/kg	50.00	51.50	103	
1,1,1,2-Tetrachloroethane	ug/kg	50.00	50.85	102	
1,1,2,2-Tetrachloroethane	ug/kg	50.00	51.14	102	
Tetrachloroethene	ug/kg	50.00	55.44	111	
Toluene	ug/kg	50.00	55.79	112	
1,2,3-Trichlorobenzene	ug/kg	50.00	57.83	116	
1,2,4-Trichlorobenzene	ug/kg	50.00	57.52	115	
1,1,1-Trichloroethane	ug/kg	50.00	53.05	106	
1,1,2-Trichloroethane	ug/kg	50.00	58.08	116	
Trichloroethene	ug/kg	50.00	48.33	97	
Trichlorofluoromethane	ug/kg	50.00	48.05	96	
1,2,3-Trichloropropane	ug/kg	50.00	55.00	110	
1,2,4-Trimethylbenzene	ug/kg	50.00	48.76	98	
1,3,5-Trimethylbenzene	ug/kg	50.00	49.07	98	
Vinyl acetate	ug/kg	100.00	115.7	116	

Pace Analytical
www.pacelabs.com

Pace Analytical Services, Inc.
9800 Kincey Avenue, Suite 100
Huntersville, NC 28078
Phone: 704.875.9092
Fax: 704.875.9091

Pace Analytical Services, Inc.
2225 Riverside Drive
Asheville, NC 28804
Phone: 828.254.7176
Fax: 828.252.4618

QUALITY CONTROL DATA

Lab Project Number: 92120131
Client Project ID: Wix/Affinia

LABORATORY CONTROL SAMPLE: 927055772

Parameter	Units	Spike Conc.	LCS Result	LCS % Rec	Footnotes
Vinyl chloride	ug/kg	50.00	48.45	97	
Xylene (Total)	ug/kg	150.00	157.4	105	
m&p-Xylene	ug/kg	100.00	104.8	105	
o-Xylene	ug/kg	50.00	52.63	105	
Toluene-d8 (S)				99	
4-Bromofluorobenzene (S)				98	
Dibromofluoromethane (S)				98	
1,2-Dichloroethane-d4 (S)				99	

Pace Analytical
www.pacelabs.com

Pace Analytical Services, Inc.
9800 Kincey Avenue, Suite 100
Huntersville, NC 28078
Phone: 704.875.9092
Fax: 704.875.9091

Pace Analytical Services, Inc.
2225 Riverside Drive
Asheville, NC 28804
Phone: 828.254.7176
Fax: 828.252.4618

QUALITY CONTROL DATA

Lab Project Number: 92120131
Client Project ID: Wix/Affinia

QC Batch: 158302 — Analysis Method: % Moisture
QC Batch Method: — Analysis Description: Percent Moisture
Associated Lab Samples: 927028613 927028621

SAMPLE DUPLICATE: 927028951

Parameter	Units	927025569 Result	DUP Result	RPD	Footnotes
Percent Moisture	%	19.30	17.70	9	

Pace Analytical
www.pacelabs.com

Pace Analytical Services, Inc.
9800 Kincey Avenue, Suite 100
Huntersville, NC 28078
Phone: 704.875.9092
Fax: 704.875.9091

Pace Analytical Services, Inc.
2225 Riverside Drive
Asheville, NC 28804
Phone: 828.254.7176
Fax: 828.252.4618

Lab Project Number: 92120131
Client Project ID: Wix/Affinia

QUALITY CONTROL DATA PARAMETER FOOTNOTES

Consistent with EPA guidelines, unrounded concentrations are displayed and have been used to calculate % Rec and RPD values.

LCS(D)	Laboratory Control Sample (Duplicate)
MS(D)	Matrix Spike (Duplicate)
DUP	Sample Duplicate
ND	Not detected at or above adjusted reporting limit
NC	Not Calculable
J	Estimated concentration above the adjusted method detection limit and below the adjusted reporting limit
MDL	Adjusted Method Detection Limit
RPD	Relative Percent Difference
(S)	Surrogate
[1]	The spike recovery was outside acceptance limits for the MS and /or MSD due to matrix interference. The LCS and/or LCSD were within acceptance limits showing that the laboratory is in control and the data is acceptable.
[2]	Recovery falls outside of QC limits, however, this compound is not found in the associated samples.

Pace Analytical®

CHAIN-OF-CUSTODY / Analytical Request Document

The Chain-of-Custody is a LEGAL DOCUMENT. All relevant fields must be completed accurately.

Page: of 0977098

Section A
Required Client Information:

Company	
Address	
Email To:	
Phone	Fax
Requested Due Date/TAT:	

Section B
Required Project Information:

Report To:	
Copy To:	
Purchase Order No.:	
Project Name:	
Project Number:	

Section C
Invoice Information:

Attention:	
Company Name:	
Address:	
Pace Quote Reference:	
Pace Project Manager:	
Pace Profile #:	

REGULATORY AGENCY

☐ NPDES ☐ GROUND WATER ☐ DRINKING WATER
☐ UST ☐ RCRA ☐ Other_____

SITE LOCATION ☐GA ☐IL ☐IN ☐MI ☐MN ☐NC ☐OH ☐SC ☐WI ☐OTHER _____

Section D
Required Client Information

SAMPLE ID

One Character per box.
(A-Z, 0-9 / -)
Samples IDs MUST BE UNIQUE

Valid Matrix Codes

MATRIX	CODE
DRINKING WATER	DW
WATER	WT
WASTE WATER	WW
PRODUCT	P
SOIL/SOLID	SL
OIL	OL
WIPE	WP
AIR	AR
OTHER	OT
TISSUE	TS

ITEM #	SAMPLE ID	MATRIX CODE	SAMPLE TYPE G=GRAB C=COMP	COMPOSITE START DATE	COMPOSITE START TIME	COMPOSITE END/GRAB DATE	COMPOSITE END/GRAB TIME	SAMPLE TEMP AT COLLECTION	# OF CONTAINERS	Unpreserved	H_2SO_4	HNO_3	HCl	NaOH	$Na_2S_2O_3$	Methanol	Other	Residual Chlorine (Y/N)	Pace Project Number / Lab I.D
1	[illegible]	WT	G	5/20/11	1255				3				X					Y	
2	[illegible]	WT	C	5/20	1540				3				X					Y	
3	[illegible]	WT	C	5/20	1445				3				X					Y	
4	[illegible]	WT	C	5/20	1725				3				X					Y	
5	[illegible]	SL	C	5/20	1725				4	X	X					X		X	
6	[illegible]	WT	C	5/20	1540				3				X					Y	
7	[illegible]	SL	C	5/20	1535				4	X	X					X		X	
8	[illegible]	WT	C	5/20	1030				[illegible]									Y	
9	[illegible]	WT	C	5/20	[illegible]				[illegible]				X					X	
10	[illegible]	WT	C	5/20	0945				[illegible]				X					X	
11	[illegible]	WT	C	5/20	0830				[illegible]				X					X	
12																			

Filtered (Y/N): [illegible]
Requested Analysis: [illegible]

RELINQUISHED BY / AFFILIATION	DATE	TIME	ACCEPTED BY / AFFILIATION	DATE	TIME
[illegible]	5/20/11				

SAMPLE CONDITION

Temp in °C	Received on Ice	Custody Sealed Cooler	Samples Intact
	Y/N	Y/N	Y/N
	Y/N	Y/N	Y/N
	Y/N	Y/N	Y/N
	Y/N	Y/N	Y/N

Additional Comments:

Accurate Representation of Original Document

Poor Quality Original

SAMPLER NAME AND SIGNATURE

PRINT Name of SAMPLER: [illegible]

SIGNATURE of SAMPLER: [illegible]

DATE Signed (MM / DD / YY)

SEE REVERSE SIDE FOR INSTRUCTIONS

4.

Tables

Table 1: Summary of Well Construction Data
Wix Filtration Corporation - Dillon, South Carolina
The Affinia Group, Inc.

Well Number	Date Installed	Well Type	Hydrogeologic Unit Screened	Total Boring Depth (ft. BGS)	Depth to Top of Bentonite Seal (ft. BGS)	Depth to Top of Sand Pack (ft. BGS)	Ground Elevation (ft., NGVD)	Top of PVC Casing Elevation (ft., NGVD)	Bottom of Borehole Elevation (ft., NGVD)	Elevation of Screened Interval (ft., NGVD)	Northing	Easting
MW-1	5/17/2006	Schedule 40 PVC Type II	Surficial Aquifer	17.27	2.5	5.0	131.82	131.56	114.55	124.65 - 115.23	954878.914	2486306.004
MW-2	5/17/2006	Schedule 40 PVC Type II	Surficial Aquifer	17.51	3.0	5.0	129.86	129.58	112.35	122.48 - 113.03	954869.393	2486275.086
MW-3	5/17/2006	Schedule 40 PVC Type II	Surficial Aquifer	16.56	1.5	4.5	129.18	129.06	112.62	122.60 - 113.12	954787.421	2486292.585
MW-4	5/17/2006	Schedule 40 PVC Type II	Surficial Aquifer	16.93	2.5	5.0	130.66	130.47	113.73	123.66 - 114.23	954815.481	2486315.328

Note
NGVD = National Geodetic Vertical Datum of 1929
BGS = Below Ground Surface

Table 2: Summary of Soil and Sediment Sample Results Compared to Standards
Wix Filtration Corporation - Dillon, South Carolina
The Affinia Group, Inc.

Compounds and Constituents	PQL	MDL	PRG	Soil Sample Results May 16, 2006							
				STB-1 (4-6)		STB-2 (6-8)		STB-3 (8-10)		STB-4 (4-6)	
				Result	Report Limit	Result	Report Limit	Result	Report Limit	Result	Report Limit
	(µg/kg)			(µg/kg)		(µg/kg)		(µg/kg)		(µg/kg)	
Acetone	20	1.6	14,000,000	ND	22,000	ND	42,000	ND	77	ND	4,500
Benzene	330	45	640	ND	1,100	ND	2,100	ND	3.8	ND	220
cis-1,2-Dichloroethene	5	0.065	43,000	ND	1,100	ND	2,100	ND	3.8	ND	220
Ethylbenzene	330	40	400,000	ND	1,100	ND	2,100	9.9	3.8	290	220
Isopropylbenzene	5	0.30	570,000	ND	1,100	ND	2,100	ND	3.8	ND	220
p-Isopropyltoluene	NM	NM	NL	ND	1,100	ND	2,100	ND	3.8	**410**	220
n-Propylbenzene	NM	NM	240,000	ND	1,100	ND	2,100	ND	3.8	ND	220
Naphthalene	1,600	180	NL	1,100	1,100	ND	2,100	ND	3.8	ND	220
Toluene	5,000	670	520,000	410,000	22,000	**1,800,000**	21,000	30,000	960	66,000	2,200
1,2,4-Trimethylbenzene	NM	NM	52	**4,000**	1,100	**4,100**	2,100	8.2	3.8	ND	220
1,3,5-Trimethylbenzene	NM	NM	21	**1,300**	1,100	ND	2,100	ND	3.8	ND	220
Xylene (Total)	10,000	2,900	270,000	2,100	4.4	ND	4.2	14	3.8	450	4.5
m&p-Xylene	NM	NM	NL	ND	2,200	ND	4,200	**12**	7.7	**450**	450
o-Xylene	NM	NM	NL	ND	1,100	ND	2,100	ND	3.8	ND	220
Total VOCs	--	--	--	418,500	--	1,804,100	--	30,044.1	--	67,600	--
Total Organic Carbon	NM	NM	NL	NA	NA	NA	NA	NA	NA	NA	NA

Notes:

= Results above PRG comparative standard
PQL = Practical Quantitation Limit - SW 846 EPA Method 8260B
MDL = Laboratory Report Method Detection Limit Quality Assurance Objectives
PRG = Residential Preliminary Remediation Goal - EPA Region IX from October 2004 or EPA Region IV
µg/kg = Micrograms per Kilogram
ND = Not Detected above applicable reporting limit
NA = Not Analyzed
NL = Not Listed in EPA Region IX PRG table from October 2004
NM = Not Listed with the Safe Drinking Water Act and SW 846 EPA Method 8260B
STB-DUP = Blind Duplicate sample for STB-8 (6-8)

Table 2: Summary of Soil and Sediment Sample Results Compared to Standards
Wix Filtration Corporation - Dillon, South Carolina
The Affinia Group, Inc.

Compounds and Constituents	PQL	MDL	PRG	Soil Sample Results May 17, 2006							
				STB-5 (4-6)		STB-6 (6-8)		STB-7 (2-4)		STB-8 (6-8)	
				Result	Report Limit	Result	Report Limit	Result	Report Limit	Result	Report Limit
	(µg/kg)			(µg/kg)		(µg/kg)		(µg/kg)		(µg/kg)	
Acetone	20	1.6	14,000,000	220	87	ND	80	ND	87	ND	85,000
Benzene	330	45	640	15	4.4	6.9	4	ND	4.4	ND	4,300
cis-1,2-Dichloroethene	5	0.065	43,000	ND	4.4	ND	4	ND	4.4	ND	4,300
Ethylbenzene	330	40	400,000	38	4.4	18	4	8.5	4.4	ND	4,300
Isopropylbenzene	5	0.30	570,000	5	4.4	ND	4	9.4	4.4	ND	4,300
p-Isopropyltoluene	NM	NM	NL	**140**	4.4	**11**	4	**5.4**	4.4	ND	4,300
n-Propylbenzene	NM	NM	240,000	55	4.4	ND	4	22	4.4	ND	4,300
Naphthalene	1,600	180	NL	84	4.4	ND	4	ND	4.4	ND	4,300
Toluene	5,000	670	520,000	370,000	11,000	25,000	2,000	140	4.4	**2,000,000**	21,000
1,2,4-Trimethylbenzene	NM	NM	52	**130**	4.4	ND	4	ND	4.4	ND	4,300
1,3,5-Trimethylbenzene	NM	NM	21	**42**	4.4	ND	4	**28**	4.4	ND	4,300
Xylene (Total)	10,000	2,900	270,000	84	4.4	17	4	11	4.4	6,000	4.3
m&p-Xylene	NM	NM	NL	**55**	8.7	**14**	8	**9.4**	8.8	ND	8,500
o-Xylene	NM	NM	NL	**28**	4.4	ND	4	ND	4.4	**4,700**	4,300
Total VOCs	--	--	--	370,896	--	25,066.9	--	233.7	--	2,010,700	--
Total Organic Carbon	NL	NL	NL	NA	NA	NA	NA	NA	NA	NA	NA

Notes:

= Results above PRG comparative standard
PQL = Practical Quantitation Limit - SW 846 EPA Method 8260B
MDL = Laboratory Report Method Detection Limit Quality Assurance Objectives
PRG = Residential Preliminary Remediation Goal - EPA Region IX from October 2004 or EPA Region IV
µg/kg = Micrograms per Kilogram
ND = Not Detected above applicable reporting limit
NA = Not Analyzed
NL = Not Listed in EPA Region IX PRG table from October 2004
NM = Not Listed with the Safe Drinking Water Act and SW 846 EPA Method 8260B
STB-DUP = Blind Duplicate sample for STB-8 (6-8)

Table 2: Summary of Soil and Sediment Sample Results Compared to Standards
Wix Filtration Corporation - Dillon, South Carolina
The Affinia Group, Inc.

Compounds and Constituents	PQL	MDL	PRG	Soil Sample Results									
				May 17, 2006						May 18, 2006			
				STB-9 (8-10)		STB-DUP		MW-3 (8-10)*		STB-10 (8-10)		STB-10 (12-14)	
				Result	Report Limit	Result	Report Limit	Result	Report Limit	Result	Report Limit	Result	Report Limit
	(µg/kg)			(µg/kg)		(µg/kg)		(µg/kg)		(µg/kg)		(µg/kg)	
Acetone	20	1.6	14,000,000	ND	86	ND	84,000	NA	NA	ND	87	NA	NA
Benzene	330	45	640	13	4.3	ND	4,200	NA	NA	ND	4.3	NA	NA
cis-1,2-Dichloroethene	5	0.065	43,000	4.8	4.3	ND	4,200	NA	NA	ND	4.3	NA	NA
Ethylbenzene	330	40	400,000	110	4.3	ND	4,200	NA	NA	ND	4.3	NA	NA
Isopropylbenzene	5	0.30	570,000	79	4.3	ND	4,200	NA	NA	ND	4.3	NA	NA
p-Isopropyltoluene	NM	NM	NL	ND	4.3	ND	4,200	NA	NA	ND	4.3	NA	NA
n-Propylbenzene	NM	NM	240,000	190	4.3	ND	4,200	NA	NA	ND	4.3	NA	NA
Naphthalene	1,600	180	NL	5	4.3	ND	4,200	NA	NA	ND	4.3	NA	NA
Toluene	5,000	670	520,000	380,000	22,000	**1,700,000**	21,000	NA	NA	ND	4.3	NA	NA
1,2,4-Trimethylbenzene	NM	NM	52	**570**	4.3	ND	4,200	NA	NA	ND	4.3	NA	NA
1,3,5-Trimethylbenzene	NM	NM	21	**230**	4.3	ND	4,200	NA	NA	ND	4.3	NA	NA
Xylene (Total)	10,000	2,900	270,000	300	4.3	4,400	4.2	NA	NA	ND	4.3	NA	NA
m&p-Xylene	NM	NM	NL	**160**	8.6	ND	8,400	NA	NA	ND	8.7	NA	NA
o-Xylene	NM	NM	NL	**140**	4.3	**4,400**	4,200	NA	NA	ND	4.3	NA	NA
Total VOCs	--	--	--	381,801.8	--	1,708,800	--	--	--	ND	--	--	--
Total Organic Carbon	NL	NL	NL	NA	NA	NA	NA	ND	1,000,000	NA	NA	2,960,000	1,000,000

Notes:

= Results above PRG comparative standard
PQL = Practical Quantitation Limit - SW 846 EPA Method 8260B
MDL = Laboratory Report Method Detection Limit Quality Assurance Objectives
PRG = Residential Preliminary Remediation Goal - EPA Region IX from October 2004 or EPA Region IV
µg/kg = Micrograms per Kilogram
ND = Not Detected above applicable reporting limit
NA = Not Analyzed
NL = Not Listed in EPA Region IX PRG table from October 2004
NM = Not Listed with the Safe Drinking Water Act and SW 846 EPA Method 8260B
STB-DUP = Blind Duplicate sample for STB-8 (6-8)
* = Location MW-3 is also location STB-7

Table 2: Summary of Soil and Sediment Sample Results Compared to Standards
Wix Filtration Corporation - Dillon, South Carolina
The Affinia Group, Inc.

Compounds and Constituents	PQL	MDL	PRG	Sediment Sample Results May 24, 2006			
				SED-1		SED-2	
				Result	Report Limit	Result	Report Limit
	(µg/kg)			(µg/kg)		(µg/kg)	
Acetone	20	1.6	14,000,000	120	92	ND	110
Benzene	330	45	640	ND	4.6	ND	5.3
cis-1,2-Dichloroethene	5	0.065	43,000	ND	4.6	ND	5.3
Ethylbenzene	330	40	400,000	ND	4.6	ND	5.3
Isopropylbenzene	5	0.30	570,000	ND	4.6	ND	5.3
p-Isopropyltoluene	NM	NM	NL	**4.9**	4.6	ND	5.3
n-Propylbenzene	NM	NM	240,000	ND	4.6	ND	5.3
Naphthalene	1,600	180	NL	ND	4.6	ND	5.3
Toluene	5,000	670	520,000	ND	4.6	ND	5.3
1,2,4-Trimethylbenzene	NM	NM	52	ND	4.6	ND	5.3
1,3,5-Trimethylbenzene	NM	NM	21	ND	4.6	ND	5.3
Xylene (Total)	10,000	2,900	270,000	ND	4.6	ND	5.3
m&p-Xylene	NM	NM	NL	ND	9.2	ND	11
o-Xylene	NM	NM	NL	ND	4.6	ND	5.3
Total VOCs	--	--	--	124.9	--	ND	--
Total Organic Carbon	NL	NL	NL	NA	NA	NA	NA

Notes:

= Results above PRG comparative standard
PQL = Practical Quantitation Limit - SW 846 EPA Method 8260B
MDL = Laboratory Report Method Detection Limit Quality Assurance Objectives
PRG = Residential Preliminary Remediation Goal - EPA Region IX from October 2004 or EPA Region IV
µg/kg = Micrograms per Kilogram
ND = Not Detected above applicable reporting limit
NA = Not Analyzed
NL = Not Listed in EPA Region IX PRG table from October 2004
NM = Not Listed with the Safe Drinking Water Act and SW 846 EPA Method 8260B
STB-DUP = Blind Duplicate sample for STB-8 (6-8)

Table 3: Summary of Ground Water and Surface Water Sample Results Compared to Standards
Wix Filtration Corporation - Dillon, South Carolina
The Affinia Group, Inc.

Compounds and Constituents	PQL	MDL	MCL	PRG	Ground Water Sample Results							
					May 25, 2006		May 24, 2006					
					MW-1		MW-2		MW-3		MW-4	
					Result	Report Limit	Result	Report Limit	Result	Report Limit	Result	Report Limit
	(µg/L)				(µg/L)		(µg/L)		(µg/L)		(µg/L)	
Acetone	10	0.49	NF	5,500	ND	50,000	ND	25	ND	50,000	**27**	25
Benzene	1	0.096	5	0.35	ND	2,000	**21**	1	ND	2,000	**27**	1
2-Butanone	10	0.39	NF	7,000	ND	2,000	ND	1	ND	2,000	**6.6**	5
cis-1,2-Dichloroethene	0.5	0.059	70	61	ND	2,000	ND	1	ND	2,000	4.8	1
1,2-Dichloroethene (Total)	1	0.169	170	181	ND	1	ND	1	ND	1	5.1	1
Ethylbenzene	1	0.22	700	1,300	ND	2,000	3	1	ND	2,000	3.4	1
Isopropylbenzene	1	0.15	NF	660	ND	2,000	ND	1	ND	2,000	ND	1
p-Isopropyltoluene	NM	NM	NF	NL	ND	2,000	ND	1	ND	2,000	ND	1
n-Propylbenzene	NM	NM	NF	240	ND	2,000	ND	1	ND	2,000	**1.1**	1
Naphthalene	10	0.72	NF	NL	ND	2,000	ND	1	ND	2,000	ND	1
Toluene	1	0.13	1,000	720	**340,000**	2,000	**11,000**	250	**210,000**	2,000	**41,000**	500
1,2,4-Trimethylbenzene	NM	NM	NF	12	ND	2,000	ND	1	**2,100**	2,000	ND	1
1,3,5-Trimethylbenzene	NM	NM	NF	12	ND	2,000	ND	1	ND	2,000	**1.6**	1
Xylene (Total)	1	0.58	10,000	210	230	1	2.8	1	ND	1.0	9.3	1
m&p-Xylene	NM	NM	NF	NL	ND	4,000	**2.4**	2	ND	4,000	**4.1**	2
o-Xylene	NM	NM	NF	NL	ND	2,000	ND	1	ND	2,000	**5.2**	1
Total VOCs	--	--	--	--	340,230	--	11,029.2	--	212,100	--	41,095.2	--

Notes:

= Results above MCL comparative standard
µg/L = Micrograms per Liter
PQL = Practical Quantitation Limit - SW 846 EPA Method 8260B
MDL = Laboratory Report Method Detection Limit Quality Assurance Objectives - SW 846 EPA Method 8260B
MCL = Maximum Contaminant Level is the highest level that is allowed in drinking water according to South Carolina Class GB Ground Water Standards
PRG = Residential Preliminary Remediation Goal - EPA Region IX from October 2004
NL = Not listed in EPA Region IX PRG table from October 2004
NF = Not found in South Carolina Class GB Ground Water Standards or EPA National Primary or Secondary Drinking Water Standards
ND = Not detected above reporting limit
NM = Not listed with the Safe Drinking Water Act and SW 846 EPA Method 8260B
DUP-1 = Duplicate sample for MW-3
EB-1 = Equipment Blank
FB-1 = Field Blank

Table 3: Summary of Ground Water and Surface Water Sample Results Compared to Standards
Wix Filtration Corporation - Dillon, South Carolina
The Affinia Group, Inc.

Compounds and Constituents	PQL	MDL	MCL	PRG	Ground Water Sample Results					
					May 24, 2006		May 25, 2006			
					DUP-1		EB-1		FB-1	
					Result	Report Limit	Result	Report Limit	Result	Report Limit
	(µg/L)				(µg/L)		(µg/L)		(µg/L)	
Acetone	10	0.49	NF	5,500	ND	50,000	ND	25	ND	25
Benzene	1	0.096	5	0.35	ND	2,000	ND	1	ND	1
2-Butanone	10	0.39	NF	7,000	ND	2,000	ND	1	ND	1
cis-1,2-Dichloroethene	0.5	0.059	70	61	ND	2,000	ND	1	ND	1
1,2-Dichloroethene (Total)	1	0.169	170	181	ND	1	ND	1	ND	1
Ethylbenzene	1	0.22	700	1,300	ND	2,000	ND	1	ND	1
Isopropylbenzene	1	0.15	NF	660	ND	2,000	ND	1	ND	1
p-Isopropyltoluene	NM	NM	NF	NL	ND	2,000	ND	1	ND	1
n-Propylbenzene	NM	NM	NF	240	ND	2,000	ND	1	ND	1
Naphthalene	10	0.72	NF	NL	ND	2,000	ND	1	ND	1
Toluene	1	0.13	1,000	720	**220,000**	2,000	ND	1	ND	1
1,2,4-Trimethylbenzene	NM	NM	NF	12	**2,100**	2,000	ND	1	ND	1
1,3,5-Trimethylbenzene	NM	NM	NF	12	ND	2,000	ND	1	ND	1
Xylene (Total)	1	0.58	10,000	210	ND	1.0	ND	1	ND	1
m&p-Xylene	NM	NM	NF	NL	ND	4,000	ND	2	ND	2
o-Xylene	NM	NM	NF	NL	ND	2,000	ND	1	ND	1
Total VOCs	--	--	--	--	222,100	--	ND	--	ND	--

Notes:

= Results above MCL comparative standard

µg/L = Micrograms per Liter

PQL = Practical Quantitation Limit - SW 846 EPA Method 8260B

MDL = Laboratory Report Method Detection Limit Quality Assurance Objectives - SW 846 EPA Method 8260B

MCL = Maximum Contaminant Level is the highest level that is allowed in drinking water according to South Carolina Class GB Ground Water Standards

PRG = Residential Preliminary Remediation Goal - EPA Region IX from October 2004

NL = Not listed in EPA Region IX PRG table from October 2004

NF = Not found in South Carolina Class GB Ground Water Standards or EPA National Primary or Secondary Drinking Water Standards

ND = Not detected above reporting limit

NM = Not listed with the Safe Drinking Water Act and SW 846 EPA Method 8260B

DUP-1 = Duplicate sample for MW-3

EB-1 = Equipment Blank

FB-1 = Field Blank

Table 3: Summary of Ground Water and Surface Water Sample Results Compared to Standards
Wix Filtration Corporation - Dillon, South Carolina
The Affinia Group, Inc.

Compounds and Constituents	PQL	MDL	MCL	PRG	Surface Water Results May 24, 2006 SW-1 Result	SW-1 Report Limit	SW-2 Result	SW-2 Report Limit
	(µg/L)				(µg/L)		(µg/L)	
Acetone	10	0.49	NF	5,500	ND	25	ND	25
Benzene	1	0.096	5	0.35	ND	1	ND	1
2-Butanone	10	0.39	NF	7,000	ND	1	ND	1
cis-1,2-Dichloroethene	0.5	0.059	70	61	ND	1	ND	1
1,2-Dichloroethene (Total)	1	0.169	170	181	ND	1	ND	1
Ethylbenzene	1	0.22	700	1,300	ND	1	ND	1
Isopropylbenzene	1	0.15	NF	660	ND	1	ND	1
p-Isopropyltoluene	NM	NM	NF	NL	ND	1	ND	1
n-Propylbenzene	NM	NM	NF	240	ND	1	ND	1
Naphthalene	10	0.72	NF	NL	ND	1	ND	1
Toluene	1	0.13	1,000	720	ND	1	ND	1
1,2,4-Trimethylbenzene	NM	NM	NF	12	ND	1	ND	1
1,3,5-Trimethylbenzene	NM	NM	NF	12	ND	1	ND	1
Xylene (Total)	1	0.58	10,000	210	ND	1	ND	1
m&p-Xylene	NM	NM	NF	NL	ND	2	ND	2
o-Xylene	NM	NM	NF	NL	ND	1	ND	1
Total VOCs	--	--	--	--	ND	--	ND	--

Notes:

= Results above MCL comparative standard

µg/L = Micrograms per Liter

PQL = Practical Quantitation Limit - SW 846 EPA Method 8260B

MDL = Laboratory Report Method Detection Limit Quality Assurance Objectives - SW 846 EPA Method 8260B

MCL = Maximum Contaminant Level is the highest level that is allowed in drinking water according to South Carolina Class GB Ground Water Standards

PRG = Residential Preliminary Remediation Goal - EPA Region IX from October 2004

NL = Not listed in EPA Region IX PRG table from October 2004

NF = Not found in South Carolina Class GB Ground Water Standards or EPA National Primary or Secondary Drinking Water Standards

ND = Not detected above reporting limit

NM = Not listed with the Safe Drinking Water Act and SW 846 EPA Method 8260B

DUP-1 = Duplicate sample for MW-3

EB-1 = Equipment Blank

FB-1 = Field Blank

Figures

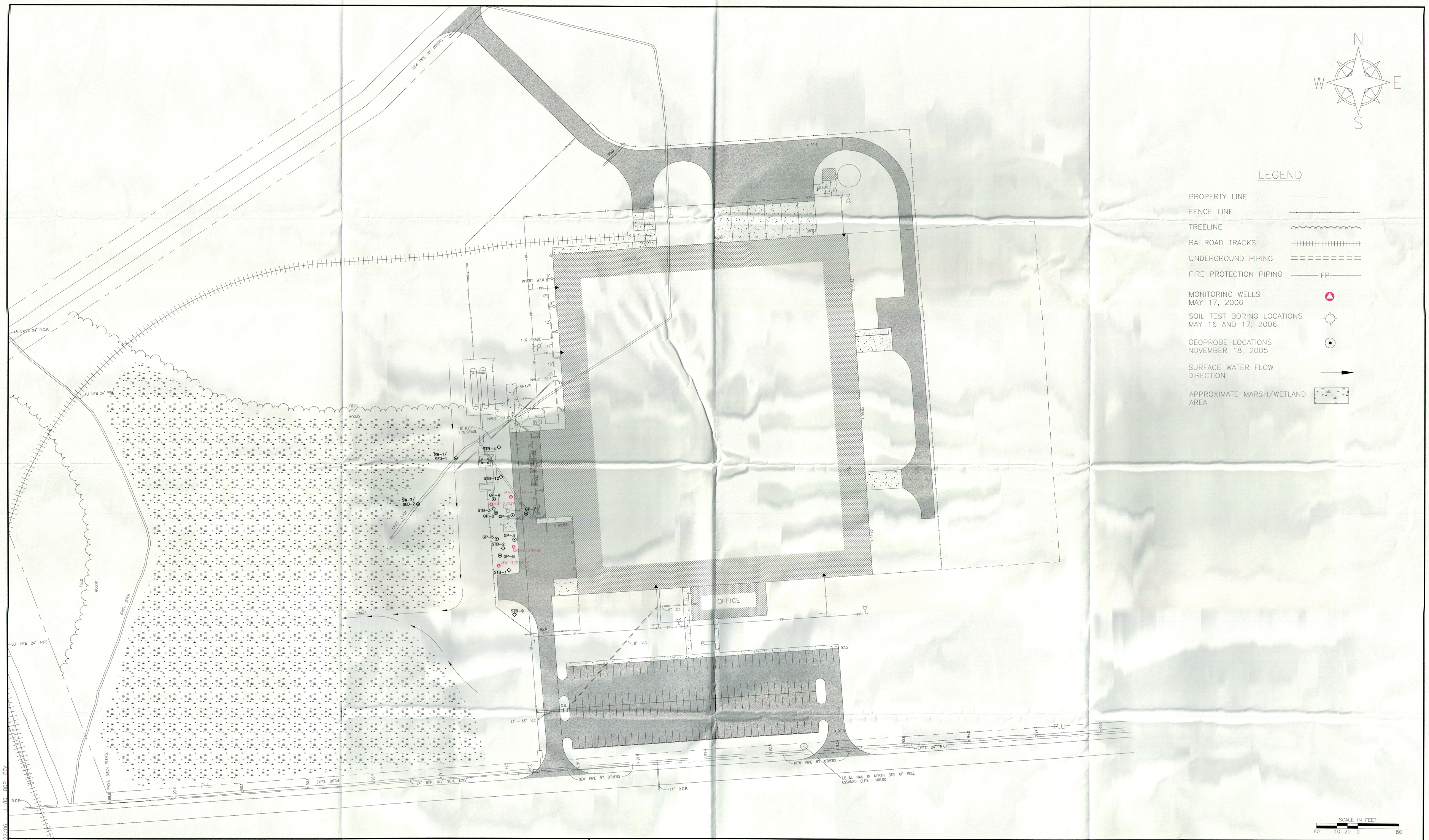

NO.	DATE	APPR.	REVISION	REVISION

WIX FILTRATION CORPORATION

AFFINIA GROUP INC. — DILLON, SOUTH CAROLINA

DRAWN BY: DDP	PROJECT ENGINEER: MCE
DESIGN ENGINEER: –	PROJECT MANAGER: TWM

ERM

NOT FOR CONST-RUCTION

FACILITY SITE PLAN

SCALE: 1"=80'	DATE: JUNE 22, 2006
PROJECT NO.: 41284	AutoCAD 2007 06-06-BASEMAP-02

DRAWING NO. 1

REV. NO.

SHEET 1 OF 1

06-06-BASEMAP-02.DWG 6/22/06 1=80 DDP REV

403139 A7

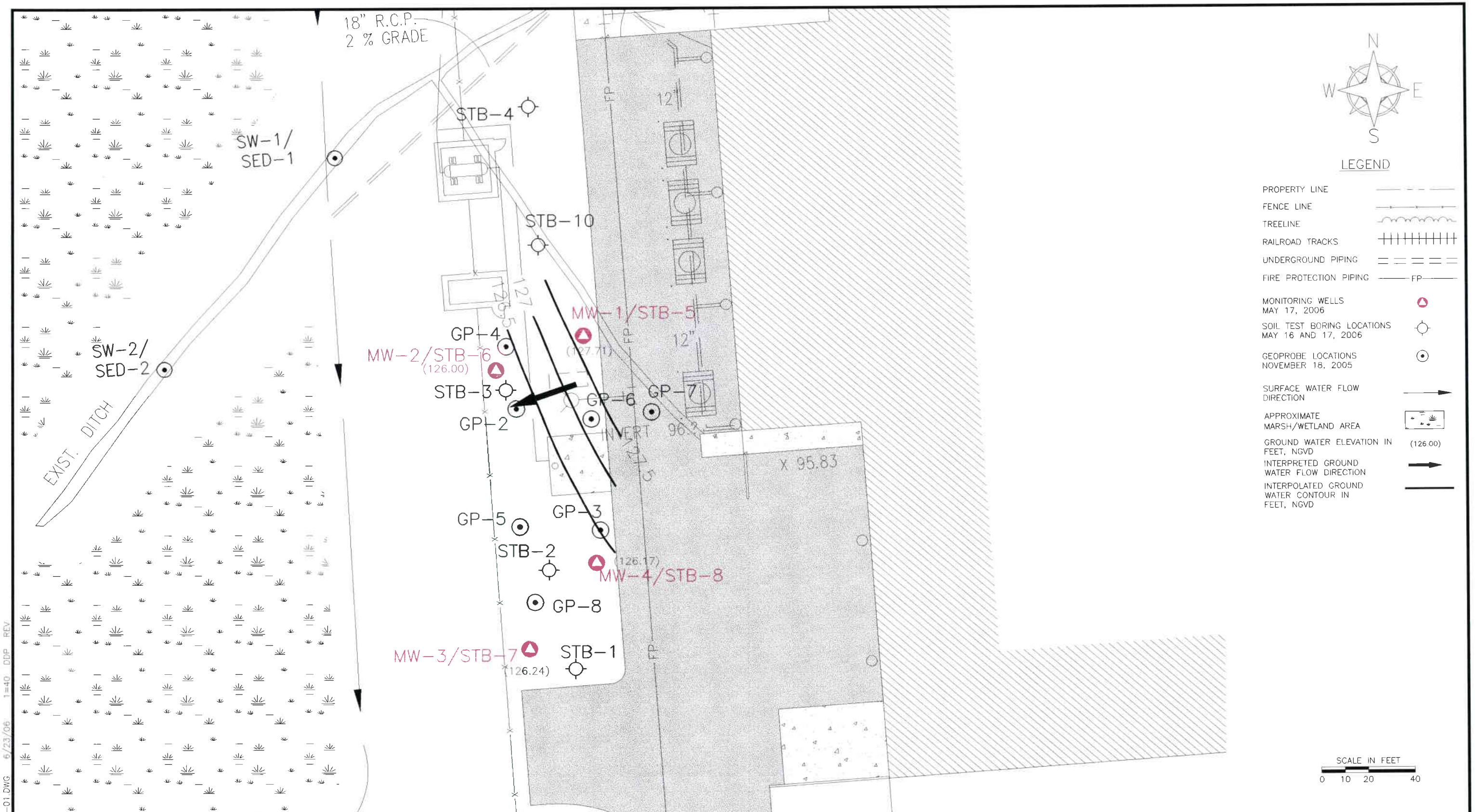

Environmental Resources Management

POTENTIOMETRIC SURFACE MAP
WIX FILTRATION CORPORATION
DILLON, SC

FIGURE
2

41284 06-06-POT-01.DWG 6/23/06 1=40 DDP REV