403139

Letter of Transmittal

Environmental Resources Management

498 Wando Park Blvd.
Suite 100
Mt. Pleasant SC 29464
(843) 856-4270
(843) 856-4283 (fax)

DATE: 10/30/2008

PROJECT NUMBER: 86002

TO: SCDHEC
BUREAU OF LAND AND WASTE MANAGEMENT

ATTENTION:
B. Tom Knight, P.G.

RECEIVED
NOV 0 3 2008
LAND REVITALIZATION DIVISION - BLWM

SCANNED
3/19/2018 dp

ERM

WE ARE SENDING YOU:

☒ Attached ☐ Under separate cover via:

☐ Shop drawings ☐ Prints ☐ Plans ☐ Samples
☐ Specifications ☐ Copy of letter ☐ Change order
☐ diskette

COPIES	DESCRIPTION
2	Air-Sparge/Soil Vapor Extraction System Design – Wix Filtration Corporation

THESE ARE TRANSMITTED AS CHECKED BELOW

☒ For approval ☐ Approved as submitted ☐ Resubmit ___ copies for approval
☐ For your use ☐ Approved as noted ☐ Submit ___ copies for distribution
☐ As requested ☐ Returned for corrections ☐ Returned ___ corrected prints
☒ For review and comment ☐ **Prints returned after loan to us**
☐ **For bids due** _____ ☐ (other) _____

REMARKS

Tom,

Please find enclosed two copies of the final air-sparge/soil vapor extraction system design drawings for your comment and approval. Let us know if you have any concerns or questions.

COPY TO:

SIGNED:

If enclosures are not as noted, kindly notify us at once.

A33

D 3139

403139

Environmental
Resources
Management

498 Wando Park Blvd.
Suite 100
Mt. Pleasant, SC 29464
(843) 856-4270
(843) 856-4283 (fax)

SCANNED

RECEIVED

NOV 0 3 2008

LAND REVITALIZATION
DIVISION - BLWM

ERM

October 30, 2008
86002

Mr. B. Tom Knight, P.G.
South Carolina Department of Health
and Environmental Control
Bureau of Land and Waste Management
2600 Bull Street
Columbia, South Carolina 29201

Subject: Air-Sparge/Soil Vapor Extraction System Design
Wix Filtration Corporation - Dillon, South Carolina
The Affinia Group, Inc.
ERM Project: 86002

Region 4

Dear Mr. Knight:

Environmental Resources Management (ERM) is pleased to present these design drawings on behalf of our client, The Affinia Group, Inc. for their subsidiary, Wix Filtration Corporation. These drawings are provided as a result of an approved air-sparge/soil vapor extraction (AS/SVE) pilot test conducted on August 14, 2008. The pilot test was conducted in an effort to determine site-specific data necessary for sizing a full-scale design of an AS/SVE system to remediate the suspected historical toluene release area (i.e. "source area"). According to the revised AS/SVE implementation schedule dated September 30, 2008 (approved by SCDHEC on October 1, 2008), the system is to be installed beginning in February 2009 for remediation of the source area.

Based on the results of the pilot test that included installation of an approved temporary SVE monitoring well (see Attachment A for boring log and well record), a full-scale SVE system design was completed. The design drawings are included in Attachment B. The full scale system will include five air-sparge wells installed to the top of the perceived clay layer and two horizontal SVE wells at 3½ feet in depth. The location of these wells is shown as Drawing S-1 in Attachment B. The horizontal SVE wells will be installed in a four-inch layer of No. 2 filter sand. The areal extent of the filter sand is shown on Drawing S-1 in Attachment B. Air will be injected into the five air sparge wells at a rate of five standard cubic feet per minute (scfm) each with 25 scfm in total. A rotary vane air compressor will supply the air. To achieve air sparge vapor capture, soil vapor will be extracted at twice the rate of air sparge, which is 50 scfm. The soil vapor will be

A33

extracted with an explosion-proof regenerative blower. The SVE off-gas will be treated with granular activated carbon (GAC). Two GAC adsorber canisters will be installed for SVE off-gas treatment. The treatment equipment will be housed in a steel building on-site.

Wix will continue to monitor wells MW-1 through MW-4 and MW-7 for volatile organic compounds on a semi-annual basis during implementation, operation, and maintenance of the AS/SVE system. Please review the enclosed design drawings and provide comments at your earliest convenience. Should you have any questions regarding these system design drawings, or the project in general, please do not hesitate to contact us at 843-856-4270.

Sincerely,

Mark Easterbrook
Project Manager

Hunter Sartain
Principal-in-Charge

Attachments

cc: (via electronic transmission)
Mr. Richard P. Fahey, Esq. - Vorys, Sater, Seymour and Pease LLP
Mr. Keith Clark – The Affinia Group
Mr. James Hiller – ERM
Ms. Melody Christopher – ERM
Mr. Ken McCutcheon – Wix Filtration Corporation
Mr. Paul H. Caulford, Jr. – Wix Filtration Corporation

Attachment A
ERM Boring Log and Well Record

Client: The Affinia Group, Inc.

Site Location: Wix Filtration Corp.

City, State: Dillon, SC

Project Number: 86002

Log of Borehole: SVE-1

Drilled By: Environmental Resources Mgmt.

Logged By: S. Matthews

SUBSURFACE PROFILE

Depth (ft. BGS)	Symbol	Description	Well Installation Diagram	Remarks
-3				Background PID - 0.0 ppm
-2				
-1				
0		Ground Surface		Top of casing
		Soft, dark gray organic topsoil, with grass cover.		Grout
1		Gray, silty SAND, odor.		
		Gray, clayey SILT, plastic, slightly moist.		Bentonite Holeplug
2				2-inch stainless steel casing
3				NSF No. 2 Filter Sand Pack
4				Top of 0.020-inch slotted stainless steel screen
5		Becoming brownish red, clayey silt, very moist.		
6				Bottom of well
		End of Borehole		
7				
8				
9				

Driller: Ron Yarborough, P.G.

Drill and Installation Date: 8/13/2008

Drilling Method: Post Hole Digger/Auger

ERM

Environmental Resources Management
498 Wando Park Blvd.
Suite 100
Mt. Pleasant, SC 29464

Borehole Diameter: 6 inches

Total Depth: 6.3 feet

Sheet: 1 of 1

Water Well Record
Bureau of Water
2600 Bull Street, Columbia, SC 29201-1708; (803) 898-4300

1. WELL OWNER INFORMATION:
Name: The Affinia Group, Inc. (last) Mr. Keith Clark (first)
Address: 2900 Northwest Boulevard
City: Gastonia State: NC Zip: 28052-0000
Telephone: Work: (704) 864-6711 Home:

2. LOCATION OF WELL: SVE-1 **COUNTY:** Dillon
Name: Wix Filtration Corporation
Street Address: 1422 Wix Road
City: Dillon Zip: 29536-7939
Latitude: 954815.48 Longitude: 2486315.33

3. PUBLIC SYSTEM NAME: **PUBLIC SYSTEM NUMBER:** SVE-1

4. ABANDONMENT: ☑ Yes ☐ No
Grouted Depth: from 0 ft. to 6.3 ft.

Formation Description	*Thickness of Stratum	Depth to Bottom of Stratum
Black, organic, gray topsoil	0.5'	0.5'
Gray, silty SAND, slight odor	1.0'	1.5'
Gray, clayey SILT, odor	4.0'	5.5'
Brownish-red, clayey SILT, odor	0.8'	6.3'
*Indicate Water Bearing Zones (Use a 2nd sheet if needed)	above zone	

5. REMARKS:
Temporary monitoring well for SVE pilot test installed above water table

6. TYPE: ☐ Mud Rotary ☐ Jetted ☑ Bored ☐ Dug ☐ Air Rotary ☐ Driven ☐ Cable tool ☐ Other

7. PERMIT NUMBER: 3413

8. USE: ☐ Residential ☐ Public Supply ☐ Process ☐ Irrigation ☐ Air Conditioning ☐ Emergency ☐ Test Well ☑ Monitor Well ☐ Replacement

9. WELL DEPTH (completed) Date Started: 8.12.08
6.0 ft. Date Completed: 8.12.08

10. CASING: ☑ Threaded ☐ Welded
Diam.: 2"
Type: ☐ PVC ☐ Galvanized ☑ Steel ☐ Other
2 in. to 4.0 ft. depth
_____ in. to _____ ft. depth
Height: Above ☐ Below ☐
Surface _____ ft.
Weight _____ lb./ft.
Drive Shoe? ☐ Yes ☐ No

11. SCREEN:
Type: Stainless Steel Diam.: 2"
Slot/Gauge: 0.020" slotted Length: 2.0'
Set Between: 4.0 ft. and 6.0 ft.
_____ ft. and _____ ft.
NOTE: MULTIPLE SCREENS USE SECOND SHEET
Sieve Analysis ☐ Yes (please enclose) ☑ No

12. STATIC WATER LEVEL Above water table ft. below land surface after 24 hours

13. PUMPING LEVEL Below Land Surface.
NA ft. after _____ hrs. Pumping _____ G.P.M.
Pumping Test: ☐ Yes (please enclose) ☐ No
Yield: _____

14. WATER QUALITY
Chemical Analysis ☐ Yes ☑ No Bacterial Analysis ☐ Yes ☑ No
Please enclose lab results.

15. ARTIFICIAL FILTER (filter pack) ☑ Yes ☐ No
Installed from 2.3 ft. to 6.3 ft.
Effective size #2 sand Uniformity Coefficient _____

16. WELL GROUTED? ☑ Yes ☐ No
☐ Neat Cement ☐ Bentonite ☑ Bentonite/Cement ☐ Other _____
Depth: From 0 ft. to 2.3 ft.

17. NEAREST SOURCE OF POSSIBLE CONTAMINATION: 5 ft. W direction
Type VOCs
Well Disinfected ☐ Yes ☑ No Type: _____ Amount: _____

18. PUMP: Date Installed: _____ Not installed ☑
Mfr. Name: _____ Model No.: _____
H.P. _____ Volts _____ Length of drop pipe ___ ft. Capacity ___ gpm
TYPE: ☐ Submersible ☐ Jet (shallow) ☐ Turbine ☐ Jet (deep) ☐ Reciprocating ☐ Centrifugal

19. WELL DRILLER: Ron Yarborough **CERT. NO.:** 1413
Address: (Print) Level: A B C D (circle one) ☐ ☑ ☐ ☐
498 Wando Park Blvd., Suite 100
Mt. Pleasant, SC 29464
Telephone No.: 843.856.4270 Fax No.: 843.856.4283

20. WATER WELL DRILLER'S CERTIFICATION: This well was drilled under my direction and this report is true to the best of my knowledge and belief.
Signed: Ronald Yarborough (Well Driller) Date: 9.09.08
If D Level Driller, provide supervising driller's name:

DHEC 1903 (07/2003) COPY 1 MAIL TO: S.C. DEPARTMENT OF HEALTH AND ENVIRONMENTAL CONTROL (ADDRESS ABOVE)

Attachment B
ERM Air-Sparge/Soil Vapor
Extraction Design Drawings

SOIL AND GROUND WATER REMEDIATION SYSTEM

WIX FILTRATION CORPORATION
DILLON, SOUTH CAROLINA

SITE LOCATION MAP

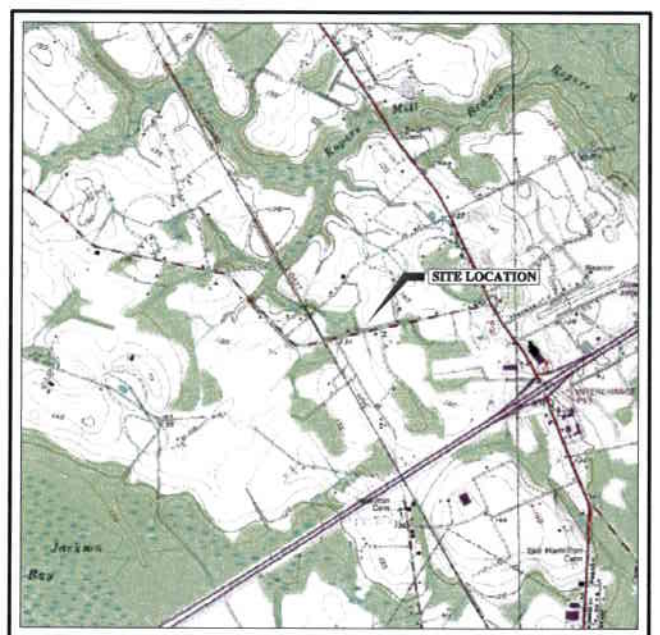

SOURCE: USGS 7.5 MINUTE TOPOGRAPHIC QUADRANGLE: DILLON WEST, SOUTH CAROLINA – 1983

SCALE 1:24000

1 1/2 0

1000 0 1000 2000 3000 4000 5000 6000 7000 FEET

SOUTH CAROLINA

QUADRANGLE LOCATION

CONTOUR INTERVAL 10 FEET
DOTTED LINES REPRESENT 5-FOOT CONTOURS
NATIONAL GEODETIC VERTICAL DATUM OF 1929

N

INDEX OF DRAWINGS

MDH REV. 10/14/08

86002SRS.DWG 9/19/08

NO.	DATE	APPR.	REVISION	NO.	DATE	APPR.	REVISION

SOIL AND GROUND WATER REMEDIATION SYSTEM

WIX FILTRATION CORPORATION — DILLON, SOUTH CAROLINA

DRAWN BY: M. HYRE	PROJECT ENGINEER: H. SARTAIN
DESIGN ENGINEER: T. HARBAGE	PROJECT MANAGER: M. EASTERBROOK

ERM

NOT FOR CONSTRUCTION

COVER SHEET

SCALE: AS NOTED	DATE: SEPTEMBER 22, 2008
PROJECT NO.: 0086002	AutoCAD 2007: 86002SRS.DWG

DRAWING NO. 1

REV. NO. 0

SHEET 1 OF 6

LEGEND

MW-1	MONITORING WELL
AS-5	AIR SPARGE WELL
	FIRE HYDRANT
	ASPHALT PAVING
	CONCRETE PAVING
	CONCRETE
	MARSH/ WETLAND AREA
	HORIZONTAL SVE WELL VAULT
	HORIZONTAL SVE WELL END VAULT
	SVE HEADER
	AS SUPPLY HOSES
FP	FIRE PROTECTION PIPING
	COLLECTION TRENCH
	STREAM OR DITCH
	FENCE
	PROPOSED HORIZONTAL SVE WELL
	TREE LINE
	MAIN POWER
P	ELECTRICAL POWER
NG/P	NATURAL GAS/ PROPANE
	TELEPHONE LINE
D/S	DRAIN LINE AND SEWERS
	UNDERGROUND PIPING

NOTES

1. THE CONTRACTOR SHALL ESTABLISH SEDIMENT AND EROSION CONTROLS PRIOR TO INITIATING CONSTRUCTION ACTIVITIES.
2. CONTAMINATED SOIL SHALL BE STOCKPILED PRIOR TO OFF-SITE DISPOSAL. THE CONTAMINATED SOIL STOCKPILE AREA SHALL BE BERMED WITH SANDBAGS OR HAY BAILS TO PREVENT EROSION OF CONTAMINATED SOILS OUTSIDE THE DESIGNATED AREA.
3. AIR SPARGE WELLS SHALL BE SCREENED IN THE SILTY CLAY LAYER, WITH THE BOTTOM OF THE SCREEN AT THE TOP OF THE CONFINING CLAY LAYER. THIS DEPTH IS EXPECTED TO BE 8 FEET.
4. AIR SPARGE WELL DIAMETER IS ONE INCH.
5. AIR SPARGE SUPPLY HOSE AND SVE HEADER PIPE LOCATIONS ARE APPROXIMATE. CONTRACTOR TO DETERMINE EXACT HEADER LOCATIONS PRIOR TO CONSTRUCTION. WHERE POSSIBLE, CONTRACTOR TO PLACE HEADERS IN COMMON TRENCHES. AIR SPARGE SUPPLY HOSE TO BE LABELED EVERY 50 FT.
6. TO RECOVER THE AIR INJECTION FLOW, THE NATIVE SOIL SVE SYSTEM WILL EXTRACT 2 TIMES THE TOTAL AIR FLOW RATE OF THE AIR SPARGE SYSTEM.

N

SCALE IN FEET
20 10 5 0 20

PRELIMINARY

MDH REV 10/27/08

9/19/08

86002SRS.DWG

NO.	DATE	APPR.	REVISION	NO.	DATE	APPR	REVISION

SOIL AND GROUND WATER REMEDIATION SYSTEM

WIX FILTRATION CORPORATION — DILLON, SOUTH CAROLINA

DRAWN BY: M. HYRE	PROJECT ENGINEER: H. SARTAIN
DESIGN ENGINEER: T. HARBAGE	PROJECT MANAGER: M. EASTERBROOK

ERM

NOT FOR CONSTRUCTION

AIR SPARGE / SOIL VAPOR EXTRACTION SYSTEM LAYOUT

SCALE: 1"=20'	DATE: SEPTEMBER 22, 2008
PROJECT NO: 0086002	AutoCAD 2007: 86002SRS.DWG

DRAWING NO. S-1

REV. NO.

SHEET 2 OF 6

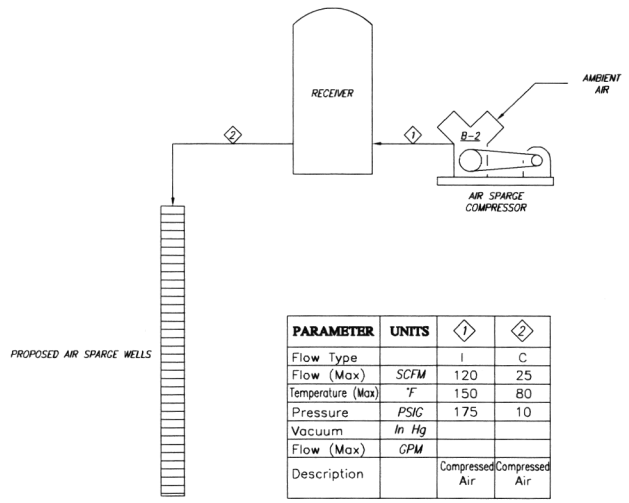

PARAMETER	UNITS	1	2
Flow Type		I	C
Flow (Max)	SCFM	120	25
Temperature (Max)	°F	150	80
Pressure	PSIG	175	10
Vacuum	In Hg		
Flow (Max)	GPM		
Description		Compressed Air	Compressed Air

C = CONTINUOUS
I = INTERMITENT

AIR SPARGE SYSTEM PROCESS FLOW DIAGRAM

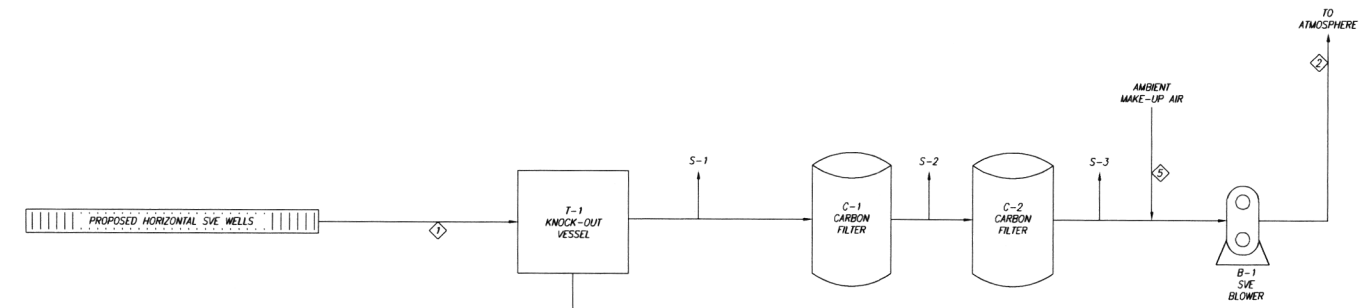

PARAMETER	UNITS	1	2	3	4	5
Flow Type		C	C	I	I	C
Flow (Max)	SCFM	50	50			50
Temperature (Max)	°F	90	150	80	80	90
Pressure	PSIG		1	20	40	0
Vacuum	In Hg	5				
Flow (Max)	GPM			5	20	
Description		SVE Air	SVE Exhaust	Condensate Blow Down	Condensate Disposal	Make-Up Air

C = CONTINUOUS
I = INTERMITENT

SOIL VAPOR EXTRACTION SYSTEM

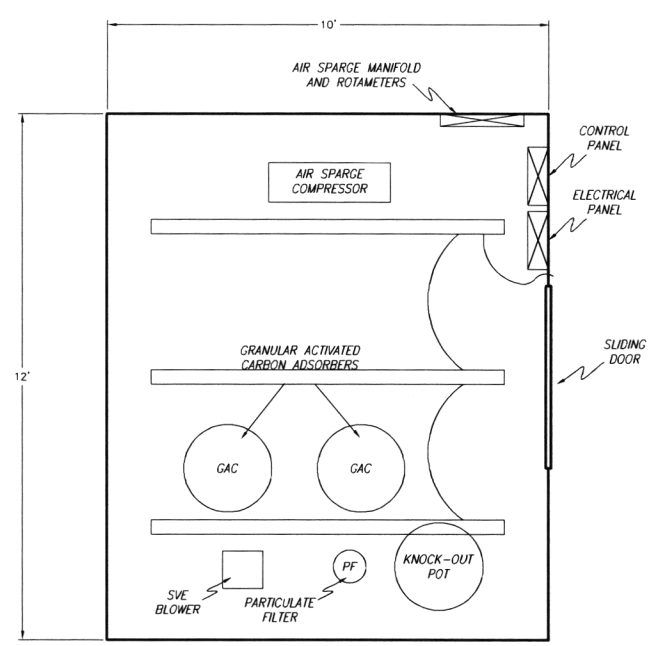

EQUIPMENT LAYOUT

NOTES

BUILDING TO BE PRE-ENGINEERED GALVANIZED STEEL
(McMASTER CARR MODEL # 6749T42 OR EQUIVALENT)

PRELIMINARY

NO.	DATE	APPR.	REVISION	NO.	DATE	APPR.	REVISION

SOIL AND GROUND WATER REMEDIATION SYSTEM

WIX FILTRATION CORPORATION — **DILLON, SOUTH CAROLINA**

DRAWN BY: M. HYRE	PROJECT ENGINEER: H. SARTAIN
DESIGN ENGINEER: T. HARBAGE	PROJECT MANAGER: M. EASTERBROOK

ERM

NOT FOR CONSTRUCTION

SVE SYSTEM EQUIPMENT LAYOUT AND PROCESS FLOW DIAGRAM

SCALE: 1"=2'	DATE: SEPTEMBER 22, 2008
PROJECT NO.: 0086002	AutoCAD 2007: 86002SRS.DWG

DRAWING NO. **P-1**

REV. NO.

SHEET **3** OF **6**

86002SRS.DWG 9/19/08 MDH REV 10/28/08 1700

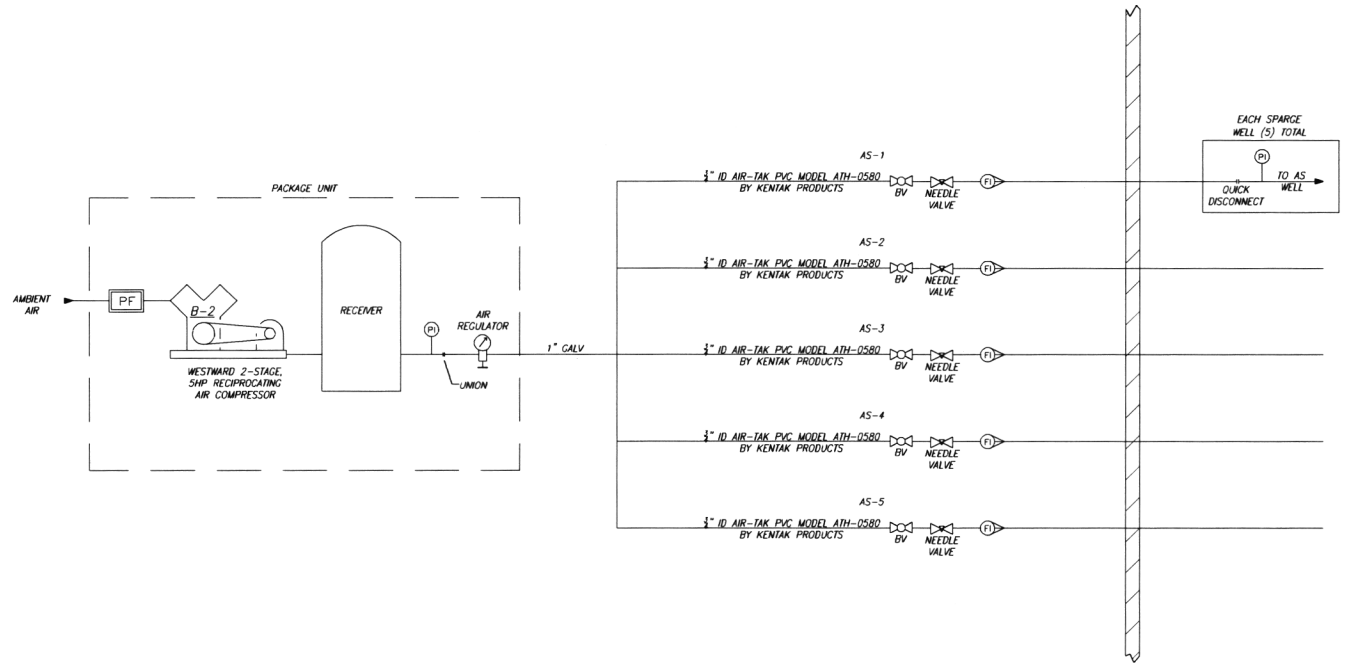

AIR SPARGE SYSTEM PIPING & INSTRUMENTATION DETAIL

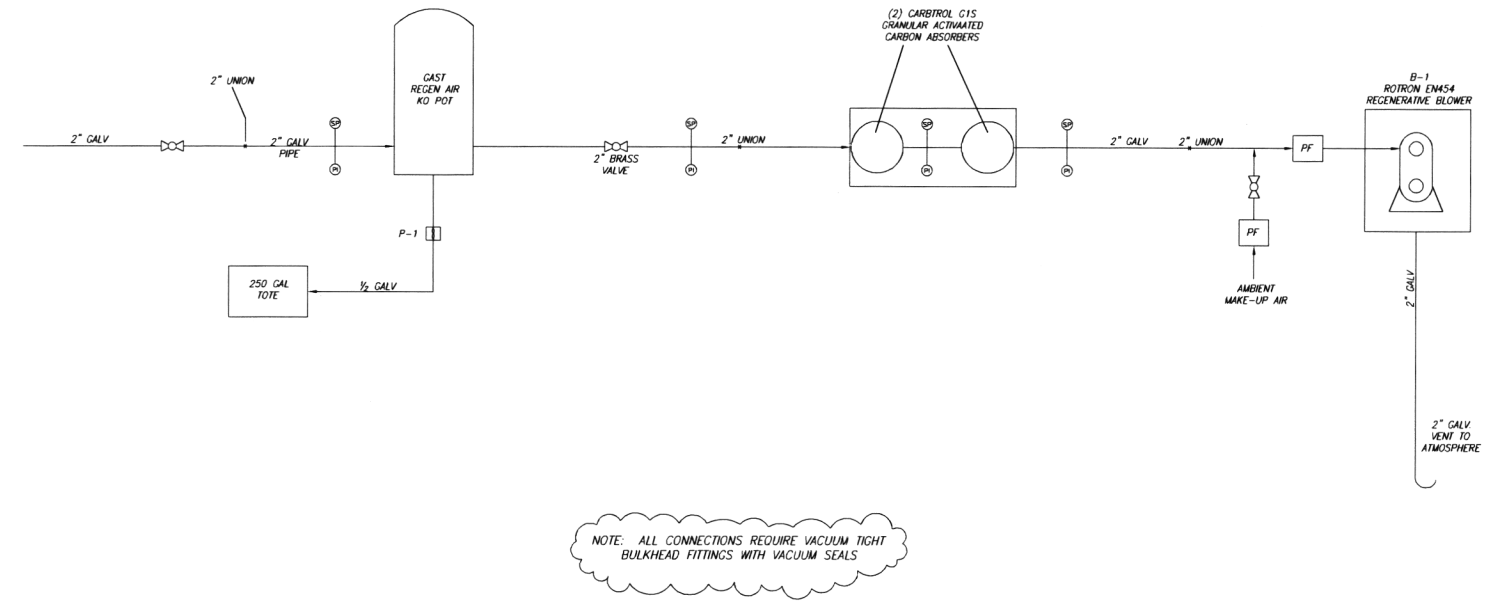

SVE SYSTEM PROCESS & INSTRUMENTATION DIAGRAM

LEGEND

- BRASS BALL VALVE
- PRESSURE INDICATOR (McMASTER CARR 3941K53)
- SAMPLE PORT
- PIPE ADAPTOR
- PIPE UNION

NOTES

1. ALL INSTALLATIONS SHALL COMPLY WITH APPLICABLE ASME, NIST, NFPA, NEC CODES AND MANUFACTURER'S RECOMMENDATIONS
2. PIPING SYSTEMS SHALL BE VACUUM TESTED FOR TIGHTNESS AND LEAKS SHALL BE REPAIRED AT NO ADDITIONAL COSTS

MDH REV 10/14/08

NO.	DATE	APPR.	REVISION	NO.	DATE	APPR.	REVISION

9/19/08

86002SRS.DWG

SOIL AND GROUND WATER REMEDIATION SYSTEM

WIX FILTRATION CORPORATION — **DILLON, SOUTH CAROLINA**

DRAWN BY M. HYRE	PROJECT ENGINEER H. SARTAIN
DESIGN ENGINEER T. HARBAGE	PROJECT MANAGER M. EASTERBROOK

ERM

NOT FOR CONSTRUCTION

PROCESS AND INSTRUMENTATION DIAGRAMS

SCALE 1"=20'	DATE SEPTEMBER 22, 2008
PROJECT NO 0086002	AutoCAD 2007 86002SRS.DWG

DRAWING NO. **P-2**

REV. NO. **0**

SHEET **4** OF **6**

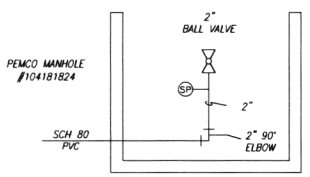

HORIZONTAL SVE WELL END VAULT E

(CROSS-SECTION)

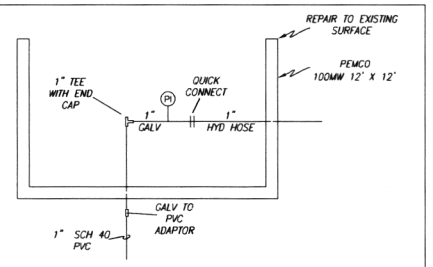

AIR SPARGE WELL

(CROSS-SECTION)

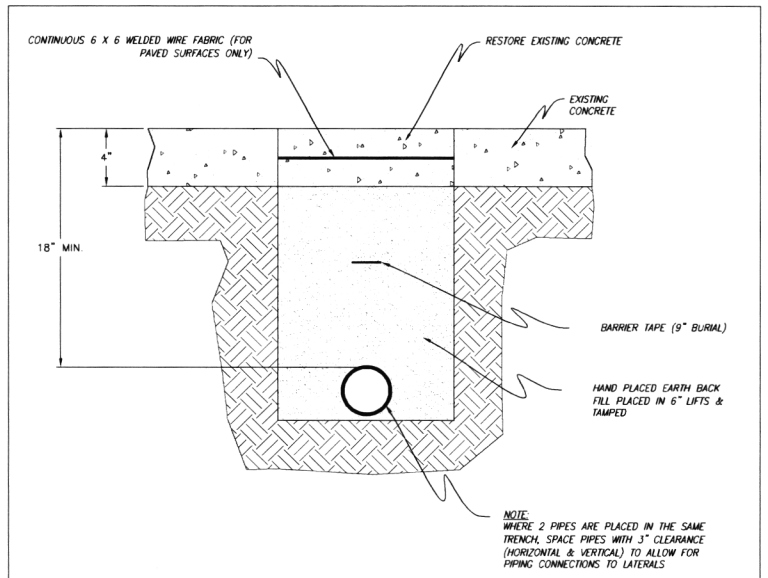

TYPICAL HEADER CROSS-SECTION IN EXISTING CONCRETE

1" = 6"

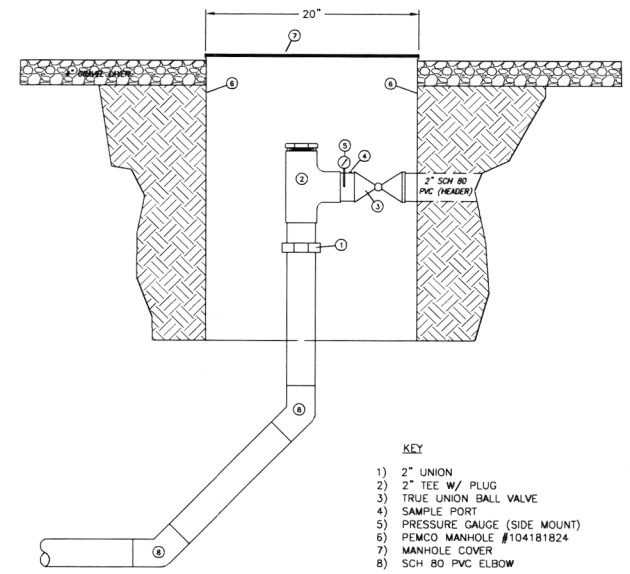

HORIZONTAL SVE DETAIL H

NOT TO SCALE

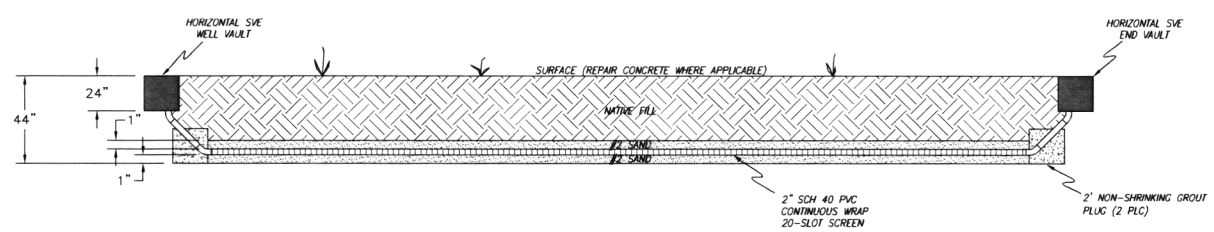

HORIZONTAL SVE WELL DETAIL

(NOT TO SCALE)

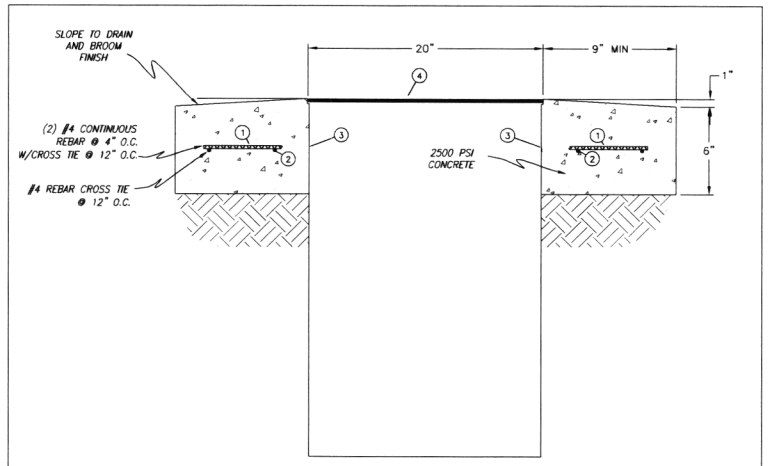

KEY

1) (2) #4 REBAR CONTINUOUS 4" O.C.
2) #4 REBAR CROSS TIE @12" O.C.
3) PEMCO MANHOLE #104202024
4) MANHOLE COVER

CONCRETE REPAIR FOR SVE VAULTS

NOT TO SCALE

MDH REV. 10/30/08
9/19/08
86002SRS.DWG

PRELIMINARY

NO.	DATE	APPR.	REVISION	NO.	DATE	APPR.	REVISION

SOIL REMEDIATION SYSTEM

WIX FILTRATION CORPORATION — **DILLON, SOUTH CAROLINA**

DRAWN BY: M. HYRE	PROJECT ENGINEER: H. SARTAIN
DESIGN ENGINEER: T. HARBAGE	PROJECT MANAGER: M. EASTERBROOK

ERM

NOT FOR CONSTRUCTION

CONSTRUCTION DETAILS

SCALE: AS NOTED	DATE: SEPTEMBER 22, 2008
PROJECT NO.: 0086002	AutoCAD 2007: 86002SRS.DWG

DRAWING NO. **D-1**

REV. NO.

SHEET **5** OF **6**

LEGEND:

- 8' FLUORESCENT LIGHT
- 20A, 125V, 3W RECEPTACLE (NEMA 5-20R)
- THERMOSTAT
- OUTDOOR FLOOD LIGHT
- CONDUIT RUN EXPOSED
- S — SINGLE POLE SWITCH

ELECTRICAL NOTES

1. All general purpose duplex receptacles to be 20 Amp GFCI, both exterior and interior. Mounting height shall be 24" AFF to center of device. Exterior receptacles shall have a metallic in use cover.
2. All general purpose light switches shall be 20 Amp. Mounting height shall be 48" AFF to center of device.
3. Fluorescent fixtures to be eight feet 2 Lite 120 Volt, and equipped with a disconnecting means in each fixture for both phase and neutral conductors.
4. Conduit shall be type EMT with steel fittings, except where RMC is specified. All horizontal conduit runs shall be fastened by means of Unistrut channel (or equal) spaced a maximum of four feet apart.
5. All conductors shall be type THHN/THWN 19 strand copper.
6. Electrician to provide and install a motor starter for the SVE Blower. Starter and protective devices (heaters) shall be sized per the NEC, Article 430.

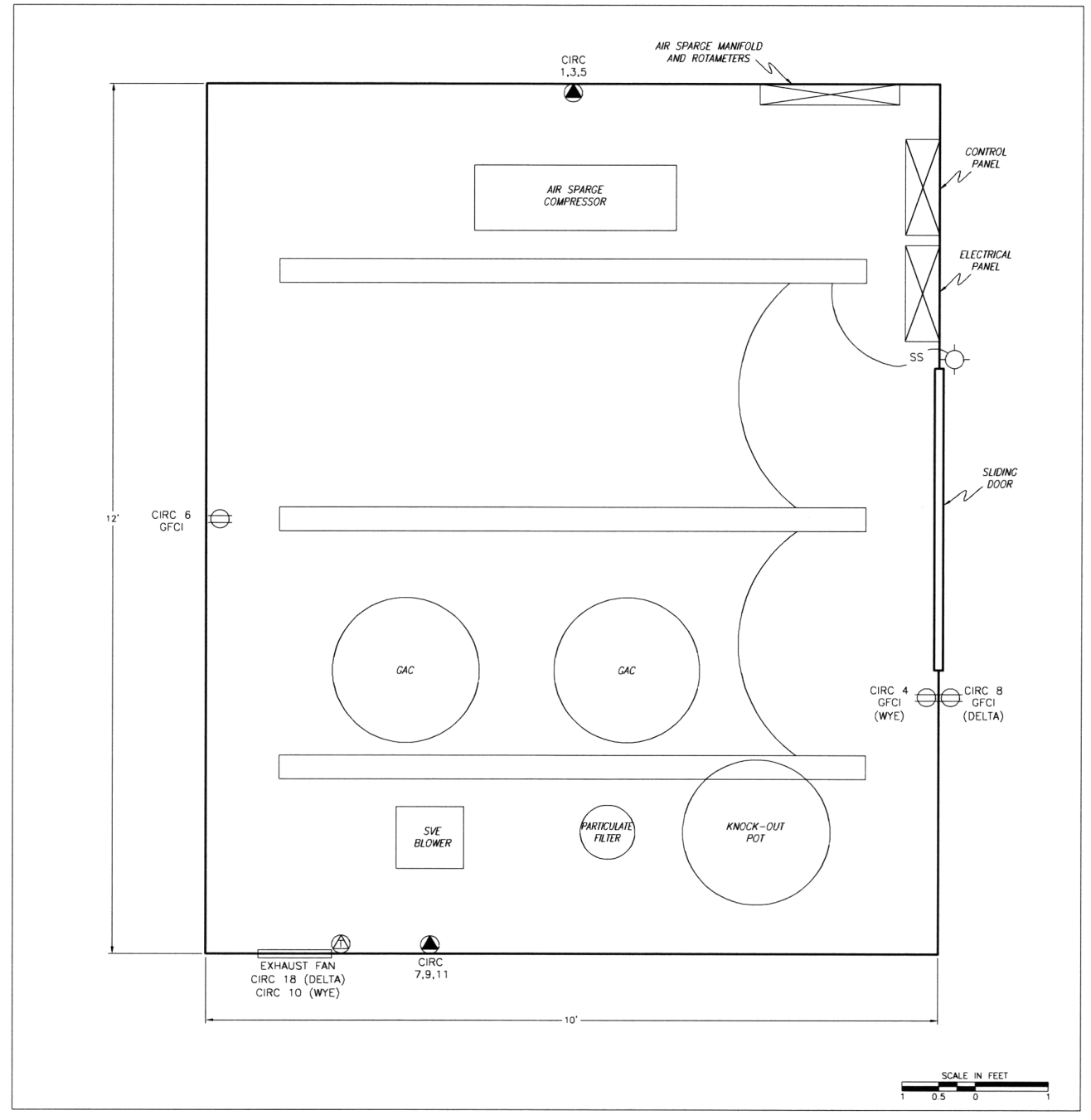

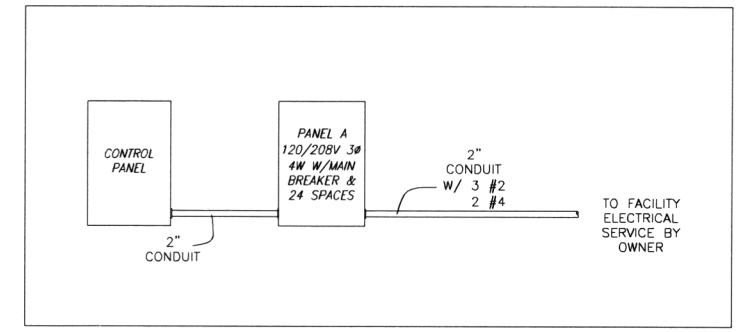

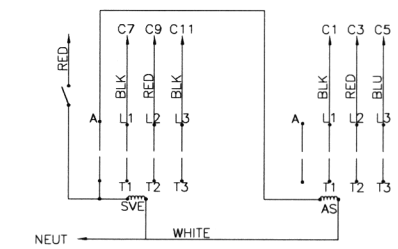

LOGIC: SWITCH S1 STARTS SVE BLOWER. AUXILLARY CONTACT STARTS AIR SPARGE COMPRESSOR.

NOTE: LOAD SIDE OF CONTROL RELAY CONNECIONS NOT DRAWN. ASSUME STARTER WITH OVERLOAD DEVICES AT UNIT. IF NOT, USE STARTERS HERE IN LIEU OF RELAYS

COLOR: CONDUCTORS COLORED FOR WYE SYSTEM 208/120V IF DELTA SYSTEM USED COLORS SHALL BE AS FOLLOWS

A – BLACK
B – ORANGE
C – RED

DELTA PANEL LAYOUT

PANEL A Main Lug Delta

MAIN:	VOLTAGE: 120/208	AMP: 100	PHASE: 3	WIRE: 4	CIRCUITS: 24		MOUNTING:		
CIRCUIT NO.	DESCRIPTION	TRIP	COND	AWG	CIRCUIT NO.	DESCRIPTION	TRIP	COND	AWG
1	Air Sparge Compressor	30	0.75	10	2	Lighting	20	0.50	12
3	Air Sparge Compressor	30	0.75	10	4	Not Used	--	--	--
5	Air Sparge Compressor	30	0.75	10	6	Interior GFCI Receptacle	20	0.50	12
7	SVE Blower	20	0.50	12	8	Interior GFCI Receptacle	20	0.50	12
9	SVE Blower	20	0.50	12	10	Not Used	--	--	--
11	SVE Blower	20	0.50	12	12	Exterior Receptacle	20	0.50	12
					14	Control Circuit	15	0.50	14
					16	Not Used	--	--	--
					18	Exhaust Fan	20	0.50	12

NOTE: A green, full size ground conductor shall be installed with each single or multiwire branch circuit. Panel is Delta connected - B phase may not be used for 120V branch circuit.

WYE PANEL LAYOUT

PANEL A Main Lug Wye

MAIN:	VOLTAGE: 120/208	AMP: 100	PHASE: 3	WIRE: 4	CIRCUITS: 24		MOUNTING:		
CIRCUIT NO.	DESCRIPTION	TRIP	COND	AWG	CIRCUIT NO.	DESCRIPTION	TRIP	COND	AWG
1	Air Sparge Compressor	30	0.75	10	2	Lighting	20	0.50	12
3	Air Sparge Compressor	30	0.75	10	4	Interior GFCI Receptacle	20	0.50	12
5	Air Sparge Compressor	30	0.75	10	6	Interior GFCI Receptacle	20	0.50	12
7	SVE Blower	20	0.50	12	8	Exterior Receptacle	20	0.50	12
9	SVE Blower	20	0.50	12	10	Exhaust Fan	20	0.50	12
11	SVE Blower	20	0.50	12	12	Control Circuit	15	0.50	14

NOTE: A green, full size ground conductor shall be installed with each single or multiwire branch circuit

PRELIMINARY

NO.	DATE	APPR.	REVISION	NO.	DATE	APPR.	REVISION

SOIL AND GROUND WATER REMEDIATION SYSTEM

WIX FILTRATION CORPORATION — **DILLON, SOUTH CAROLINA**

DRAWN BY: M. HYRE
PROJECT ENGINEER: H. SARTAIN
DESIGN ENGINEER: T. HARBAGE
PROJECT MANAGER: M. EASTERBROOK

ERM

NOT FOR CONSTRUCTION

ELECTRICAL PLAN

SCALE: 1"=2'
DATE: SEPTEMBER 22, 2008
PROJECT NO.: 0086002
AutoCAD 2007: 86002SRS.DWG

DRAWING NO.: **E-1**
REV. NO.:
SHEET 6 OF 6

MDH REV 10/28/08 1730
86002SRS.DWG 9/23/08